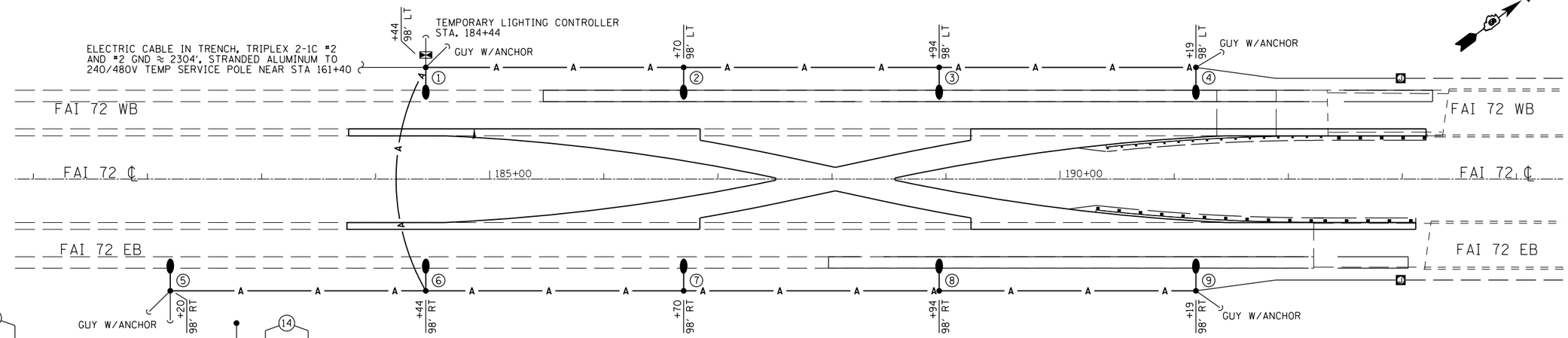

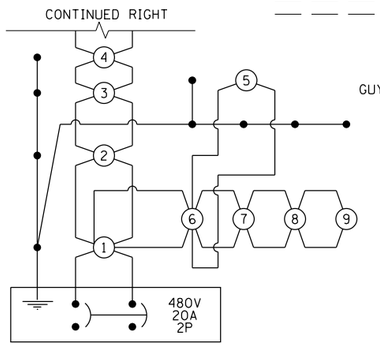

CIRCUIT DIAGRAM

WB CROSSING

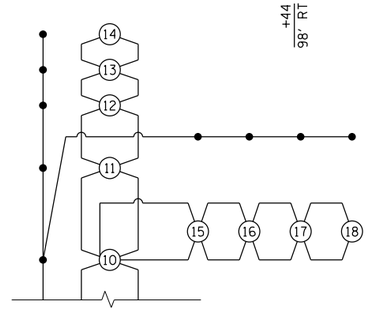

LEGEND

- TEMPORARY LIGTING UNIT, 50 FT WOOD POLE, CLASS 3, WITH 250W HPS MULT-MOUNT LUMINAIRE
- TEMPORARY LIGHTING CONTROLLER
- JUNCTION BOX
- —A— AERIAL CABLE, 2-1C NO. 4 ALUMINUM WITH MESSAGE WIRE
- CONDUIT ATTACHED TO STRUCTURE, 2" DIA. RGS WITH ELECTRIC CABLE IN CONDUIT, TRIPLEX 2-1C, AND #4 GND, STRANDED ALUMINUM
- ELECTRIC CABLE IN TRENCH, TRIPLEX 2-1C #2, AND #2 GND, STRANDED ALUMINUM
- DISCONNECT SWITCH, NONFUSED, 30 AMP, 480V, 2P

NOTES:

1. POLE HEIGHT SHALL BE INCREASED AS NECESSARY TO MAINTAIN REQUIRED CLEARANCE OF AERIAL CABLE OVER ROADWAY.
2. GUYS AND ANCHORS ARE SHOWN AS AN EXAMPLE AND SHALL BE INSTALLED AS NECESSARY TO THE SATISFACTION OF THE ENGINEER.
3. TEMPORARY WOOD POLES SHALL BE SET BACK A MINIMUM OF 30 FT FROM EXISTING EDGE OF PAVEMENT AND OUTSIDE CLEAR ZONE.

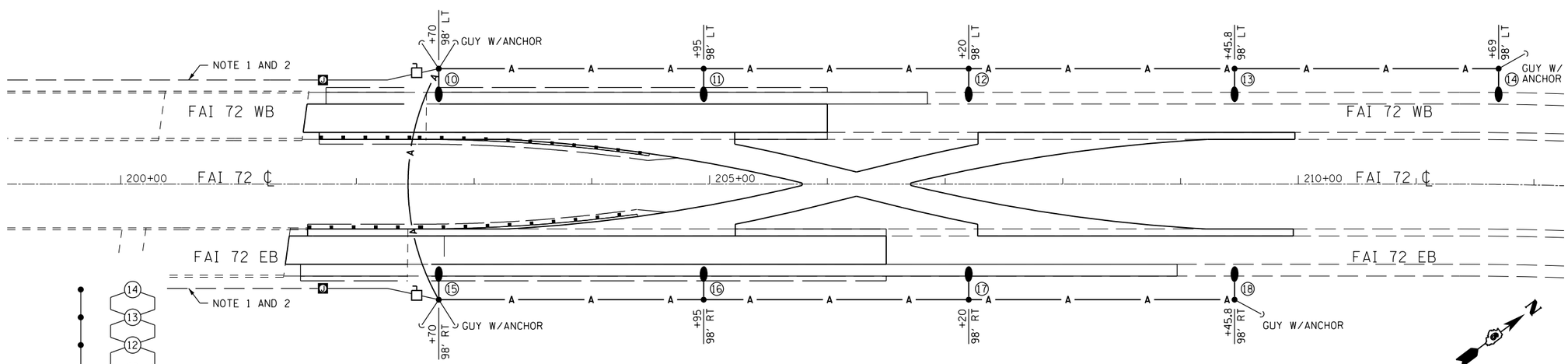

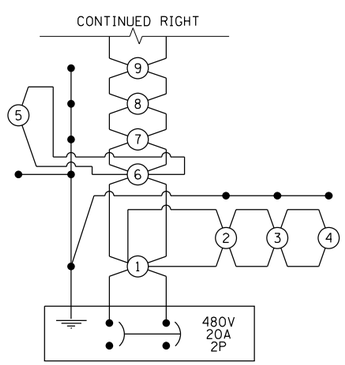

CIRCUIT DIAGRAM

EB CROSSING

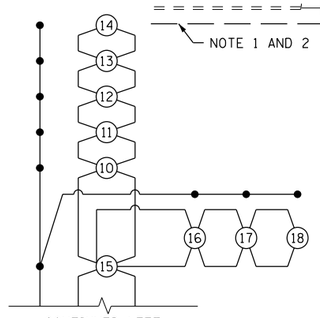

QUANTITIES			
CODE NO.	ITEM DESCRIPTION	UNIT	QTY.
X8410102	TEMPORARY LIGHTING SYSTEM	L SUM	1

NOTES:

1. CONDUIT, CABLES, JUNCTION BOXES, AND DISCONNECT SWITCH SHALL BE RELOCATED OR INSTALLED/REMOVED ON OPPOSITE BRIDGE STRUCTURE AS REQUIRED FOR STAGE CONSTRUCTION. NO ADDITIONAL PAYMENT WILL BE MADE FOR THIS WORK.
2. THE EAST CORSSOVER LIGHTING SHALL BE FED FROM EITHER THE WB BRIDGE OR THE EB BRIDGE BASED ON CONSTRUCTION STAGING. BOTH FEEDS SHALL NOT BE CONNECTED AT THE SAME TIME. SEE CIRCUIT DIAGRAMS FOR MORE DETAILS.

0' 50' 100'

USER NAME = sparksgw	DESIGNED -	REVISED -
	DRAWN - BDM	REVISED -
PLOT SCALE = 100.0000 ' / in.	CHECKED - JSA	REVISED -
PLOT DATE = Jun-08-2011 09:44:16AM	DATE - 7/15/09	REVISED -

STATE OF ILLINOIS
DEPARTMENT OF TRANSPORTATION

LIGHTING PLAN

SCALE: | SHEET NO. OF SHEETS | STA. TO STA.

F.A.I. RTE.	SECTION	COUNTY	TOTAL SHEETS	SHEET NO.
1-72	(84-10-1)I-7	SANGAMON	41	21

CONTRACT NO. 72E51

ILLINOIS FED. AID PROJECT

FILE NAME = c:\pw_work\pwidot\sparksgw\d0271411\D672E51_sht_light.dgn