CONTROL POINT #100 (IRON ROD W/CAP)

N =14,045,283.692
E =2,451,478.950
ELEV. = 409.230

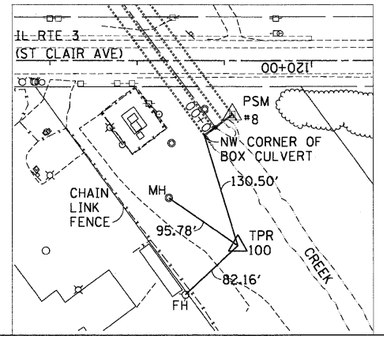

CONTROL POINT #101 (IRON ROD W/CAP)

N = 14,047,349.416
E = 2,451,873.863
ELEV. = 401.580

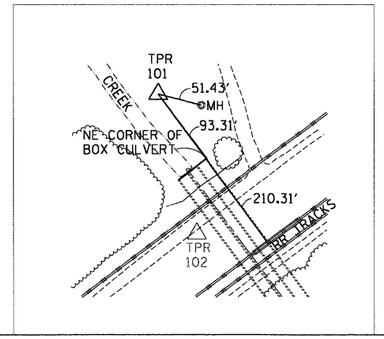

CONTROL POINT #102 (IRON ROD W/CAP)

N = 14,047,204.910
E = 2,451,791.600
ELEV. = 414.750

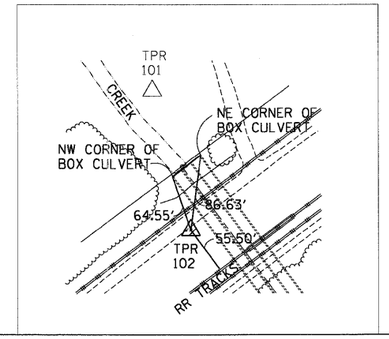

CONTROL POINT #103 (IRON ROD W/CAP)

N = 14,047,344.143
E = 2,450,990.211
ELEV. = 414.820

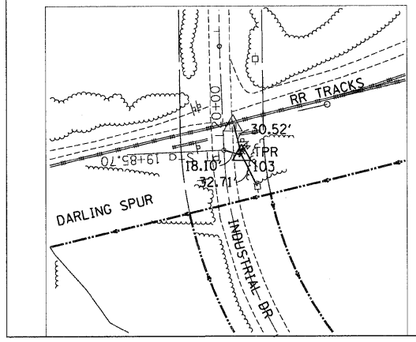

CONTROL POINT #200 (IRON ROD W/CAP)

N = 14,044,316.431
E = 2,452,780.630
ELEV. = 416.990

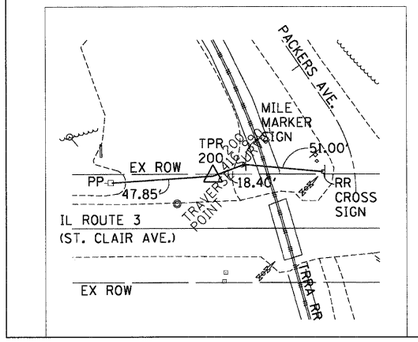

CONTROL POINT #201 (PK NAIL)

N = 14,044,584.131
E = 2,452,924.827
ELEV. = 417.190

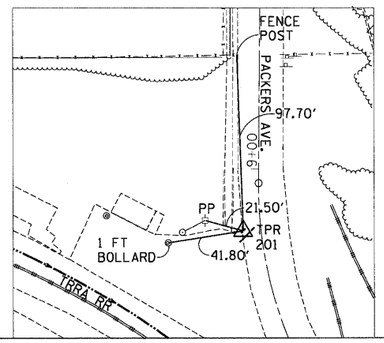

CONTROL POINT #202 (COTTON PICKER SPINDLE)

N = 14,045,420.418
E = 2,453,793.293
ELEV. = 416.310

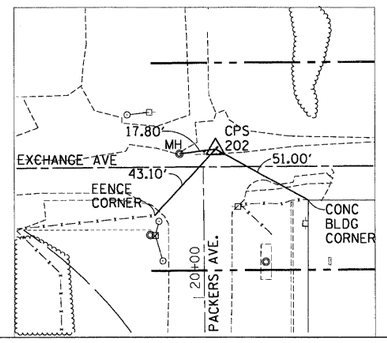

CONTROL POINT #203 (IRON ROD W/CAP)

N = 14,044,007.578
E = 2,455,154.610
ELEV. = 416.500

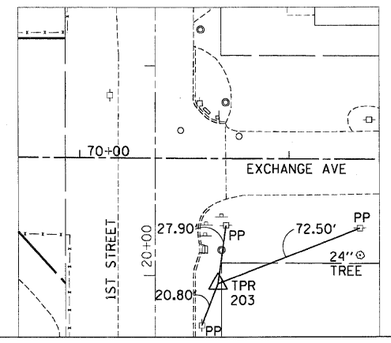

CONTROL POINT #204 (IRON ROD W/CAP)

N = 14,042,993.287
E = 2,454,026.962
ELEV. = 420.970

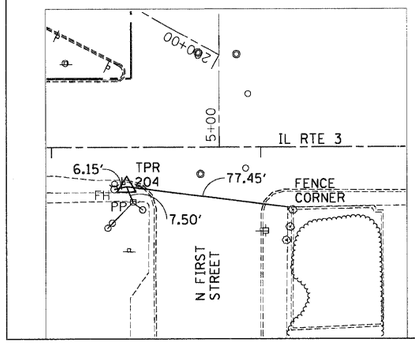

CONTROL POINT #300 (IRON ROD W/CAP)

N = 14,043,700.040
E = 2,453,387.437
ELEV. = 418.970

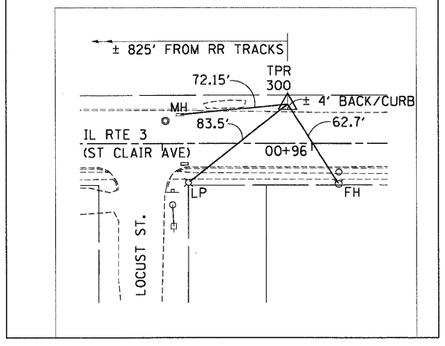

CONTROL POINT #301 (IRON ROD W/CAP)

N = 14,044,929.344
E = 2,453,314.775
ELEV. = 416.620

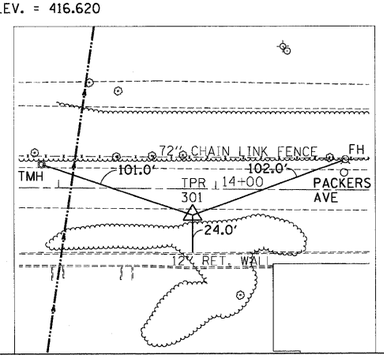

CONTROL POINT #302 (CUT CROSS)

N = 14,045,018.363
E = 2,454,200.089
ELEV. = 418.840

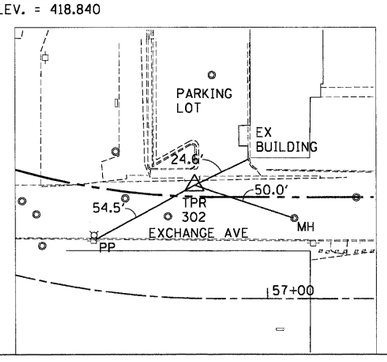

CONTROL POINT #303 (IRON ROD W/CAP)

N = 14,044,427.212
E = 2,454,660.603
ELEV. = 418.290

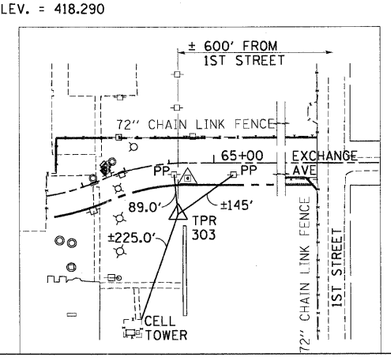

CONTROL POINT #304 (IRON ROW W/CAP)

N = 14,043,517.419
E = 2,454,575.981
ELEV. = 418.660

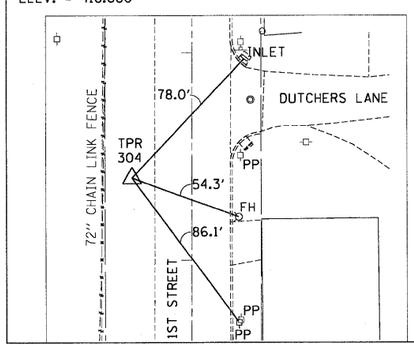

FILE NAME = $FILEL$	USER NAME = $USER$	DESIGNED - JB	REVISED -	STATE OF ILLINOIS DEPARTMENT OF TRANSPORTATION RELOCATED ILLINOIS ROUTE 3	ALIGNMENTS, TIES & BENCHMARKS 8	F.A.P. RTE.	SECTION	COUNTY	TOTAL SHEETS	SHEET NO.
		DRAWN - JB	REVISED -			998	82-2-1HVB-1	ST. CLAIR	345	27
TENG & ASSOCIATES, INC. ENGINEERS/ARCHITECTS/PLANNERS CHICAGO, ILLINOIS	PLOT SCALE = $SCALE$	CHECKED - ACL	REVISED -					CONTRACT NO. 76D05		
	PLOT DATE = $DATE$	DATE - 05/13/11	REVISED -		SCALE: 1"=200' / SHEET NO. 8 OF 8 SHEETS / STA. / TO STA.	FED. ROAD DIST. NO.	ILLINOIS	FED. AID PROJECT		

..\DBCONN-99-MOTIF1.DGN, ..\DBCONN-10-BORDER1.DGN, ..\DBCONN-99-LAYOUT1.DGN, ..\DBCONN-99-ALIGNMENT2.DGN, ..\DBCONN-03-GEOMETRIC1.DGN, ..\DBCONN-03-TOPO1.DGN
5-11-2011, 10:52:03 NEWMANMD \\FS-0044\AM\VAULT_D-TRANS_87-2202\20868-00\CIVIL\CAD\99 ALL CONTRACTS\CONN\SHEETS CONTRACT 10\DBCONN-10-SHT-ALIGNTIEBM8.DGN