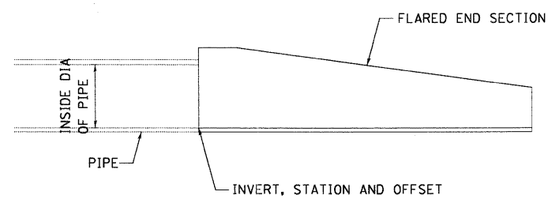

NOTE:
ALL PIPE STATIONS, OFFSETS, AND INVERTS ARE MEASURED FROM WHERE THE PIPE MEETS THE END SECTION

END SECTION CALL OUT DETAIL

N.T.S.

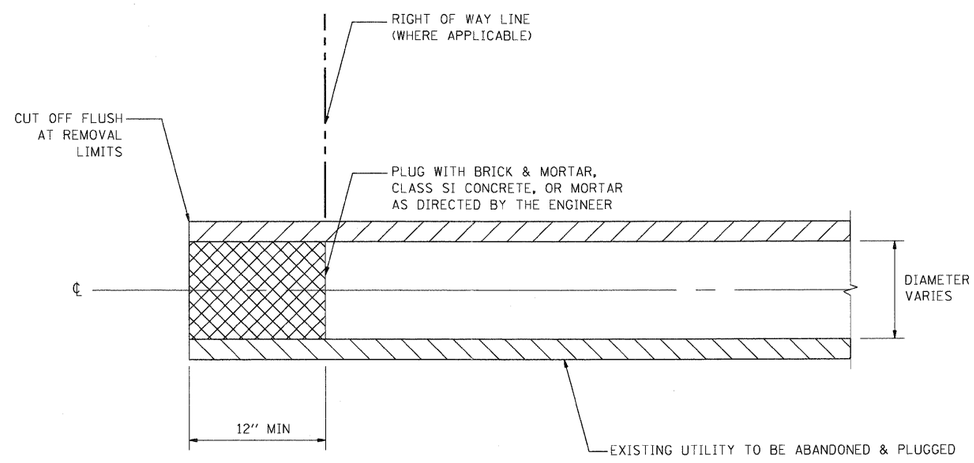

NOTE:

1. THIS WORK SHALL BE CONSIDERED AS INCLUDED IN THE CONTRACT UNIT PRICE BID FOR THE UTILITY REMOVAL ITEMS.

UTILITY PLUG DETAIL

N.T.S.

..\DBCONN-10-BORDER1.DGN
5-11-2011,11:02:41 NEWMANMD \\VS-0244\AMVVAULT\D-TRANS_07\22022\20868-001\CIVIL\CAD\99 ALL CONTRACTS\CONN\SHEETS CONTRACT 10\DBCONN-10-S-IT-DRAINAGE4.DGN

FILE NAME = $FILEL$	USER NAME = $USER$	DESIGNED - MFM	REVISED -	STATE OF ILLINOIS DEPARTMENT OF TRANSPORTATION	DRAINAGE DETAILS END SECTION & SEWER PLUG DETAIL	F.A.P. RTE.	SECTION	COUNTY	TOTAL SHEETS	SHEET NO.
		DRAWN - MFM	REVISED -			998	82-2-1HVB-1	ST. CLAIR	345	71
TENG TENG & ASSOCIATES, INC. ENGINEERS/ARCHITECTS/PLANNERS CHICAGO, ILLINOIS	PLOT SCALE = $SCALE$	CHECKED - TKL	REVISED -	RELOCATED ILLINOIS ROUTE 3				CONTRACT NO. 76D05		
	PLOT DATE = $DATE$	DATE - 05/13/11	REVISED -		SCALE: N.T.S. SHEET NO. 1 OF 5 SHEETS STA. TO STA.	FED. ROAD DIST. NO.	ILLINOIS	FED. AID PROJECT		