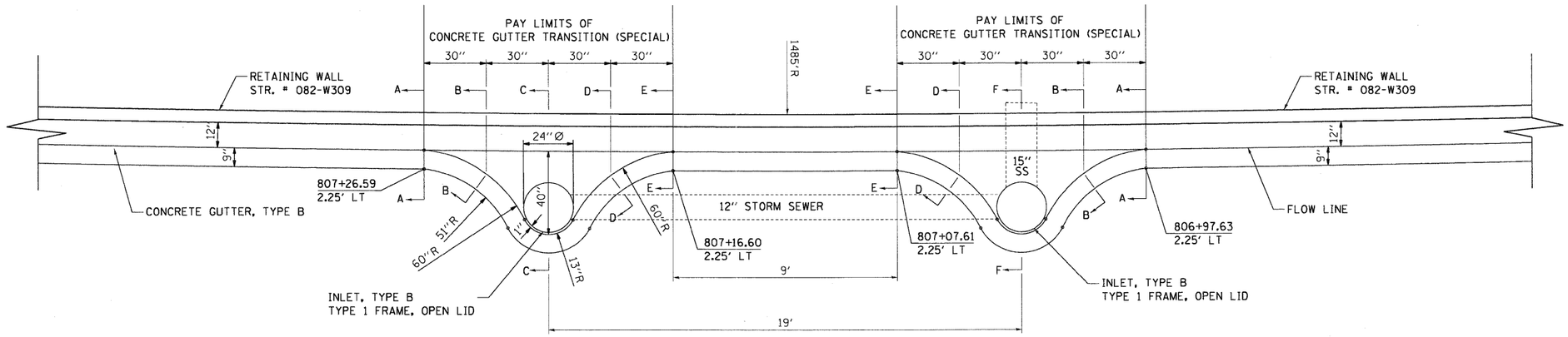

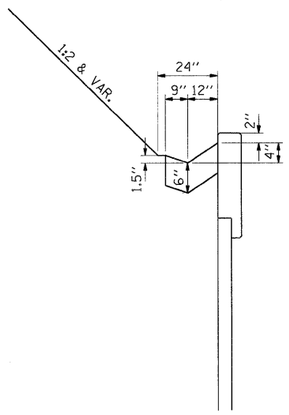

SECTIONS A-A & E-E

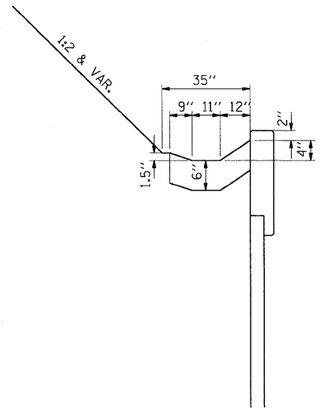

SECTIONS B-B & D-D

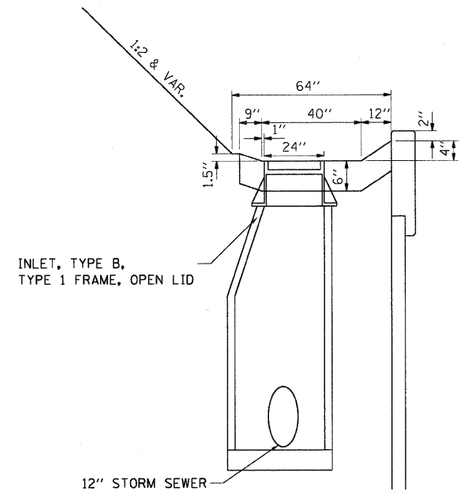

SECTION C-C

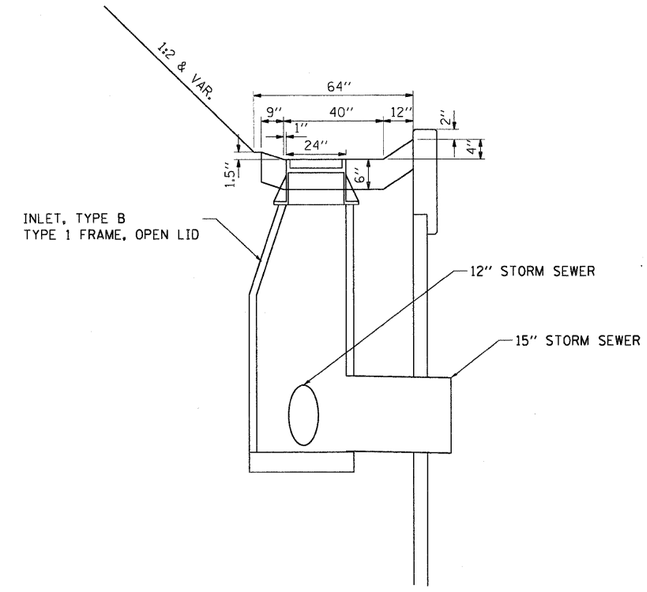

SECTION F-F

NOTES

1. FOR DRAINAGE STRUCTURE STAIONS, OFFSETS, & ELEVATIONS, SEE SHEETS 63 & 65.
2. STRUCTURE STA./OFF. AND RIM ELEVATIONS ARE TAKEN AT THE CENTER OF THE STRUCTURE PER SHEET 72.
3. ALL VERTICAL ELEVATIONS ARE DRAWN AT A 1H:2V SCALE.
4. TIE BARS ARE NOT REQUIRED FOR THE CONCRETE GUTTER, TYPE B AS INDICATED ON IDOT HWY STDS.

..\DBCONN-10-BORDER.DGN,..\DBCONN-10-MOTIF.DGN,..\DBCONN-10-SHT-TYPICAL3.DGN,..\DBCONN-10-SHT-DRAINAGE6.DGN
5-11-2011,11:03:02 NEWMANMD \\FS-0044\AM\VAULT_D-TRANS.07\2202\20868-001\CIVIL\CAD\99 ALL CONTRACTS\CONN\SHEETS CONTRACT 10\DBCONN-10-SHT-DRA

FILE NAME = $FILEL$	USER NAME = $USER$	DESIGNED - JB	REVISED -	STATE OF ILLINOIS DEPARTMENT OF TRANSPORTATION RELOCATED ILLINOIS ROUTE 3	DRAINAGE DETAILS TYPE B GUTTER TRANSITION 1	F.A.P. RTE.	SECTION	COUNTY	TOTAL SHEETS / SHEET NO.
		DRAWN - JB	REVISED -			998	82-2-1HVB-1	ST. CLAIR	345 / 73
TENG & ASSOCIATES, INC. ENGINEERS/ARCHITECTS/PLANNERS CHICAGO, ILLINOIS	PLOT SCALE = $SCALE$	CHECKED - TKL	REVISED -					CONTRACT NO. 76D05	
	PLOT DATE = $DATE$	DATE - 05/13/11	REVISED -		SCALE: N.T.S. / SHEET NO. 3 OF 5 SHEETS / STA. / TO STA.	FED. ROAD DIST. NO.	ILLINOIS	FED. AID PROJECT	