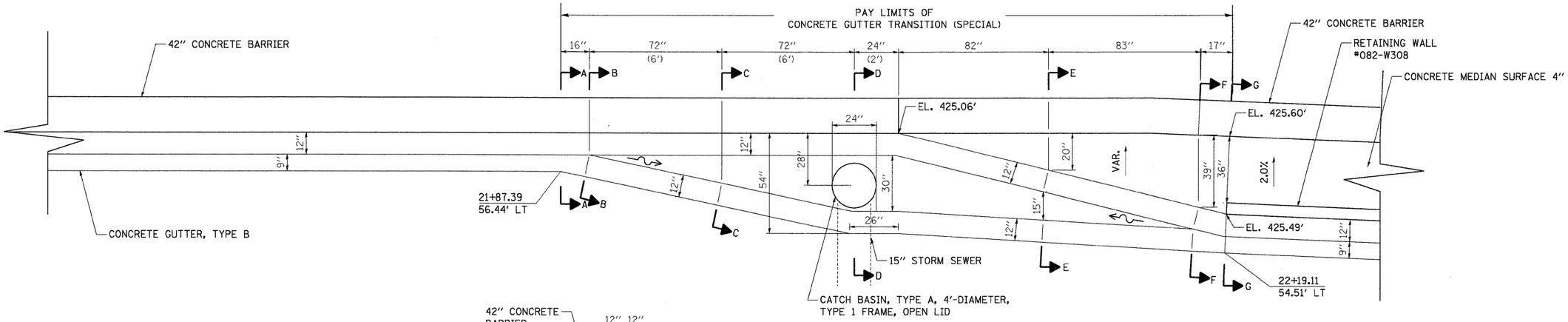

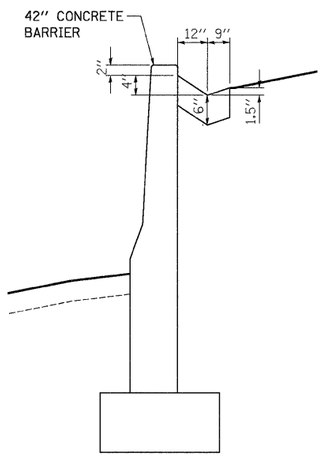

SECTION A-A

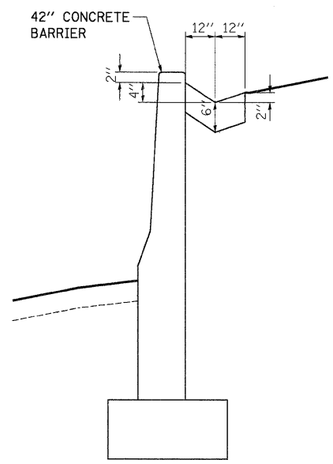

SECTION B-B

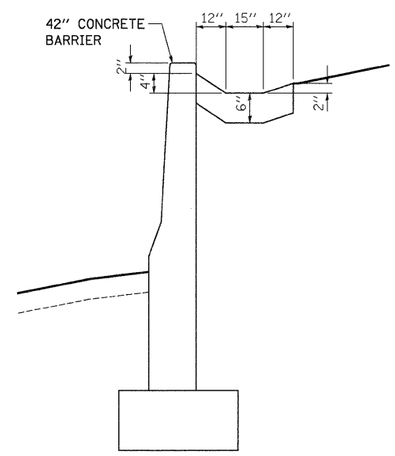

SECTION C-C

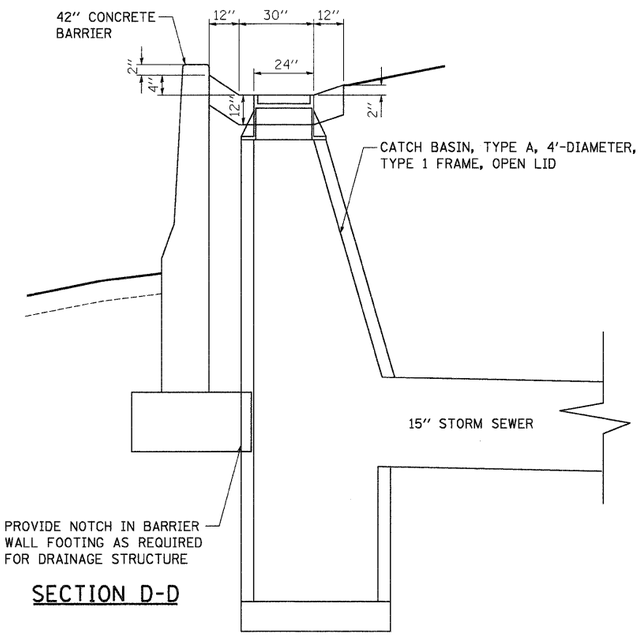

SECTION D-D

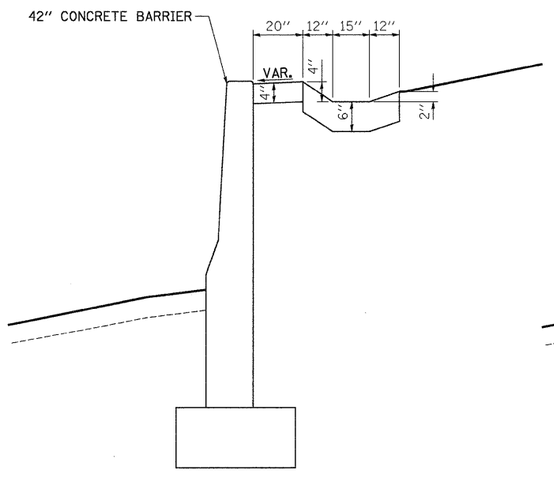

SECTION E-E

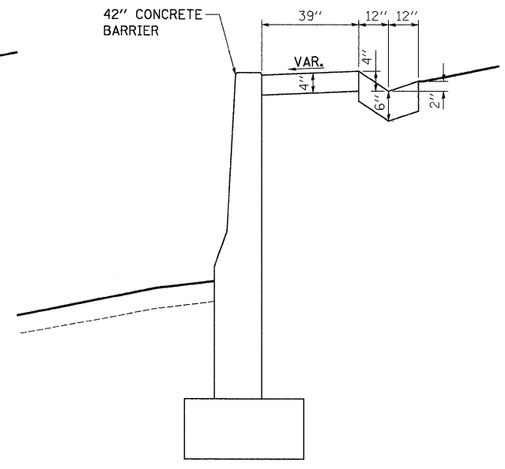

SECTION F-F

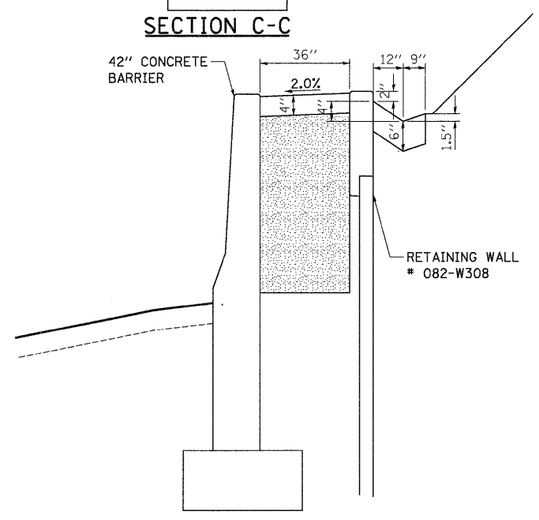

SECTION G-G

NOTES

1. FOR DRAINAGE STRUCTURE STAIONS, OFFSETS, & ELEVATIONS, SEE SHEETS 63 & 65.
2. STRUCTURE STA./OFF. AND RIM ELEVATIONS ARE TAKEN AT THE CENTER OF THE STRUCTURE PER SHEET 72.
3. ALL VERTICAL ELEVATIONS ARE DRAWN AT A 1H:2V SCALE.
4. TIE BARS ARE NOT REQUIRED FOR THE CONCRETE GUTTER, TYPE B AS INDICATED ON IDOT HWY STDS.

..\D8CONN-10-BORDER.DGN ..\D8CONN-10-MOTIF.DGN
6-27-2011, 14:05:48 BONDHUJO \\FS-0044\GM\VAULT\D-TRANS_07\2202\20868-001\CIVIL\CAD\99 ALL CONTRACTS\CONN\SHEETS CONTRACT 10\D8CONN-10-SHT-DRAINAGE9.DGN

FILE NAME = $FILEL$	USER NAME = $USER$	DESIGNED - JB	REVISED -
		DRAWN - JB	REVISED -
	PLOT SCALE = $SCALE$	CHECKED - TKL	REVISED -
TENG & ASSOCIATES, INC. ENGINEERS/ARCHITECTS/PLANNERS CHICAGO, ILLINOIS	PLOT DATE = $DATE$	DATE - 05/13/11	REVISED -

STATE OF ILLINOIS
DEPARTMENT OF TRANSPORTATION
RELOCATED ILLINOIS ROUTE 3

DRAINAGE DETAILS
TYPE B GUTTER TRANSITION 3

SCALE: N.T.S. | SHEET NO. 5 OF 5 SHEETS | STA. | TO STA.

F.A.P. RTE.	SECTION	COUNTY	TOTAL SHEETS	SHEET NO.
998	82-2-1HVB-1	ST. CLAIR	345	75
		CONTRACT NO. 76D05		
FED. ROAD DIST. NO.	ILLINOIS	FED. AID PROJECT		