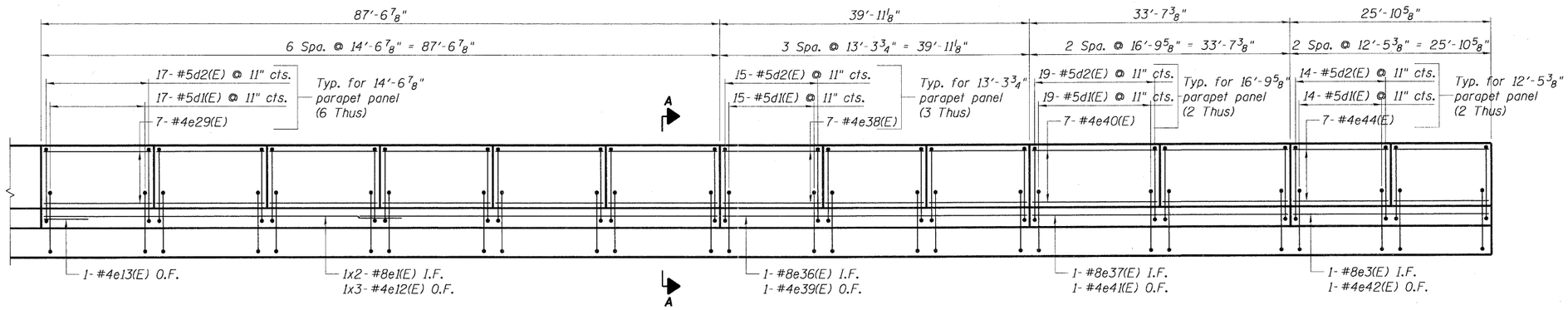

PARAPET INSIDE ELEVATION - UNIT 4

REINFORCEMENT TABLE

Mark	Reinforcement	Note
L	9x3- #5b1(E) @ 12" cts. Top & Bott.	(1)
M	2- #5b1(E) @ 12" cts. Top & Bott.	(1) Flare
N	3- #5b1(E) @ 12" cts. Top & Bott.	(1) Flare
O	12- #5b1(E) @ 12" cts. Top & Bott.	(1)
P	12- #5b10(E) @ 12" cts. Top & Bott.	(1) (3)
Q	7- #6a18(E) @ 10" cts. Top 6- #5a17(E) @ 12" cts. Bott.	
R	4- #5b1(E) @ 12" cts. Top & Bott.	(1) Flare

Reinforcing Bar Notes:

(1) Bars shall be sprung in place to be concentrically placed at the spacing noted in curved area of the Slab.
(2) Bars shall be placed radially at the spacing noted in curved area of the Slab.
(3) Cut bars according to Cutting Diagram, Sht. 135.

Notes:

For Notes, see Sht. 125.

MIN. LAP LENGTHS (unless noted otherwise)	
#4	2'-1"
#5	2'-7"
#6	3'-1"
#8	5'-5"

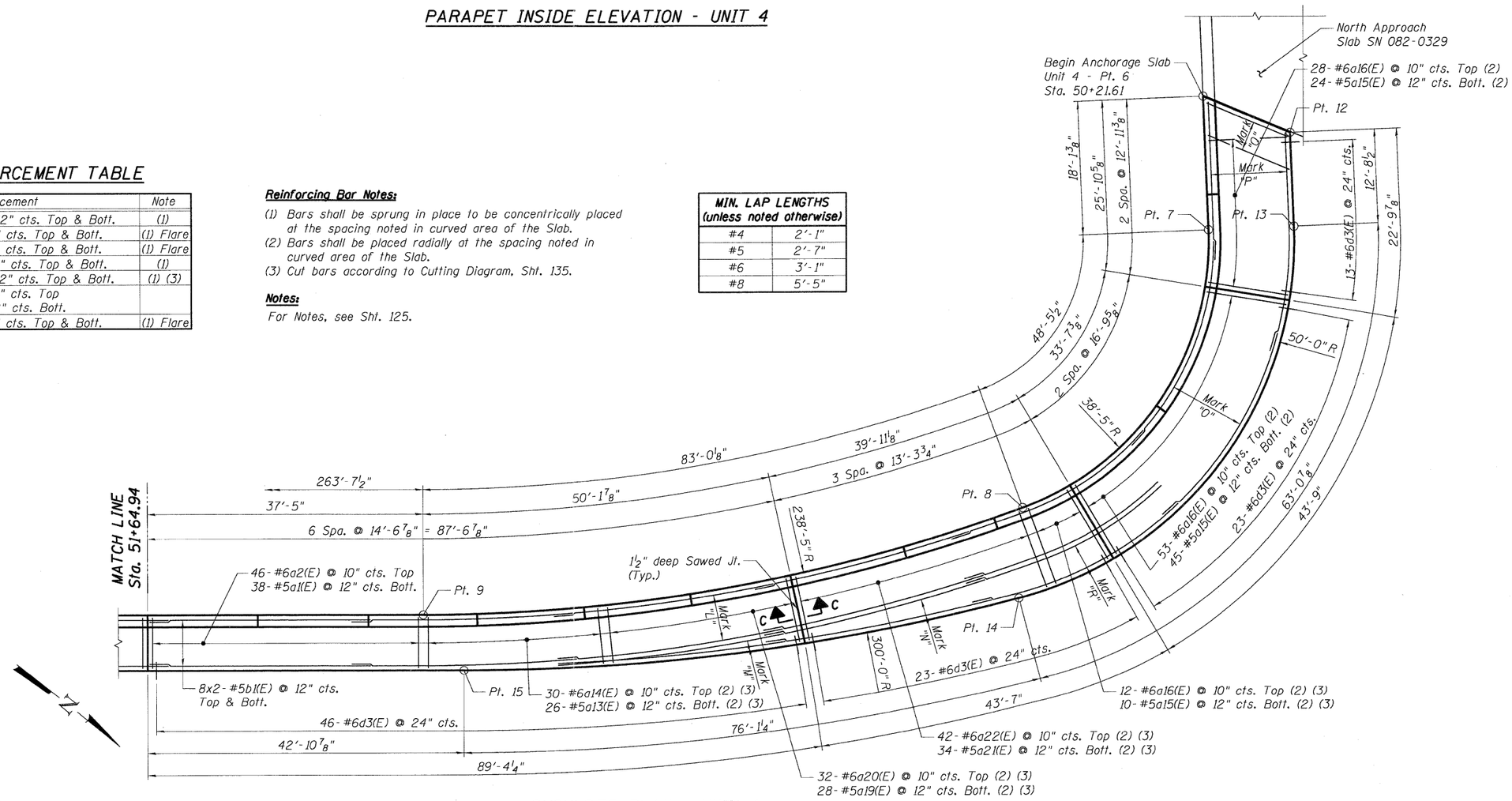

SHOULDER PLAN - UNIT 4

FILE NAME = $FILE$	USER NAME = $USER$	DESIGNED - TCG	REVISED -
		DRAWN - TCG	REVISED -
	PLOT SCALE = $SCALE$	CHECKED - JLR	REVISED -
	PLOT DATE = $DATE$	DATE - 05/13/11	REVISED -

TENG & ASSOCIATES, INC. ENGINEERS/ARCHITECTS/PLANNERS CHICAGO, ILLINOIS

STATE OF ILLINOIS
DEPARTMENT OF TRANSPORTATION
RELOCATED ILLINOIS ROUTE 3

PLAN & ELEVATION – UNIT 4
2 OF 2

SCALE: | SHEET NO. OF SHEETS | STA. TO STA.

F.A.P. RTE.	SECTION	COUNTY	TOTAL SHEETS	SHEET NO.
998	82-2-1HVB-1	ST. CLAIR	345	133
		CONTRACT NO. 76D05		
FED. ROAD DIST. NO.	ILLINOIS	FED. AID PROJECT		

..\DBCONN-10 DESIGN.DGN, ..\DBCONN-10 BORDER.DGN, ..\DBCONN-10 DESIGNLOGN, ..\082O329-CONN-10-001-AP.DGN
5-11-2011, 9:51:51 NEWMANND \\V5-0244\MMV\MULTI-TRANS.07\2202\20868-001\STRUCT\CAD\01 DESIGN\MOMENTS.08\SHEET\DBCONN-10 SHT-PLAN4-S022.DGN