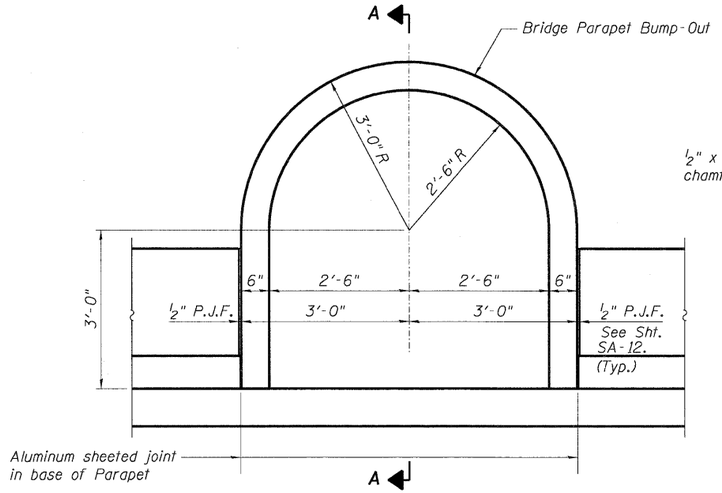

COMMUNITY ICON PARAPET ELEVATION

(Outside Face Shown)

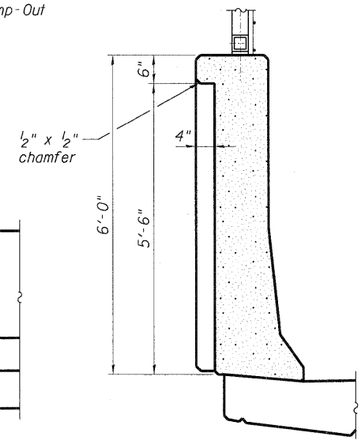

SECTION A-A

Notes:

1. See Sheet SA-14 for Bar List and Bill of Material.
2. I.F. denotes Inside Face
   O.F. denotes Outside Face
   E.F. denotes Each Face

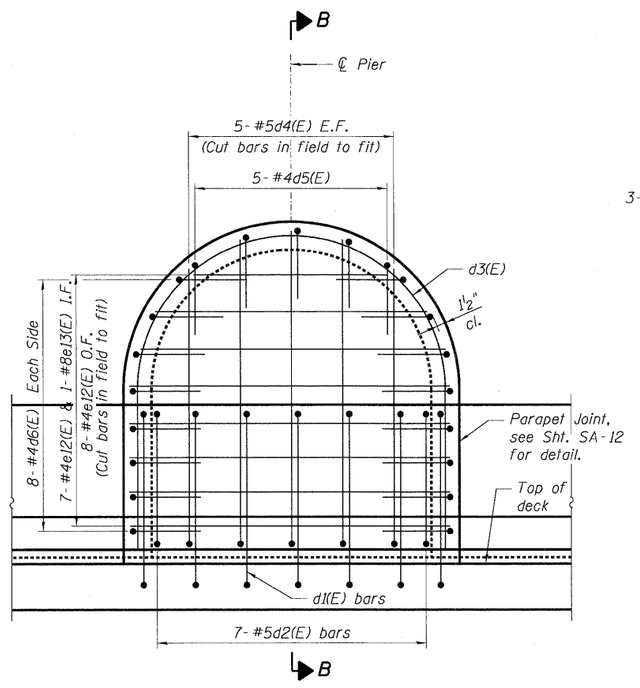

DETAIL 1

(See Community Icon Parapet Elevation for dimensions)
(Inside Face Shown)

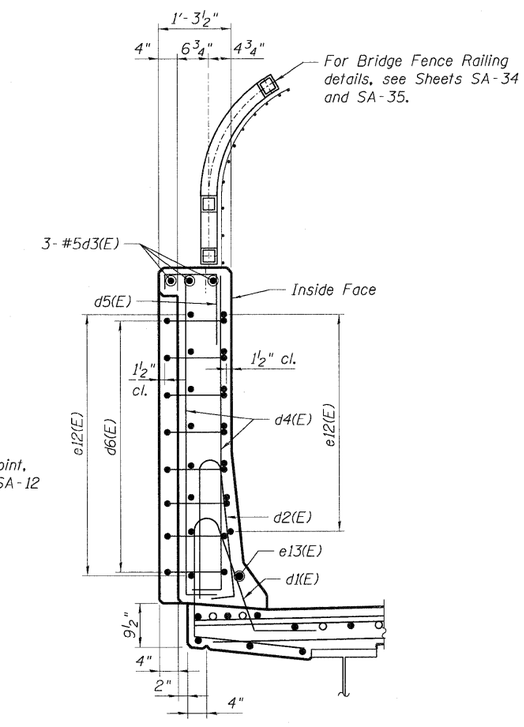

SECTION B-B

FILE NAME = $FILEL$	USER NAME = $USER$	DESIGNED - JLR	REVISED -	STATE OF ILLINOIS DEPARTMENT OF TRANSPORTATION IL 3 OVER I-70	PARAPET DETAILS	F.A.P RTE.	SECTION	COUNTY	TOTAL SHEETS	SHEET NO.
		DRAWN - FD	REVISED -			998	82-2-1HVB-1	ST. CLAIR	345	148
TENG & ASSOCIATES, INC. ENGINEERS/ARCHITECTS/PLANNERS CHICAGO, ILLINOIS	PLOT SCALE = $SCALE$	CHECKED - JRH	REVISED -			SN 082-0328		CONTRACT NO. 76D05		
	PLOT DATE = $DATE$	DATE - 05/13/11	REVISED -		SCALE: SHEET NO. SA-13 OF SA-57 STA. 1683+43.17 TO STA.	FED. ROAD DIST. NO.	ILLINOIS	FED. AID PROJECT		

..\0828328-CONN-10-002-SHT-SLIDGN,..\0828328-CONN-10-001-SLIDGN,..\0828318-CONN-19-001-BDLDGN,..\0828328-CONN-10-001-SLIDGN,..\0828328-CONN-10-001-SLIDGN,..\0828328-CONN-10-001-SLIDGN,..\0828328-CONN-10-003-SHT-SLIDGN
5-11-2011, 9:52:54 NEWMANMD \\FS-0044\VOL\VAULT_D-TRANS_07\2282\20868-001\STRUCT\CAD\01 DESIGN\0828328\SHEET\0828328-CONN-10-007-SHT-SLIDGN