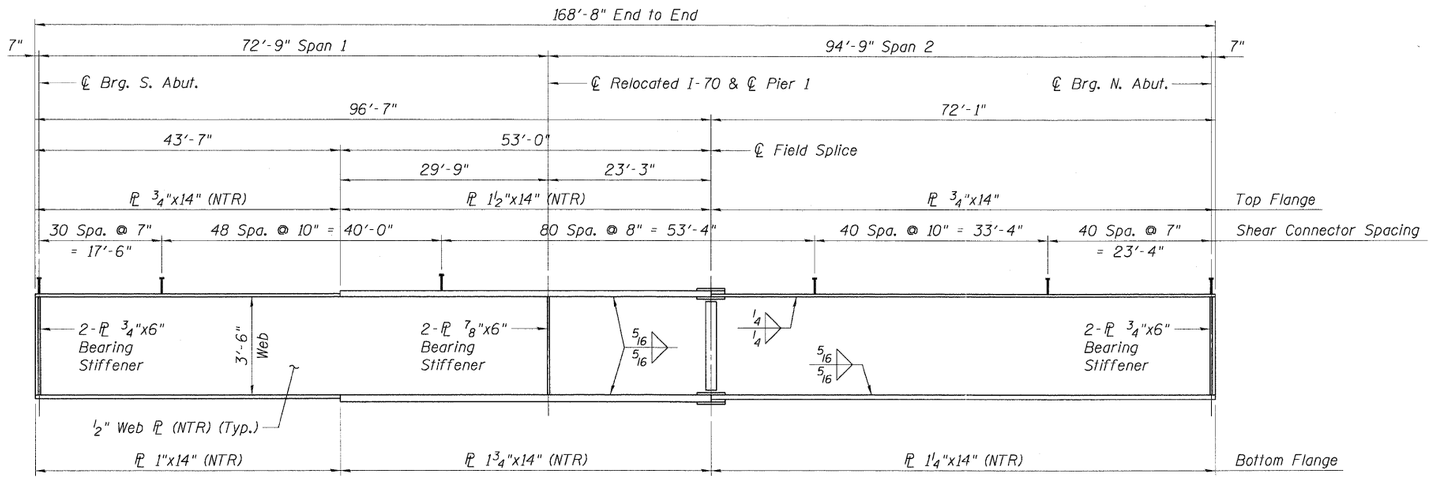

GIRDER ELEVATION

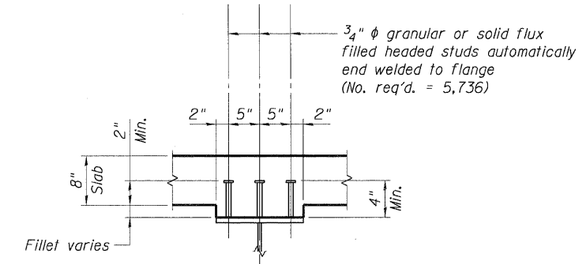

SHEAR CONNECTOR DETAIL

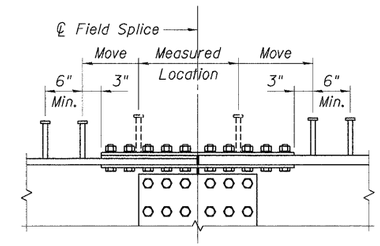

SHEAR CONNECTOR DETAIL AT SPLICES

DO NOT place shear connectors on splice plates.
Move row of studs to 3" beyond nearest edge of splice plate from measured location.

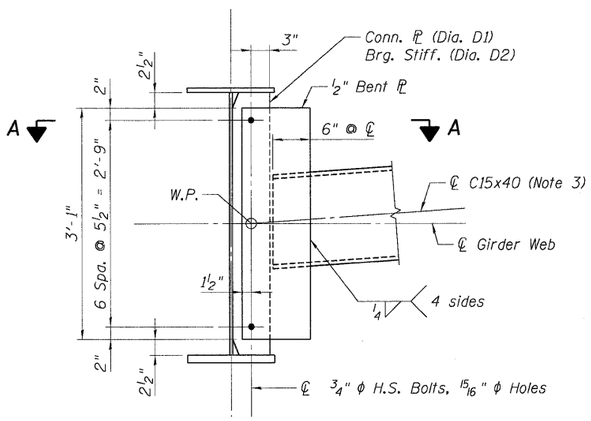

DIAPHRAGMS D1 AND D2

(35 D1, 7 D2 Required)

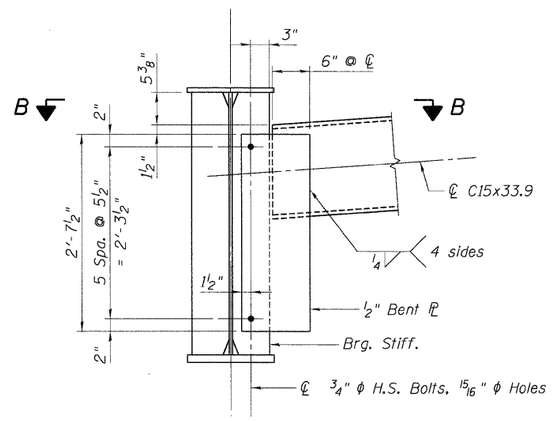

DIAPHRAGM D3

(14 Required)

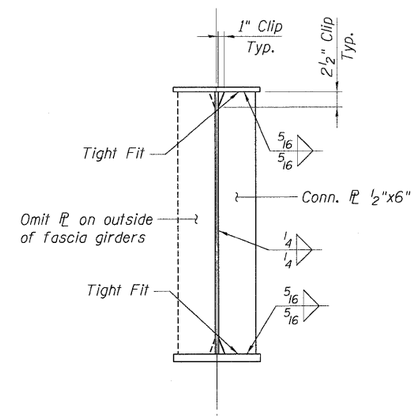

DIAPHRAGM CONNECTION PLATE DETAIL

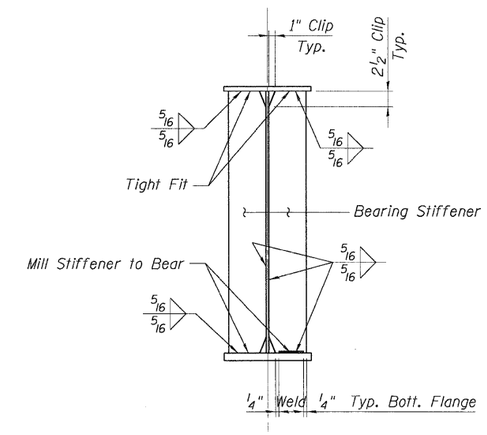

BEARING STIFFENER DETAIL

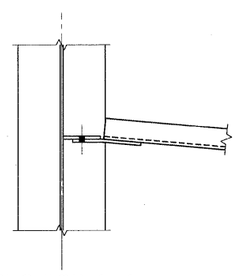

SECTION A-A

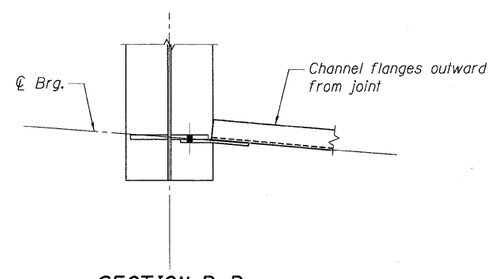

SECTION B-B

NOTES:

1. All structural steel shall be AASHTO M 270 Grade 50 except diaphragms, fill plates, and shim plates shall be Grade 36.
2. Load carrying components designated "NTR" shall conform to the Supplemental Requirements for Notch Toughness, Zone 2.
3. Alternate channels C15x50 are permitted for Diaphragms D1 and D2 to facilitate material acquisition. Calculated weight of structural steel is based on C15x40 sections. The alternate, if utilized, shall be provided at no extra cost to the Department.
4. Two hardened washers required for each set of oversized holes.

..\0820318-CONN-99-001-BLDGN, ..\0820328-CONN-10-001-GE.DGN, ..\0820328-CONN-10-001-GF.DGN
5-11-2011, 9:53:13 NEWMANMD \\FS-0044\DAV\VAULT_D-TRANS.07\202\20868-001\S\RUCT\CADD\01 DESIGN\0820328\SHEET\0820328-CONN-10-001-SHT-GE.DGN

FILE NAME = $FILEL$	USER NAME = $USER$	DESIGNED - CCE	REVISED -	STATE OF ILLINOIS DEPARTMENT OF TRANSPORTATION IL 3 OVER I-70	GIRDER ELEVATION	F.A.P RTE.	SECTION	COUNTY	TOTAL SHEETS	SHEET NO.
		DRAWN - CCE	REVISED -			998	82-2-1HVB-1	ST. CLAIR	345	154
	PLOT SCALE = $SCALE$	CHECKED - JLR	REVISED -			SN 082-0328		CONTRACT NO. 76D05		
TENG & ASSOCIATES, INC. ENGINEERS/ARCHITECTS/PLANNERS CHICAGO, ILLINOIS	PLOT DATE = $DATE$	DATE - 05/13/11	REVISED -		SCALE: SHEET NO. SA-19 OF SA-57 STA. 1683+43.17 TO STA.	FED. ROAD DIST. NO.	ILLINOIS	FED. AID PROJECT		