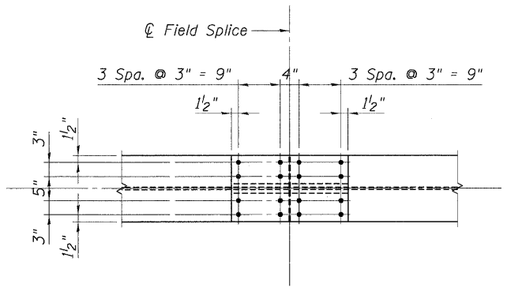

TOP FLANGE

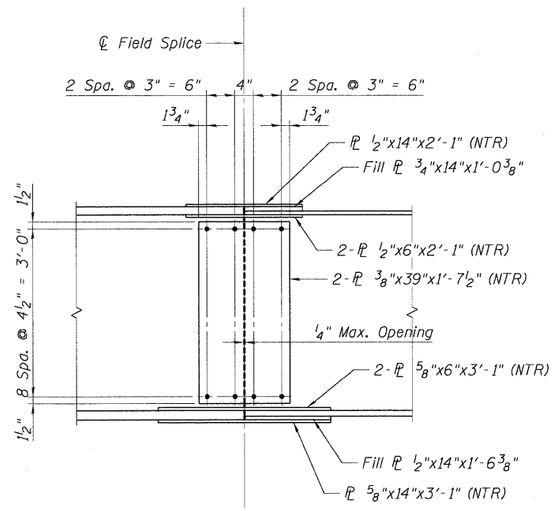

FIELD SPLICE ELEVATION

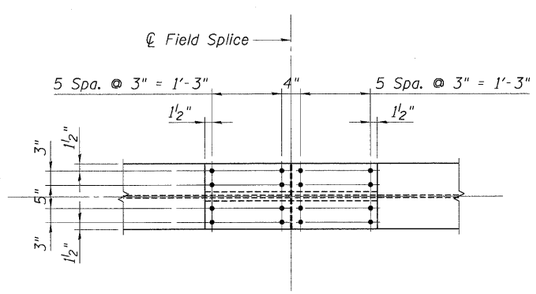

BOTTOM FLANGE

EXTERIOR GIRDER MOMENT TABLE

		0.4 Span 1	Pier 1	0.6 Span 2
Is	(in4)	14,229	24,661	15,587
Ic (n)	(in4)	36,787		41,726
Ic (3n)	(in4)	27,233		30,378
Ic (cr)	(in4)		29,665	
Ss	(in3)	700	1,144	816
Sc (n)	(in3)	969		1,122
Sc (3n)	(in3)	891		1,033
Sc (cr)	(in3)		1,225	
DC1	(k/ft)	0.979	1.050	0.990
M DC1	(k-ft)	209	1,069	653
DC2	(k/ft)	0.126	0.126	0.164
M DC2	(k-ft)	19	152	116
DW	(k/ft)	0.388	0.388	0.388
M DW	(k-ft)	90	391	262
M LL+IM	(k-ft)	1,023	1,420	1,395
Mu (Strength I)	(k-ft)	2,210	4,598	3,796
ϕf Mn	(k-ft)	4,931		5,534
fs DC1	(ksi)	3.6	11.2	9.6
fs DC2	(ksi)	0.3	1.5	1.3
fs DW	(ksi)	1.2	3.8	3.0
fs LL+IM	(ksi)	12.7	13.9	14.9
fs (Service II)	(ksi)	21.5	34.6	33.4
0.95 Rh Fyf	(ksi)	47.5	47.5	47.5
fs Total (Strength I)	(ksi)	28.8	46.0	44.4
ϕf Fn	(ksi)		50.0	
Vf	(k)	58.9	56.6	56.9

INTERIOR GIRDER REACTION TABLE

		S. Abut.	Pier 1	N. Abut.
R DC1	(k)	23.8	119.1	39.3
R DC2	(k)	2.5	15.4	6.2
R DW	(k)	8.8	42.0	14.3
R LL+IM	(k)	86.8	159.6	93.6
R Total	(k)	121.9	336.1	153.3

Is, Ss: Noncomposite moment of inertia and section modulus of the steel section used for computing fs (Strength I and Service II) due to noncomposite dead loads

Ic (n), Sc (n): Composite moment of inertia and section modulus of the steel and deck based upon the modular ratio, n, used for computing fs (Strength I and Service II) in uncracked sections due to short-term composite live loads

Ic (3n), Sc (3n): Composite moment of inertia and section modulus of the steel and deck based upon 3 times the modular ratio, 3n, used for computing fs (Strength I and Service II) in uncracked sections due to long-term composite (superimposed) dead loads

Ic (cr), Sc (cr): Composite moment of inertia and section modulus of the steel and longitudinal deck reinforcement used for computing fs (Strength I and Service II) in cracked sections due to both short-term composite live loads and long-term composite dead loads

DC1: Unfactored noncomposite dead load

M DC1: Unfactored moment due to noncomposite dead load

DC2: Unfactored long-term composite (superimposed excluding future wearing surface) dead load

M DC2: Unfactored moment due to long-term composite (superimposed excluding future wearing surface) dead load

DW: Unfactored long-term composite (superimposed future wearing surface only) dead load

M DW: Unfactored moment due to long-term composite (superimposed future wearing surface only) dead load

M LL+IM: Unfactored moment due to live load plus dynamic load allowance (impact)

Mu (Strength I): Factored design moment
1.25 [(M DC1) + (M DC2)] + 1.5 (M DW) + 1.75 (M LL+IM)

ϕf Mn: Compact composite positive moment capacity computed according to Article 6.10.7.1

fs DC1: Unfactored stress at outside face of controlling steel flange due to vertical noncomposite dead loads as calculated below
(M DC1) / Ss

fs DC2: Unfactored stress at outside face of controlling steel flange due to vertical composite dead loads as calculated below
(M DC2) / [Sc (3n)] or (M DC2) / [Sc (cr)] as applicable

fs DW: Unfactored stress at outside face of controlling steel flange due to vertical composite future wearing surface loads as calculated below
(M DW) / [Sc (3n)] or (M DW) / [Sc (cr)] as applicable

fs LL+IM: Unfactored stress at outside face of controlling steel flange due to vertical composite live plus impact loads as calculated below
(M LL+IM) / [Sc (n)] or (M LL+IM) / [Sc (cr)] as applicable

fs (Service II): Sum of stresses as computed below
(fs DC1) + (fs DC2) + (fs DW) + 1.3 (fs LL+IM)

0.95 Rh Fyf: Composite stress capacity for Service II loading according to Article 6.10.4.2

fs Total (Strength I): Sum of stresses as computed below
1.25 [(fs DC1) + (fs DC2)] + 1.5 (fs DW) + 1.75 (fs LL+IM)

ϕf Fn: Composite factored flexural resistance of controlling flange for Strength I loading according to Article 6.10.7.2 or 6.10.8

Vf: Maximum vertical fatigue shear force range under Fatigue I load combination computed according to Article 6.10.10

NOTES:

1. All structural steel shall be AASHTO M 270 Grade 50 except diaphragms, fill plates, and shim plates shall be Grade 36.
2. Load carrying components designated "NTR" shall conform to the Supplemental Requirements for Notch Toughness, Zone 2.