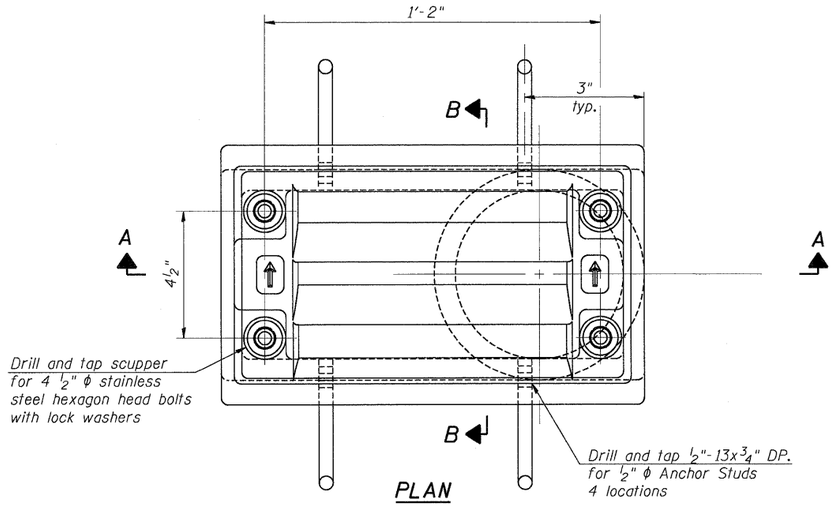

PLAN

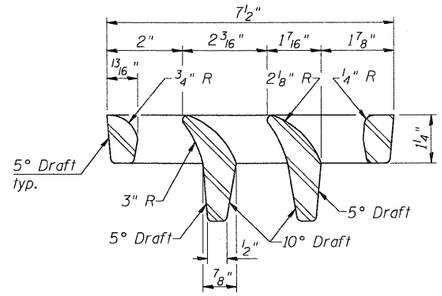

VANE GRATE DETAIL

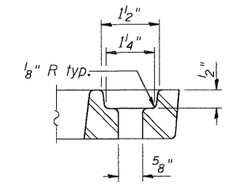

BOLT HOLE DETAIL

Notes:

All cast iron parts shall be gray iron conforming to the requirements of AASHTO M 105, Class 35B.

Bolts, anchor studs, washers and nuts shall conform to the requirements of ASTM A 307 and shall be galvanized according to AASHTO M 232.

Downspouts located on the exterior side of a painted steel fascia beam shall be painted with the finish coat specified for the exterior side of the fascia beam.

As an alternate, bolts, anchor studs, washers and nuts may be stainless steel according to Article 1006.29(d) of the Standard Specifications.

Structural steel weldments of equal sections and of the same configuration may be substituted for the cast iron scupper frame. Fillet or full penetration welds shall be used for the weldments. Details shall be submitted to the Engineer for approval. Structural steel weldments shall not be substituted for the cast iron scupper grate. Structural steel frames and downspouts shall be galvanized according to AASHTO M111.

The Contractor shall take appropriate measures to assure that Protective Coat is not applied to the scupper.

Cost of the Grate, Frame, Downspout, Anchor Studs, Bolts, Washers and Nuts including complete installation of the scupper shall be paid for at the contract unit price each for Drainage Scupper, DS-11.

Alternate fiberglass downspout conforming to ASTM D 2996 with a short-time rupture strength hoop tensile stress of 30,000 psi min. may be used in lieu of the cast iron or steel equivalent.

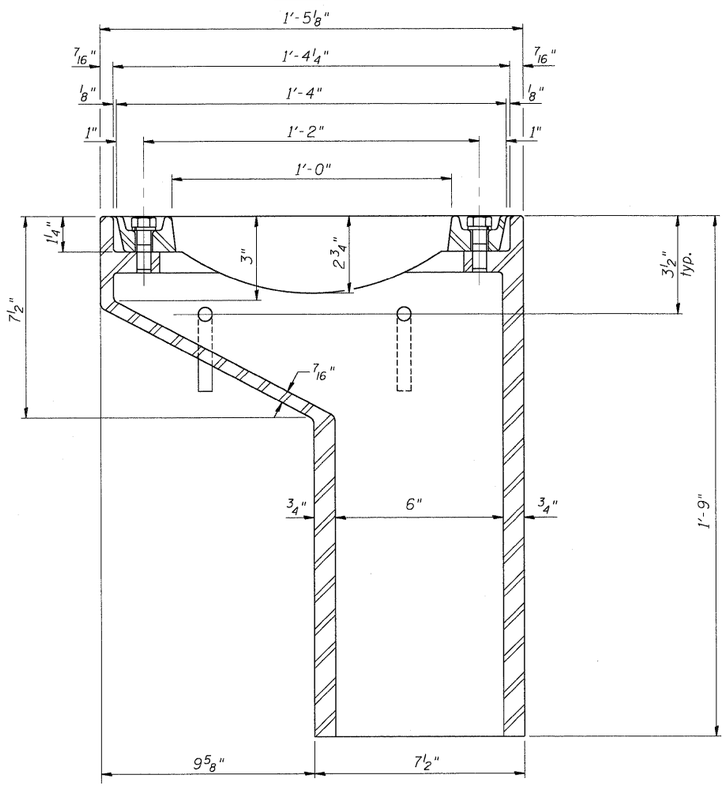

SECTION A-A

See sheet SA-9 for scupper location relative to parapet.

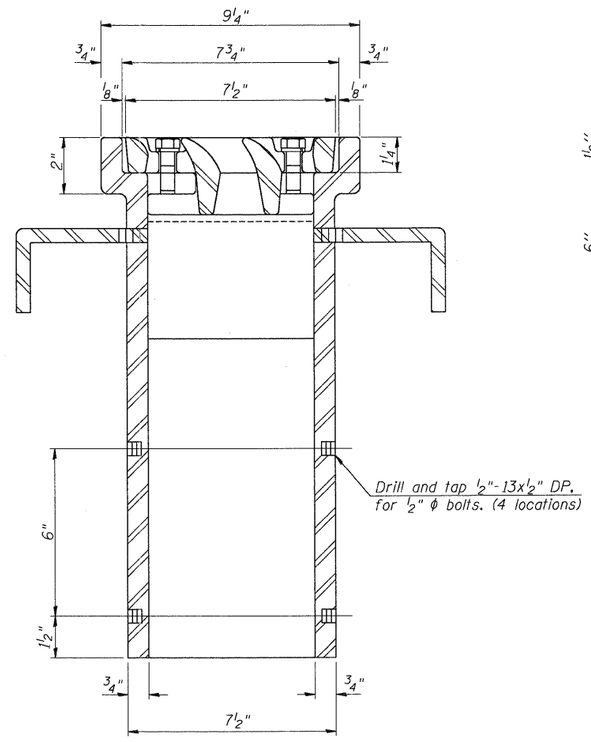

SECTION B-B

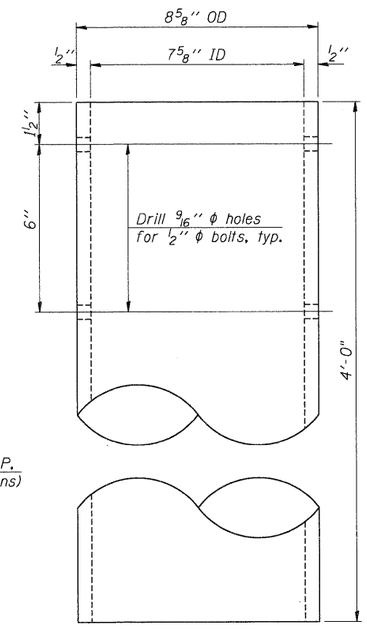

DOWNSPOUT

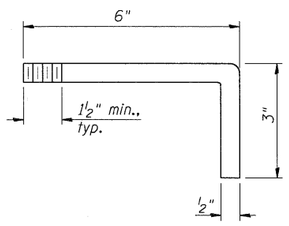

ANCHOR STUD DETAIL

BILL OF MATERIAL

ITEM	UNIT	QUANTITY
Drainage Scupper, DS-11	Each	4

DS-11 7-1-10

FILE NAME = $FILEL$	USER NAME = $USER$	DESIGNED -	REVISED -
		DRAWN - TCG	REVISED -
	PLOT SCALE = $SCALE$	CHECKED - JLR	REVISED -
TENG TENG & ASSOCIATES, INC. ENGINEERS/ARCHITECTS/PLANNERS CHICAGO, ILLINOIS	PLOT DATE = $DATE$	DATE - 05/13/11	REVISED -

STATE OF ILLINOIS
DEPARTMENT OF TRANSPORTATION
IL 3 OVER I-70

DRAINAGE SCUPPER, DS-11

SCALE: | SHEET NO. SA-33 OF SA-57 | STA. 1683+43.17 TO STA.

F.A.P RTE.	SECTION	COUNTY	TOTAL SHEETS	SHEET NO.
998	82-2-1HVB-1	ST. CLAIR	345	168
	SN 082-0328	CONTRACT NO. 76D05		
FED. ROAD DIST. NO.	ILLINOIS	FED. AID PROJECT		

..\0820316_CONN-99-001-BD.DGN 5-11-2011, 4:54:01 NEWMANMD \\FS-0844\ANYVAULT.D-TRANS.07\2202\20868 001\STRUCTURAL\CAD\01 DESIGN\0820328\SHEET\0820328-CONN-10 004 SHT-MS.DGN