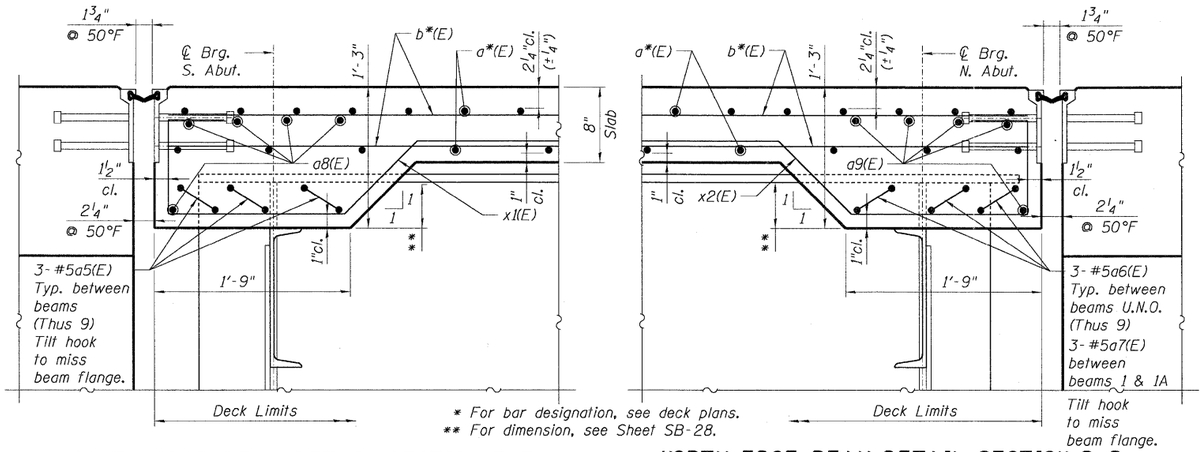

SOUTH EDGE BEAM DETAIL SECTION E-E

(Horiz. dim. @ Rt. L's)

NORTH EDGE BEAM DETAIL SECTION D-D

(Horiz. dim. @ Rt. L's)

Notes:

1. For Bar List and Bill of Material, see Sheet SB-19.
2. For section E-E and D-D locations, see Sheets SB-10 & SB-11.

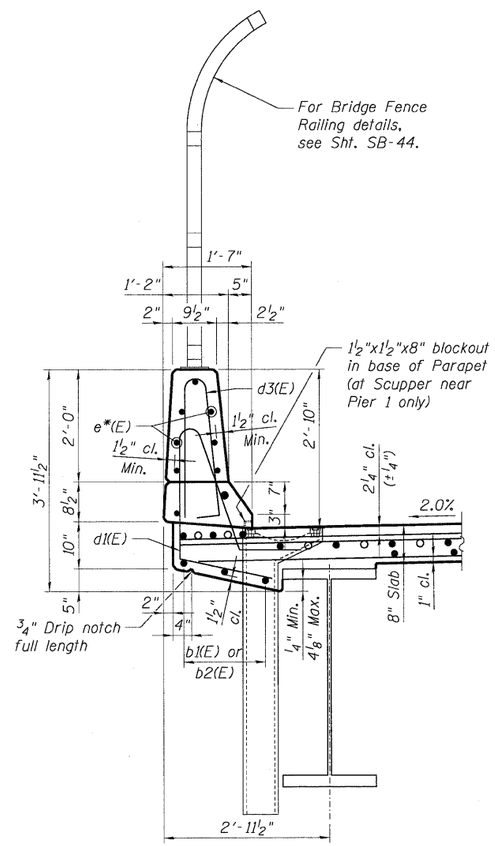

WEST PARAPET SECTION

Looking North

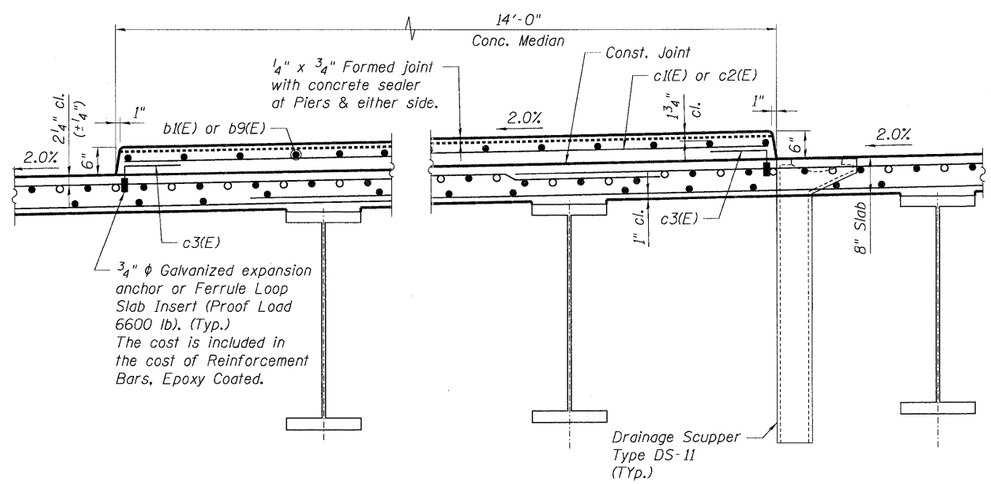

CONCRETE MEDIAN DETAIL SECTION

Looking North

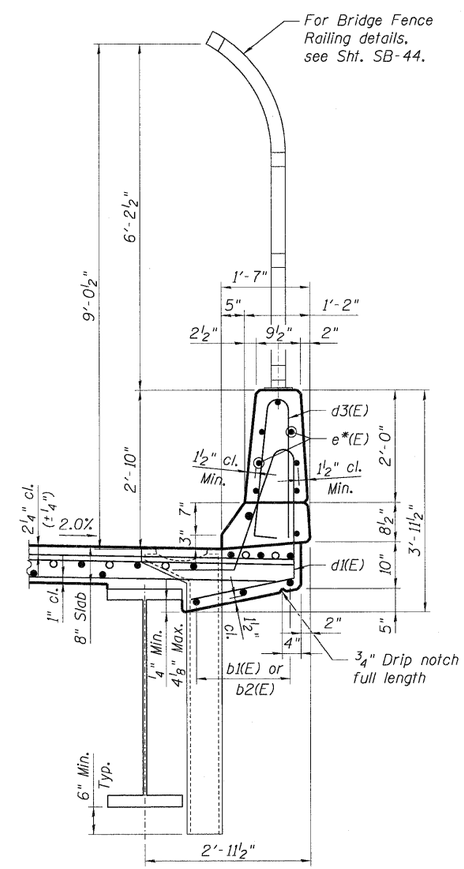

EAST PARAPET SECTION

Looking North

FILE NAME = $FILE1$	USER NAME = $USER$	DESIGNED - JLR	REVISED -	STATE OF ILLINOIS DEPARTMENT OF TRANSPORTATION IL 3 OVER TRRA & ST. CLAIR AVENUE	DECK DETAILS	F.A.P RTE.	SECTION	COUNTY	TOTAL SHEETS / SHEET NO.
		DRAWN - FD	REVISED -			998	82-2-1HVB-1	ST. CLAIR	345 / 210
TENG & ASSOCIATES, INC. ENGINEERS/ARCHITECTS/PLANNERS CHICAGO, ILLINOIS	PLOT SCALE = $SCALE$	CHECKED - JRH	REVISED -				SN 082-0329	CONTRACT NO. 76D05	
	PLOT DATE = $DATE$	DATE - 05/13/11	REVISED -		SCALE:	SHEET NO. SB-18 OF SB-63	STA. 1679+16.65 TO STA.	FED. ROAD DIST. NO.	ILLINOIS FED. AID PROJECT

..\082032-CONN-10-001-SU.DGN,..\082031B-CONN-99-001-BD.DGN,..\082032-CONN-10-001-SU.DGN,..\082032-CONN-10-001-SU.DGN,..\082032-CONN-10-001-SU.DGN,..\082032-CONN-10-001-SU.DGN,..\082032-CONN-10-001-SU.DGN,..\082032-CONN-10-008-SHT-SU.DGN
5-11-2011, 9:56:21 NEWMANND \\FS 0044\VM\VAULT_D-TRANS.07\2202\20866-00\STRUCT\CAD\01 DESIGN\082032\SHEET\082032-CONN-10-008-SHT-SU.DGN