Work Points

Work Point	Station	Offset
A	1681+36.64	18.58 Rt.
B	1681+06.64	18.58 Rt.
C	1681+41.00	55.10 Lt.
D	1681+52.09	60.83 Lt.
E	1681+52.69	59.37 Lt.
F	1681+80.16	74.75 Lt.

*** Cost included with Concrete Superstructure.

DETAIL A

PREFORMED JOINT SEAL

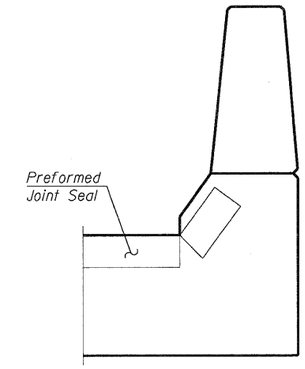

VIEW F-F

Angle Preformed Joint Seal at 45° at curbs when req'd for drainage.

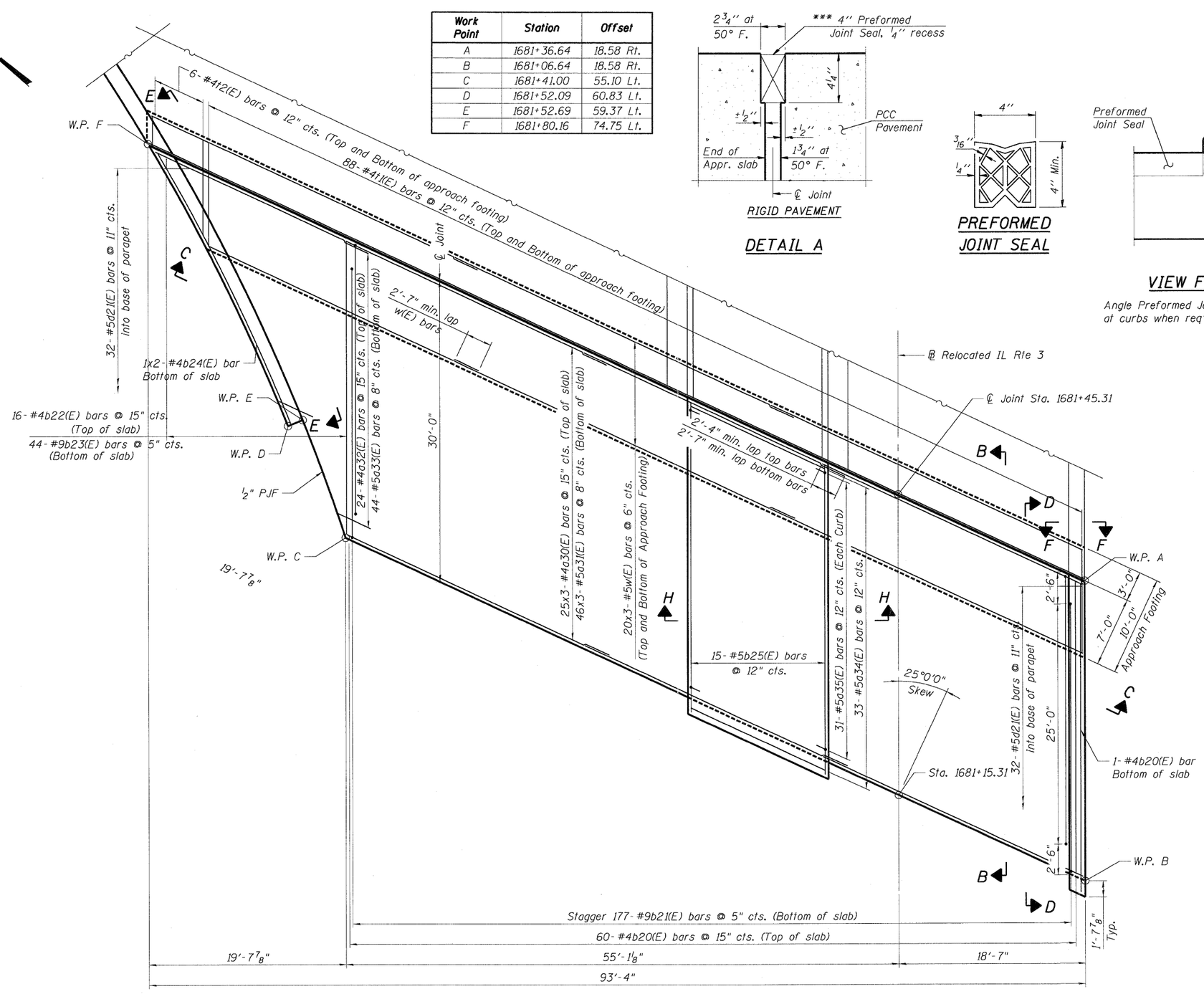

PLAN

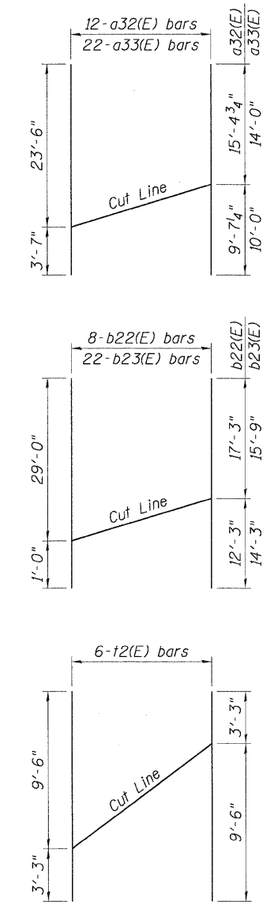

CUTTING DIAGRAMS

NOTES:

1. See sheet SB-21 for Sections B-B & C-C and H-H and Views D-D & E-E.
2. a30(E) thru a33(E) bar spacings measured along ℄ Roadway.
3. Tilt b21(E) bars as required to maintain clearance.
4. Bars indicated thus 25x3-#5 etc. indicated 25 lines of bars with 3 lengths per line.
5. See cutting diagrams for a32(E), a33(E), b22(E), b23(E) and t2(E) bars.

..\0820329-CONN-10-001-AP.DGN..\0820318-CONN-99-001-BD.DGN
5-11-2011, 9:56:27 NEWMANMD \\VS-0044\AMVAULT\D-TRANS.07\2202\20868-001\STRUCT\CADV8\DESIGN\0820329\SHEET\0820329-CONN-10-002-SH1-AP.DGN

FILE NAME = $FILEL$	USER NAME = $USER$	DESIGNED - TCG	REVISED -	STATE OF ILLINOIS DEPARTMENT OF TRANSPORTATION IL 3 OVER TRRA & ST. CLAIR AVENUE	NORTH APPROACH SLAB PLAN
		DRAWN - TCG	REVISED -		
TENG TENG & ASSOCIATES, INC. ENGINEERS/ARCHITECTS/PLANNERS CHICAGO, ILLINOIS	PLOT SCALE = $SCALE$	CHECKED - JLR	REVISED -		
	PLOT DATE = $DATE$	DATE - 05/13/11	REVISED -		SCALE: SHEET NO. SB-20 OF SB-63 STA. 1679+16.65 TO STA.

F.A.P RTE.	SECTION	COUNTY	TOTAL SHEETS	SHEET NO.
998	82-2-1HVB-1	ST. CLAIR	345	212
	SN 082-0329	CONTRACT NO. 76D05		
FED. ROAD DIST. NO.	ILLINOIS	FED. AID PROJECT		