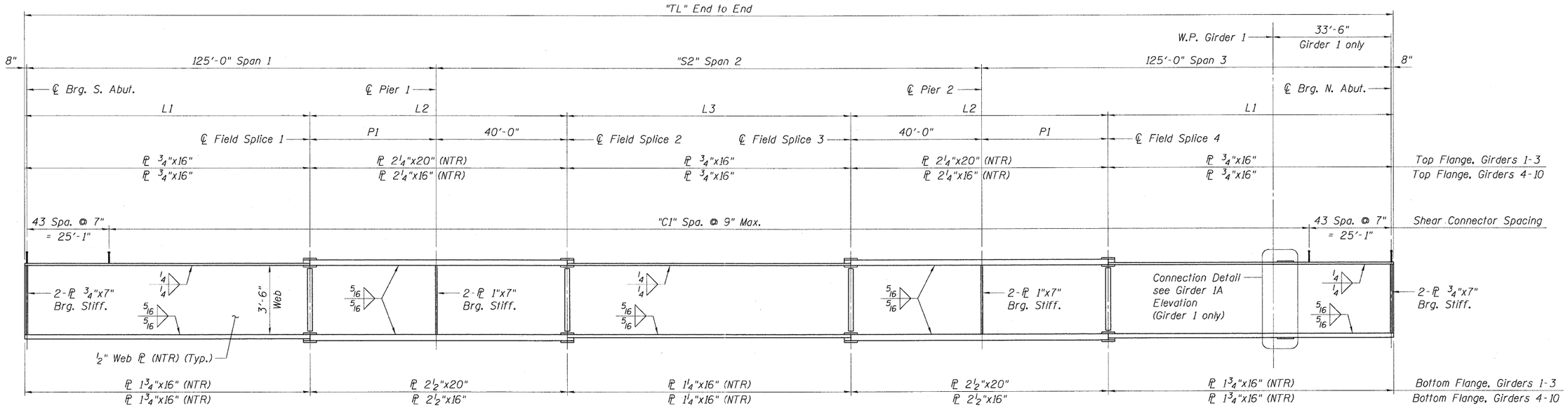

GIRDERS 1-10 ELEVATION

GIRDERS 1-10 DIMENSIONS

Girder	TL	S2	L1	L2	L3	P1	C1
1	413'-5 3/8"	162'-1 3/8"	88'-1"	77'-7"	82'-1 3/8"	37'-7"	483
2	410'-4 1/2"	159'-0 1/2"	88'-9 1/4"	76'-10 3/4"	79'-0 1/2"	36'-10 3/4"	479
3	407'-3 11/16"	155'-11 11/16"	89'-5 9/16"	76'-2 7/16"	75'-11 11/16"	36'-2 7/16"	475
4	404'-2 13/16"	152'-10 13/16"	90'-1 7/8"	75'-6 1/8"	72'-10 13/16"	35'-6 1/8"	471
5	401'-2"	149'-10"	90'-10 3/16"	74'-9 13/16"	69'-10"	34'-9 13/16"	467
6	398'-1 3/16"	146'-9 3/16"	91'-6 1/2"	74'-1 1/2"	66'-9 3/16"	34'-1 1/2"	463
7	395'-0 5/16"	143'-8 5/16"	92'-2 13/16"	73'-5 3/16"	63'-8 5/16"	33'-5 3/16"	459
8	391'-11 1/2"	140'-7 1/2"	92'-11 1/8"	72'-8 7/8"	60'-7 1/2"	32'-8 7/8"	454
9	388'-10 5/8"	137'-6 5/8"	93'-7 3/8"	72'-0 5/8"	57'-6 5/8"	32'-0 5/8"	450
10	385'-9 13/16"	134'-5 13/16"	94'-3 11/16"	71'-4 5/16"	54'-5 13/16"	31'-4 5/16"	446

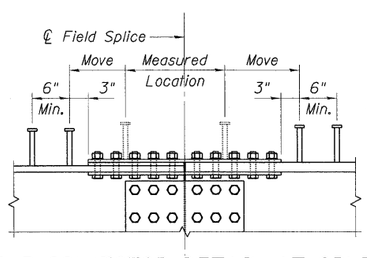

SHEAR CONNECTOR DETAIL AT SPLICES

DO NOT place shear connectors on splice plates.
Move row of studs to 3" beyond nearest edge of splice plate from measured location.

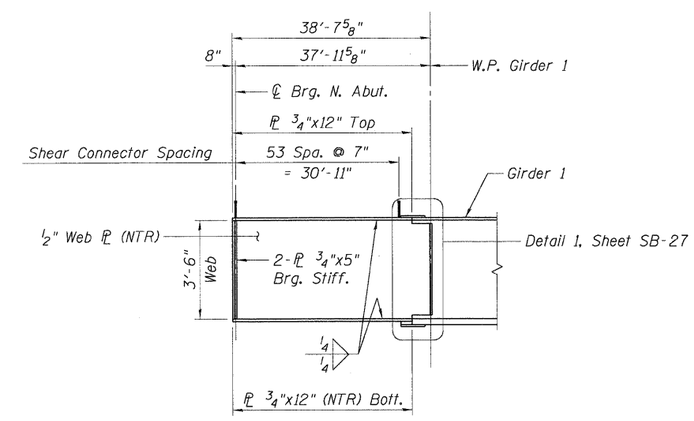

GIRDER 1A ELEVATION

NOTES:

1. *All structural steel shall be AASHTO M 270 Grade 50 except diaphragms, fill plates, and shim plates may be Grade 36.*
2. *Load carrying components designated "NTR" shall conform to the Supplemental Requirements for Notch Toughness, Zone 2.*

FILE NAME = $FILEL$	USER NAME = $USER$	DESIGNED - CCE	REVISED -	STATE OF ILLINOIS DEPARTMENT OF TRANSPORTATION IL 3 OVER TRRA & ST. CLAIR AVENUE	GIRDER ELEVATIONS	F.A.P RTE.	SECTION	COUNTY	TOTAL SHEETS	SHEET NO.
		DRAWN - CCE	REVISED -			998	82-2-1HVB-1	ST. CLAIR	345	216
	PLOT SCALE = $SCALE$	CHECKED - JLR	REVISED -			SN 082-0329		CONTRACT NO. 76D05		
TENG & ASSOCIATES, INC. ENGINEERS/ARCHITECTS/PLANNERS CHICAGO, ILLINOIS	PLOT DATE = $DATE$	DATE - 05/13/11	REVISED -		SCALE: SHEET NO. SB-24 OF SB-63	STA. 1679+16.65 TO STA.	FED. ROAD DIST. NO.	ILLINOIS	FED. AID PROJECT	

..\0820329-CONN-10-001-GE.DGN, ..\0820318-CONN-99-001-BD.DGN, ..\0820329-CONN-10-001-GE.DGN
5-11-2011, 9:56:38 NEWMANMD \\VFS-0244\AMKVAULT_D-TRANS.07\220210688-001\STRUCT\CADD01 DESIGN\0820329\SHEET\0820329-CONN-10-001-SHT-GE.DGN