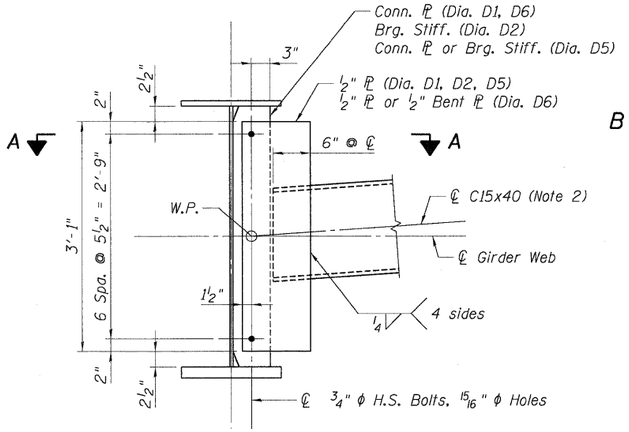


## DIAPHRAGMS D1, D2, D5, AND D6

(119 D1, 9 D2, 10 D5, 1 D6 Required)

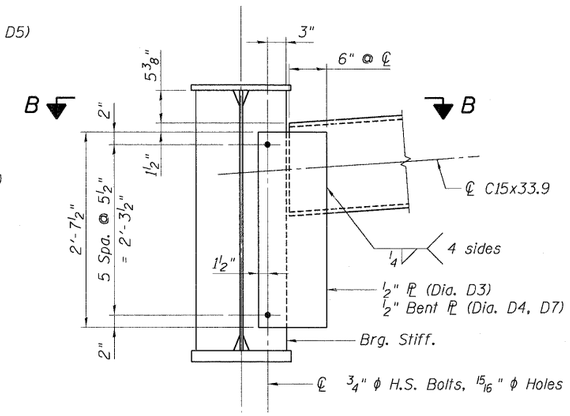


## DIAPHRAGMS D3, D4, AND D7

(9 D3, 9 D4, 1 D7 Required)

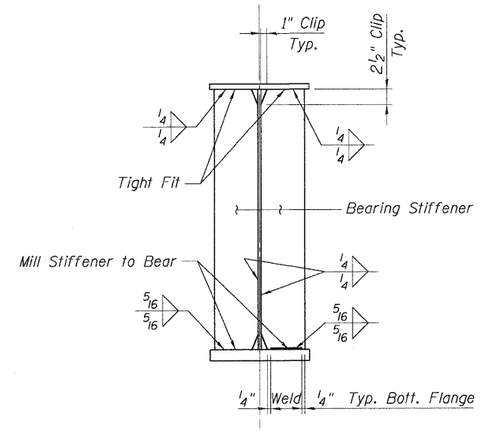


## BEARING STIFFENER DETAIL

At Abutments

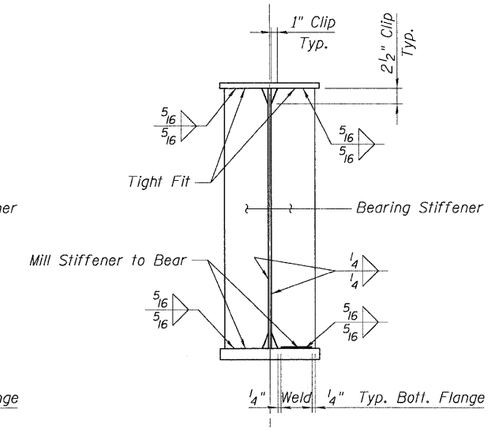


## BEARING STIFFENER DETAIL

At Piers

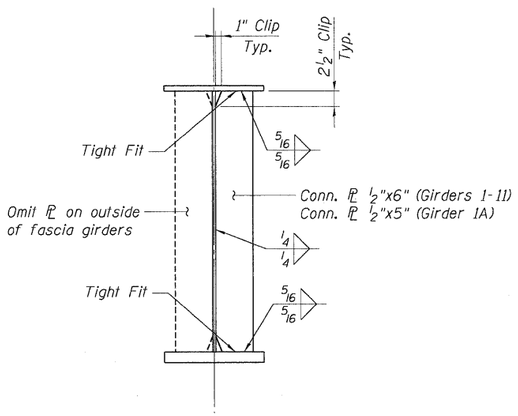


## DIAPHRAGM CONNECTION PLATE DETAIL

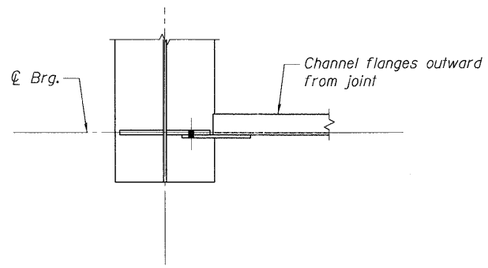


## SECTION B-B (DIA. D3)

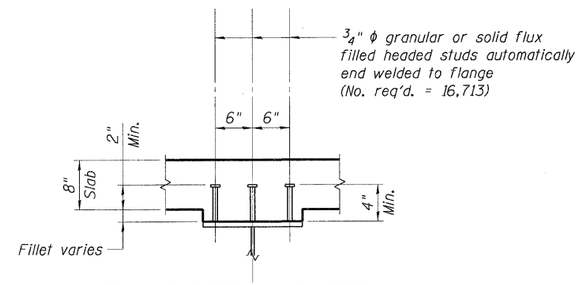


## SHEAR CONNECTOR DETAIL

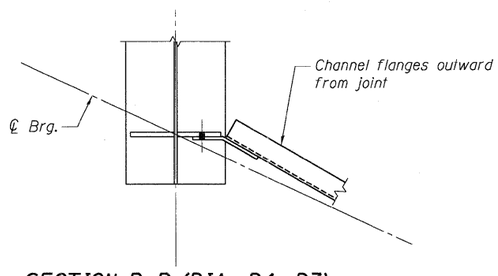


## SECTION B-B (DIA. D4, D7)

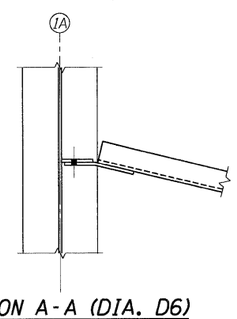


## SECTION A-A (DIA. D6)

**NOTES:**

1. All structural steel shall be AASHTO M 270 Grade 50 except diaphragms, fill plates, and shim plates may be Grade 36.
2. Alternate channels C15x50 are permitted for Diaphragms D1, D2, D5, and D6 to facilitate material acquisition. Calculated weight of structural steel is based on C15x40 sections. The alternate, if utilized, shall be provided at no extra cost to the Department.
3. Two hardened washers required for each set of oversized holes.

..\0820329-CONN-10-001-GE.DGN,..\0820318-CONN-99-001-BD.DGN,..\0820329-CONN-10-001-GE.DGN
5-11-2011, 9:56:49 NEWMANMD \\FS 0244\DM\VAULT_D-TRANS_07\2202\20868-001\STRUCT\CADD\01 DESIGN\0820329\SHEET\0820329-CONN-10-004-SHT-GD.DGN

| | | | | | | | | | | |
|---|---|---|---|---|---|---|---|---|---|---|
| FILE NAME = $FILEL$ | USER NAME = $USER$ | DESIGNED - CCE | REVISED - | STATE OF ILLINOIS DEPARTMENT OF TRANSPORTATION IL 3 OVER TRRA & ST. CLAIR AVENUE | STEEL DETAILS 2 OF 2 | F.A.P RTE. | SECTION | COUNTY | TOTAL SHEETS | SHEET NO. |
| | | DRAWN - CCE | REVISED - | | | 998 | 82-2-1HVB-1 | ST. CLAIR | 345 | 220 |
| TENG TENG & ASSOCIATES, INC. ENGINEERS/ARCHITECTS/PLANNERS CHICAGO, ILLINOIS | PLOT SCALE = $SCALE$ | CHECKED - JLR | REVISED - | | | SN 082-0329 | | CONTRACT NO. 76D05 | | |
| | PLOT DATE = $DATE$ | DATE - 05/13/11 | REVISED - | | SCALE: SHEET NO. SB-28 OF SB-63 STA. 1679+16.65 TO STA. | FED. ROAD DIST. NO. | ILLINOIS | FED. AID PROJECT | | |