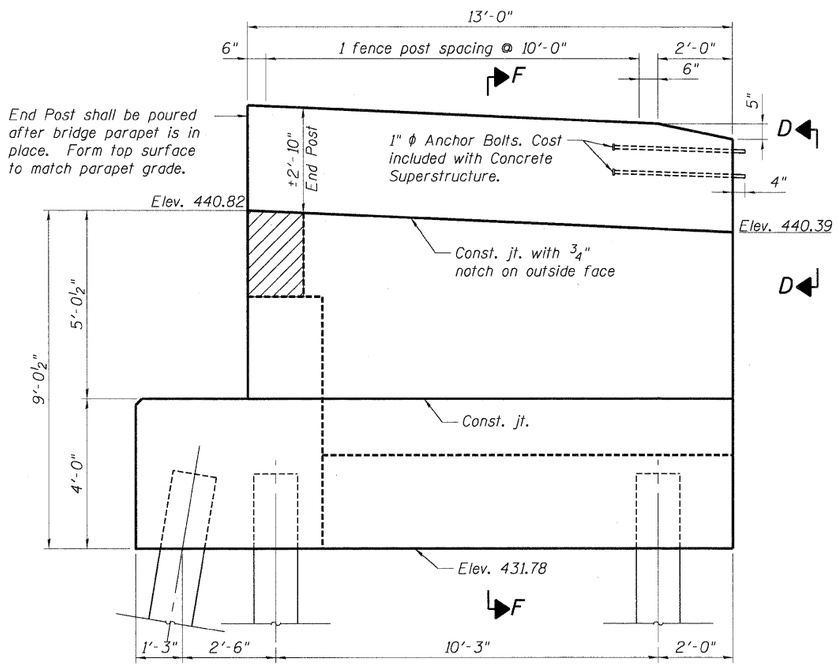

WING WALL ELEVATION
(Looking East - Showing Dimensions)

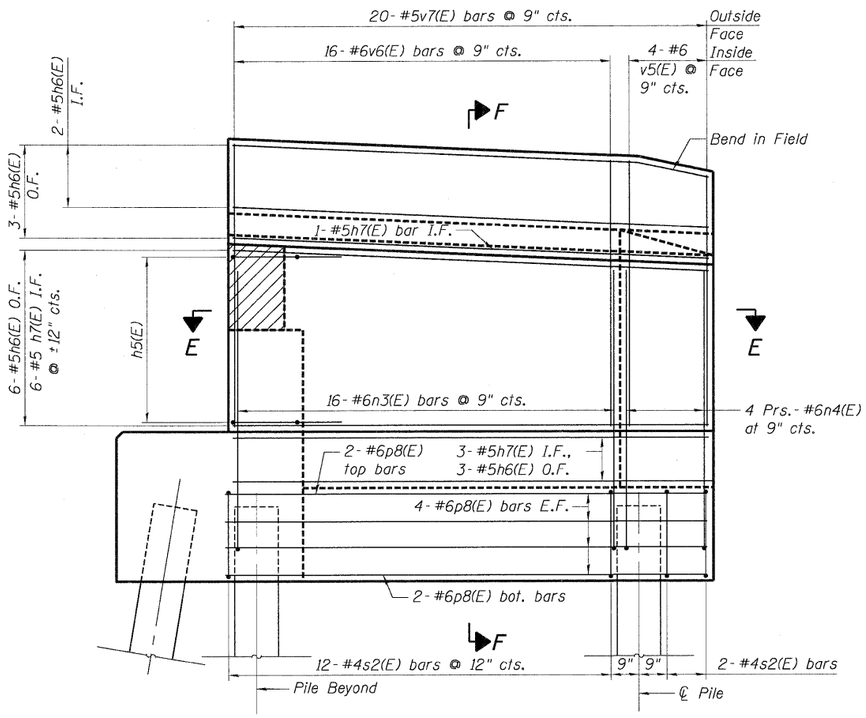

WING WALL ELEVATION
(Looking East - Showing Reinforcement)

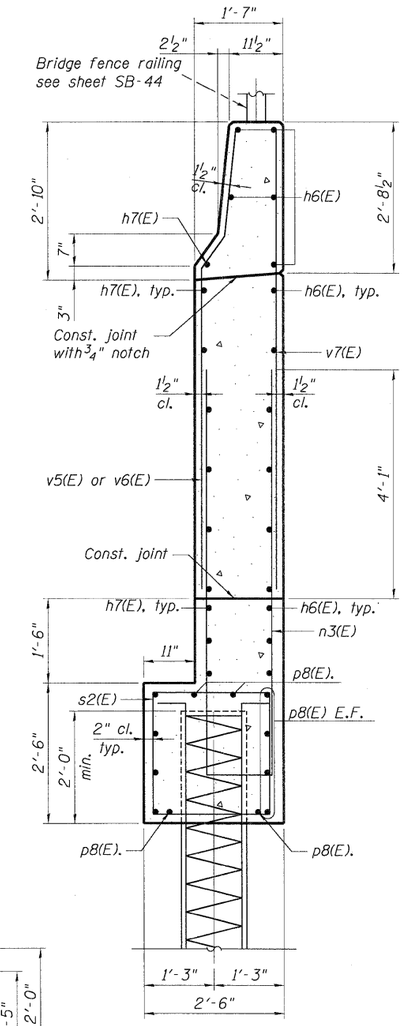

SECTION F-F

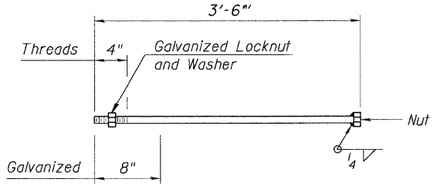

1 " ϕ ANCHOR BOLT

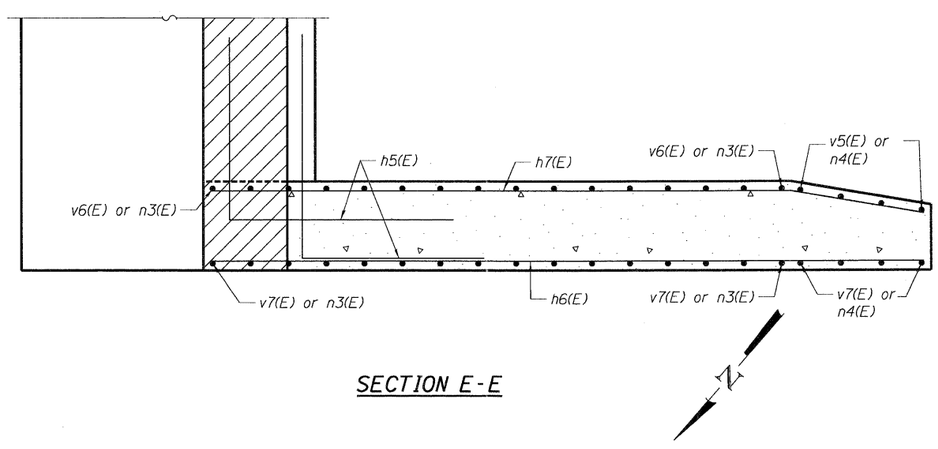

SECTION E-E

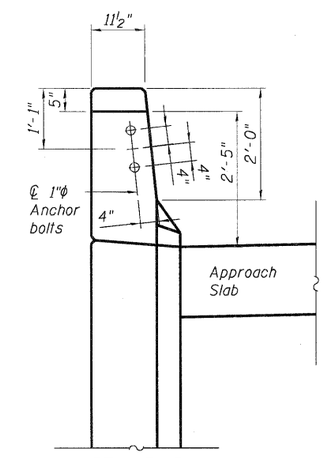

VIEW D-D

FILE NAME = $FILEL$	USER NAME = $USER$	DESIGNED - MDJ	REVISED -	STATE OF ILLINOIS DEPARTMENT OF TRANSPORTATION IL 3 OVER TRRA & ST. CLAIR AVENUE	SOUTH ABUTMENT WEST WINGWALL & DETAILS	F.A.P RTE. 998	SECTION 82-2-1HVB-1	COUNTY ST. CLAIR	TOTAL SHEETS 345 / SHEET NO. 225
TENG TENG & ASSOCIATES, INC. ENGINEERS/ARCHITECTS/PLANNERS CHICAGO, ILLINOIS		DRAWN - MDJ	REVISED -				SN 082-0329	CONTRACT NO. 76D05	
	PLOT SCALE = $SCALE$	CHECKED - JLR	REVISED -						
	PLOT DATE = $DATE$	DATE - 05/13/11	REVISED -		SCALE: SHEET NO. SB-33 OF SB-63 STA. 1679+16.65 TO STA.	FED. ROAD DIST. NO.	ILLINOIS	FED. AID PROJECT	

..\0820329-CONN-10-001-AB.DGN, ..\0820318-CONN-99-001-BD.DGN, ..\0820329-CONN-10-001-AB.DGN, ..\0820329-CONN-10-001-AB.DGN, ..\0820329-CONN-10-001-AB.DGN, ..\0820329-CONN-10-001-AB.DGN, ..\0820329-CONN-10-001-AB.DGN
5-11-2011, 9:57:05 NEWMANMD \\FS-0044\AM\VAULT_D-TRANS_07\2202\20868-001\STRUCT\CAD\01 DESIGN\0820329\SHEET\0820329-CONN-10-004-SHT-AB.DGN