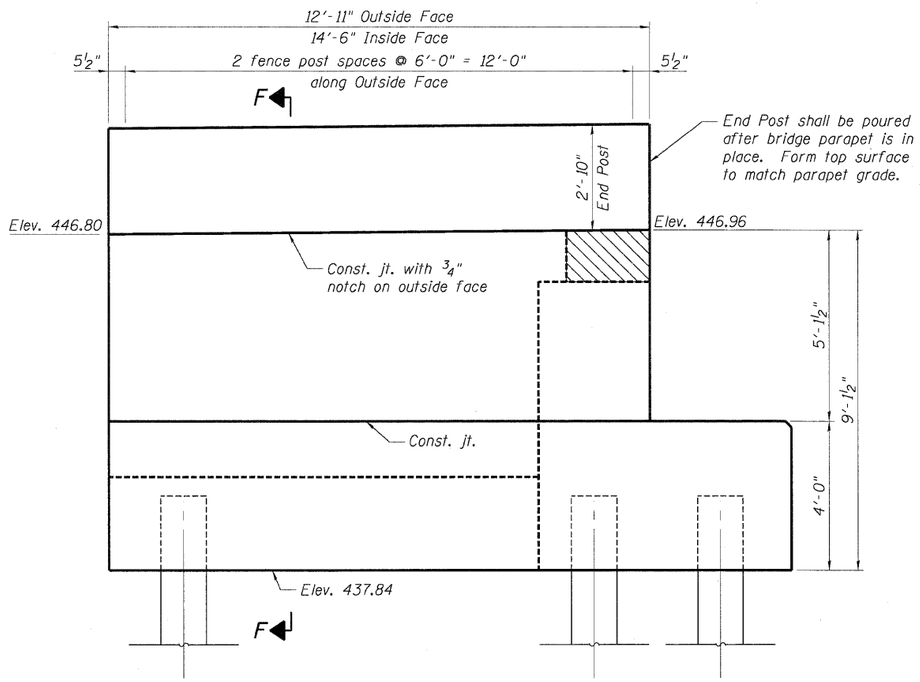

WING WALL ELEVATION
(Looking East - Showing Dimensions)

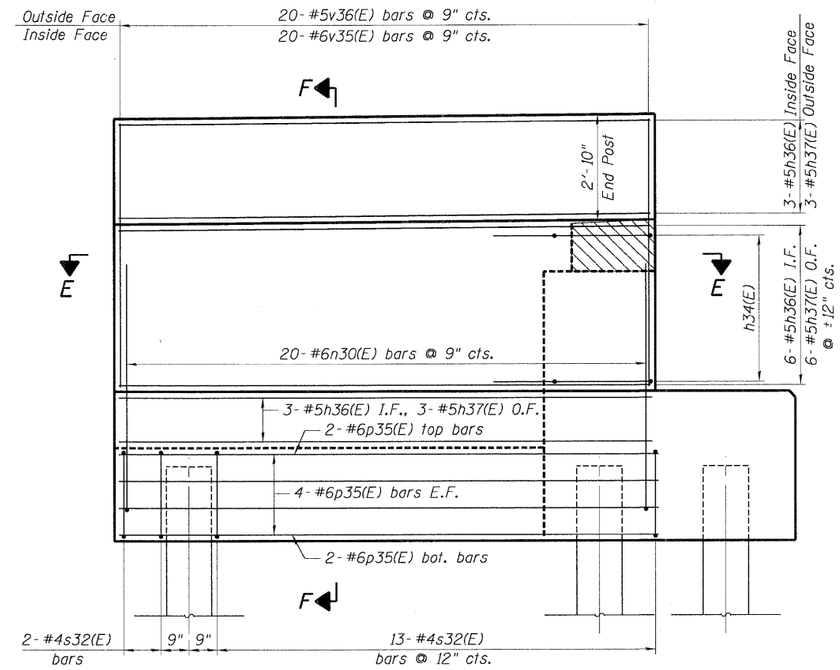

WING WALL ELEVATION
(Looking East - Showing Reinforcement)

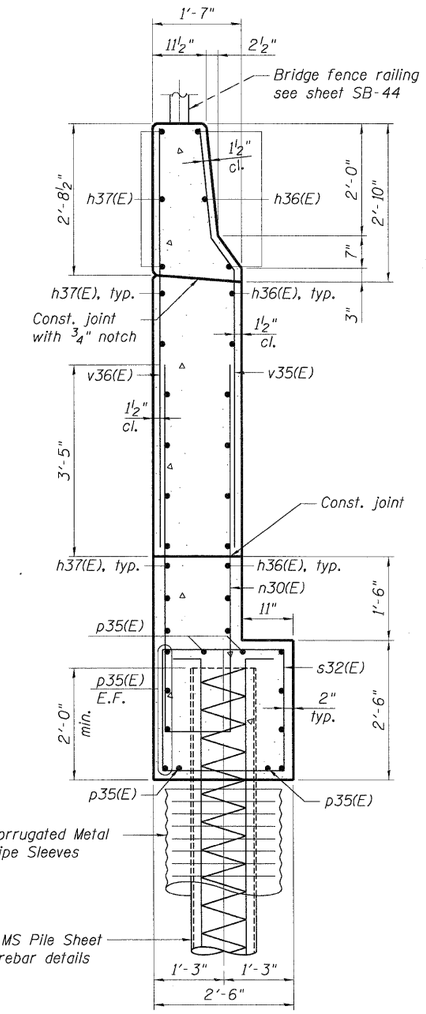

SECTION F-F

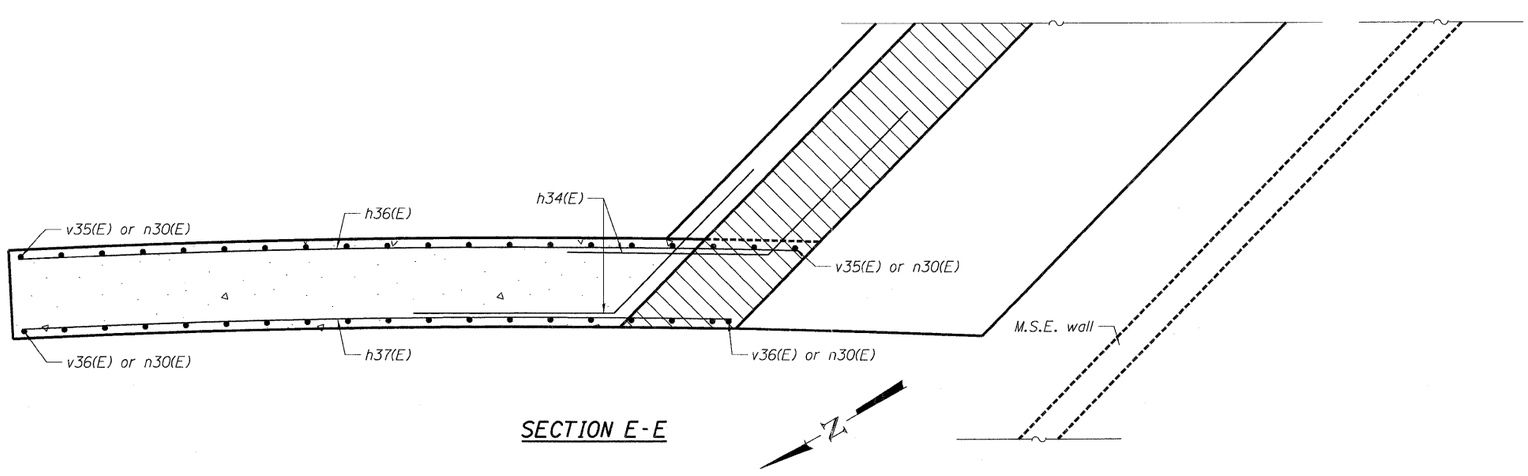

SECTION E-E

NOTES:
1. Space n30(E) bars to miss piles.

FILE NAME = $FILEL$	USER NAME = $USER$	DESIGNED - MDJ	REVISED -	STATE OF ILLINOIS DEPARTMENT OF TRANSPORTATION IL 3 OVER TRRA & ST. CLAIR AVENUE	NORTH ABUTMENT WEST WINGWALL & DETAILS	F.A.P RTE.	SECTION	COUNTY	TOTAL SHEETS	SHEET NO.
		DRAWN - MDJ	REVISED -			998	82-2-1HVB-1	ST. CLAIR	345	233
TENG & ASSOCIATES, INC. ENGINEERS/ARCHITECTS/PLANNERS CHICAGO, ILLINOIS	PLOT SCALE = $SCALE$	CHECKED - JLR	REVISED -			SN 082-0329		CONTRACT NO. 76D05		
	PLOT DATE = $DATE$	DATE - 05/13/11	REVISED -		SCALE: SHEET NO. SB-41 OF SB-63 STA. 1679+16.65 TO STA.	FED. ROAD DIST. NO.	ILLINOIS	FED. AID PROJECT		

..\B820329-CONN-10-002-AB.DGN,..\B822318-CONN-99-001-BD.DGN,..\B820329-CONN-10-002-AB.DGN,..\B820329-CONN-10-002-AB.DGN,..\B820329-CONN-10-002-AB.DGN,..\B820329-CONN-10-002-AB.DGN
5:11:2011,4:57:34 NEWMANMD \\VS0044\IAMVAULT_ID-TRANS 07\22022\20868-001\STRUCTURAL\DESIGN\B820329\SHEET\B820329-CONN-10-007-SH17-AB.DGN