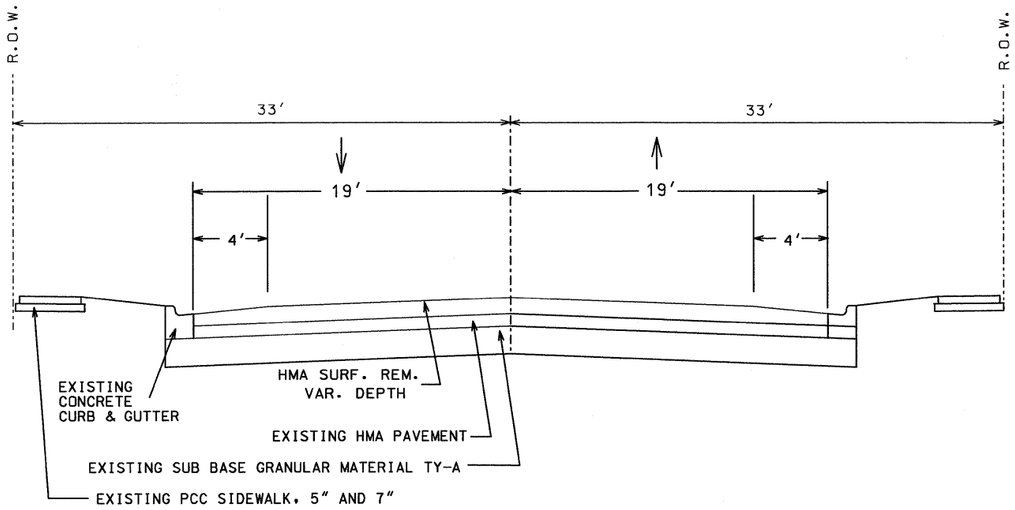

EXISTING
STA 235+31 TO 257+25

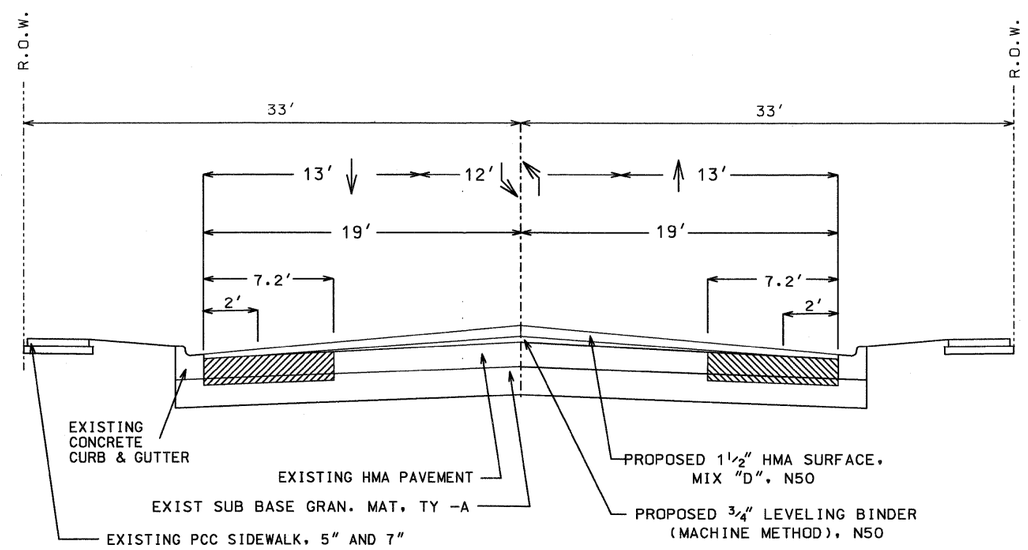

PROPOSED
STA 235+31 TO 256+00

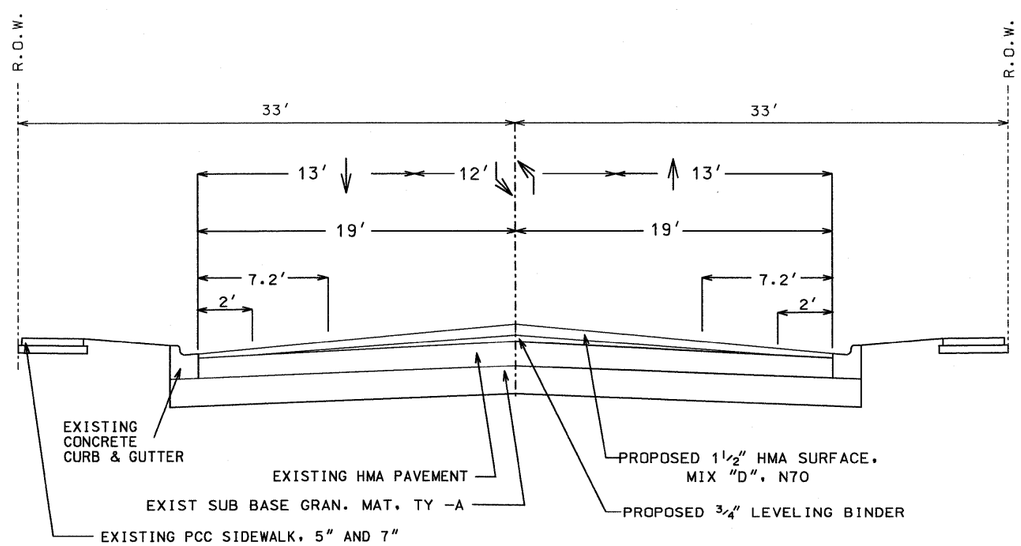

PROPOSED
STA 256+00 TO 257+25

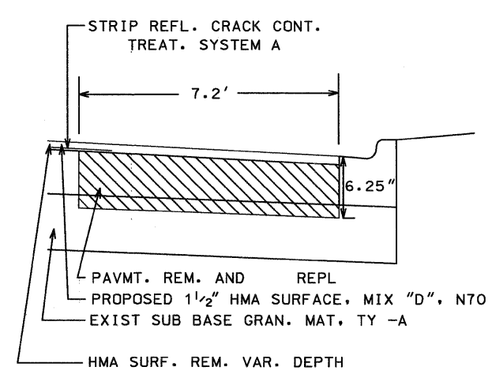

PAVMT. REM. AND REPL
DETAIL
STA 235+31 TO 256+00

FILE NAME = $<FILEL>$	USER NAME = $USER$	DESIGNED - 4-22-11	REVISED - 5-25-11	STATE OF ILLINOIS DEPARTMENT OF TRANSPORTATION	TYPICAL SECTIONS	F.A. RTE.	SECTION	COUNTY	TOTAL SHEETS	SHEET NO.
		DRAWN -	REVISED -			5352	09-00176-01-RS	DEKALB	15	4
	PLOT SCALE = $SCALE$	CHECKED - 4-22-11	REVISED -					CONTRACT NO. 81492		
	PLOT DATE = $DATE$	DATE -	REVISED -		SCALE: SHEET NO. OF SHEETS STA. TO STA.		ILLINOIS FED. AID PROJECT			