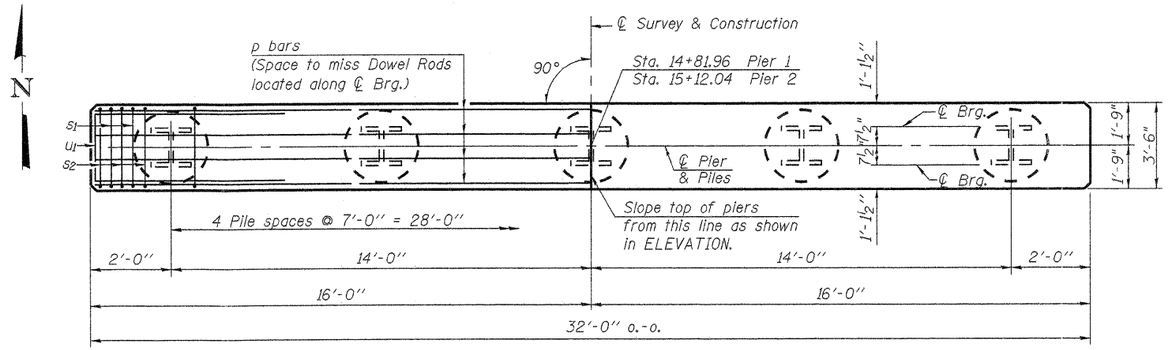

PLAN

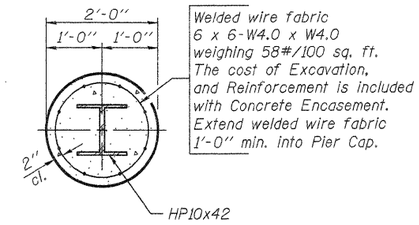

SECTION A-A
PILE ENCASEMENT DETAIL

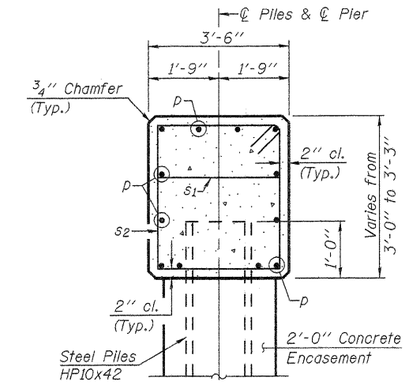

SECTION B-B

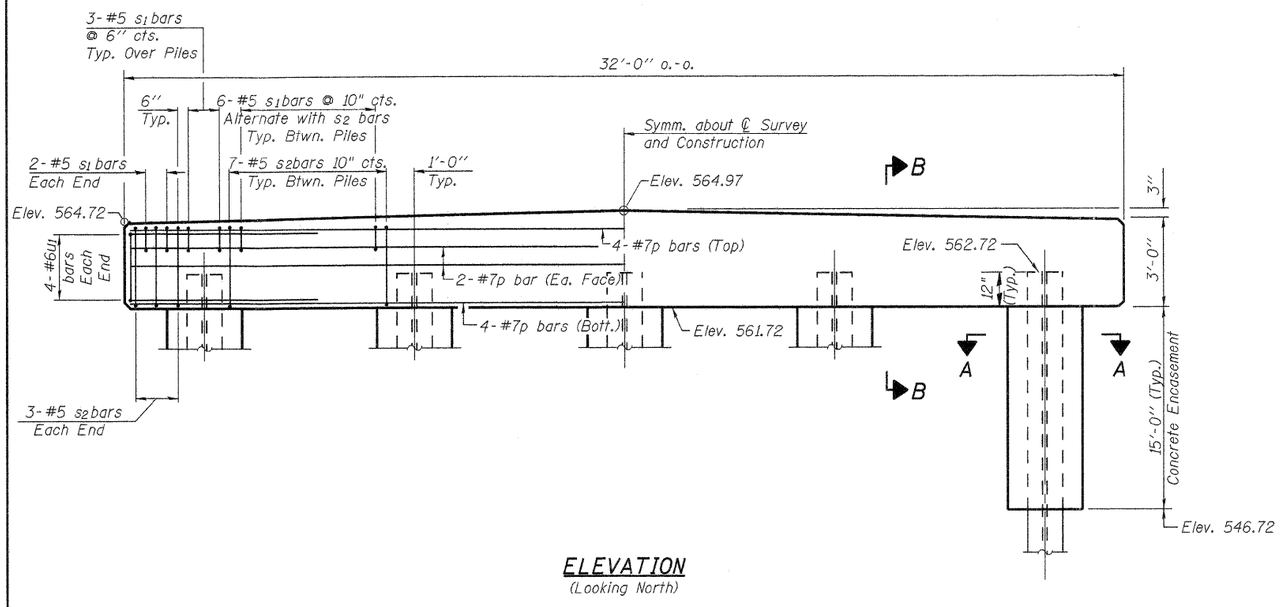

ELEVATION
(Looking North)

PILE DATA

Type & Size.....Steel HP10x42
No. Req'd. (2 Piers).....*10
Nominal Required Bearing.....335 kips
Factored Resistance Available.....180 kips
Estimated Length.....38 ft./pile - Pier 1
28 ft./pile - Pier 2

*Includes 1 Test Pile to be driven to 110% of the nominal required bearing in a permanent location at each pier.

Steel Piles shall be according to AASHTO M270 Grade 50.

BILL OF MATERIAL - 2 PIERS

BAR	NO.	SIZE	LENGTH	SHAPE
p	24	#7	31'-8"	
s_1	86	#5	8'-5"	
s_2	68	#5	12'-7"	
u_1	16	#6	13'-1"	
Concrete Structures			Cu. Yd.	26.3
Reinforcement Bars			Pound	3,520
Furnishing Steel Piles HP10X42			Foot	264
Driving Piles			Foot	264
Test Pile, Steel HP10x42			Each	2
Concrete Encasement			Cu. Yd.	17.5

See Sheet 13 for Pile Details.

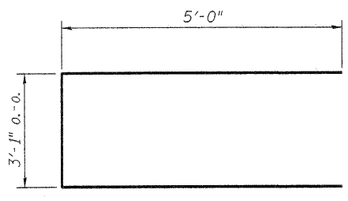

BAR u_1

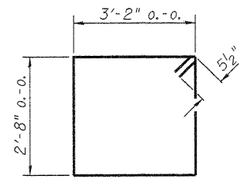

BAR s_2

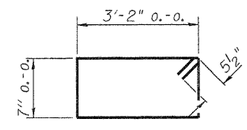

BAR s_1

FILE NAME = PIER-0.DGN	USER NAME = S.A.P.	DESIGNED - A.L.S.	REVISED -
		CHECKED - A.R.K.	REVISED -
	PLOT SCALE = XXX	DRAWN - S.A.P.	REVISED -
	PLOT DATE = 04/19/11	CHECKED - A.L.S. & A.R.K.	REVISED -

FEHR-GRAHAM & ASSOCIATES, LLC
ENGINEERING AND SCIENCE CONSULTANTS
FREEPORT, IL ROCKFORD, IL ROCHELLE, IL MONROE, WI SPRINGFIELD, IL

PIER DETAILS
S.N. 084-3443

C.H.	SECTION	COUNTY	TOTAL SHEETS	SHEET NO.
48	08-00095-00-BR	SANGAMON	18	12
		CONTRACT NO. 93553		
	ILLINOIS	FED. AID PROJECT		

*10-273