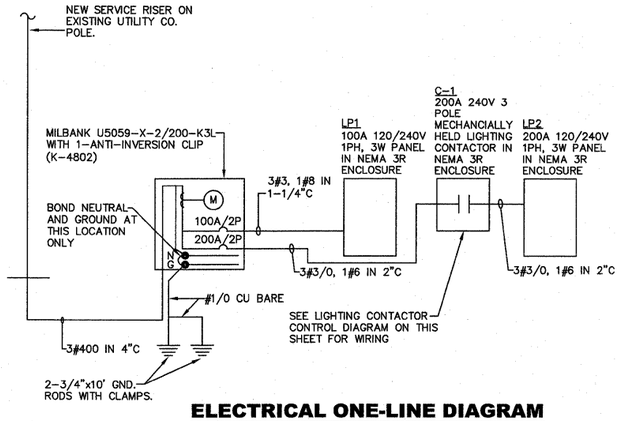

ELECTRICAL ONE-LINE DIAGRAM

NO SCALE

PANEL NO: LP1 (NEMA 3R ENCLOSURE)								22000 AIC
VA	FUNCTION	SIZE	CKT	PH	CKT	SIZE	FUNCTION	VA
360	PLAZA RECPTS	20A/1P	1	A	2	20A/1P	STREET POLE RECPT	1200
360	PLAZA RECPTS	20A/1P	3	B	4	20A/1P	STREET POLE RECPT	1200
1200	STREET POLE RECPT	20A/1P	5	A	6	20A/1P	SPARE	0
1200	STREET POLE RECPT	20A/1P	7	B	8	20A/1P	SPARE	0
1200	STREET POLE RECPT	20A/1P	9	A	10	20A/1P	SPARE	0
0	SPARE	20A/1P	11	B	12	20A/1P	SPARE	0
0	SPARE	20A/1P	13	A	14	20A/1P	SPARE	0
0	SPARE	20A/1P	15	B	16	20A/1P	SPARE	0
0	SPARE	20A/1P	17	A	18	20A/1P	SPARE	0
0	SPARE	20A/1P	19	B	20	20A/1P	SPARE	0
0	SPARE	20A/1P	21	A	22	20A/1P	SPARE	0
0	SPARE	20A/1P	23	B	24	20A/1P	CONTROL POWER	100
	SPACE		25	A	26		SPACE	
	SPACE		27	B	28		SPACE	
	SPACE		29	A	30		SPACE	

PHASE	A	B	TOTALS	VOLTS: 120/240V, 1ø, 3W
VOLTAMPS	9402	8012	17414	
MAINS: 100 AMP MLO		POLES: 30 POSITIONS		MOUNTING: SURFACE

PANEL NO: LP2 (NEMA 3R ENCLOSURE)								22000 AIC
VA	FUNCTION	SIZE	CKT	PH	CKT	SIZE	FUNCTION	VA
443	STREETSCAPE LTG	20A/2P	1	A	2	20A/2P	STREETSCAPE LTG	443
443			3	B	4			443
148	STREETSCAPE LTG	20A/2P	5	A	6	20A/2P	STREETSCAPE LTG	148
148			7	B	8			148
0	SPARE	20A/2P	9	A	10	20A/2P	SPARE	0
0			11	B	12			0
0	SPARE	20A/2P	13	A	14	20A/2P	SPARE	0
0			15	B	16			0
0	SPARE	20A/2P	17	A	18	20A/2P	SPARE	0
0			19	B	20			0
1080	CHRISTMAS RECPT	20A/1P	21	A	22	20A/1P	CHRISTMAS RECPT	1080
720	CHRISTMAS RECPT	20A/1P	23	B	24	20A/1P	CHRISTMAS RECPT	720
1200	PLAZA LIGHTING	20A/1P	25	A	26	20A/1P	SPARE	0
0	SPARE	20A/1P	27	B	28	20A/1P	SPARE	0
0	SPARE	20A/1P	29	A	30	20A/1P	SPARE	0
0	SPARE	20A/1P	31	B	32	20A/1P	SPARE	0
	SPACE		33	A	34		SPACE	
	SPACE		35	B	36		SPACE	
	SPACE		37	A	38		SPACE	
	SPACE		39	B	40		SPACE	
	SPACE		41	A	42		SPACE	

PHASE	A	B	TOTALS	VOLTS: 120/240V, 1ø, 3W
VOLTAMPS	9402	8012	17414	
MAINS: 200 AMP MLO		POLES: 42 POSITIONS		MOUNTING: SURFACE

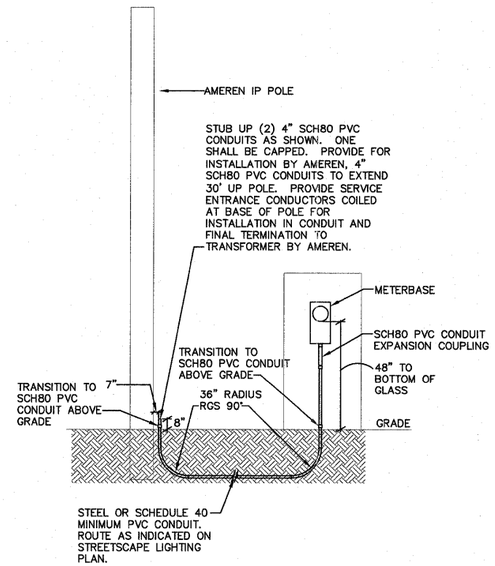

ELECTRICAL SERVICE SPECIAL

NO SCALE

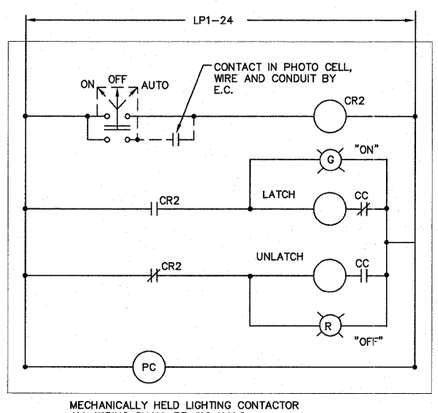

MECHANICALLY HELD LIGHTING CONTACTOR
ALL WIRING SHALL BE #12 U.N.O.

CONTACTOR CONTROL DIAGRAM

NO SCALE

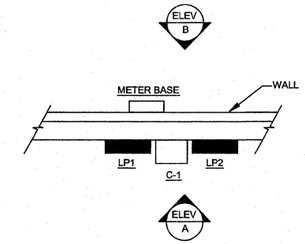

EQUIPMENT LAYOUT PLAN

NO SCALE

NOTE:
ALL METAL PRODUCTS SHALL BE MANUFACTURED OR PRODUCED AND FABRICATED IN THE UNITED STATES OF AMERICA. THE APPLICATION OF ALL COATINGS, EPOXY, GALVANIZING, PAINTING, ETC., TO METAL PRODUCTS SHALL BE APPLIED IN THE UNITED STATES OF AMERICA.

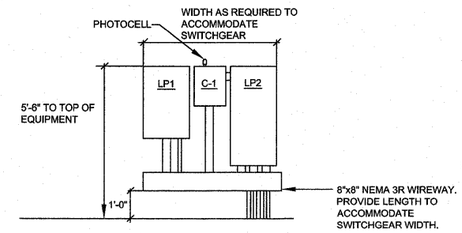

ELEVATION A

NO SCALE

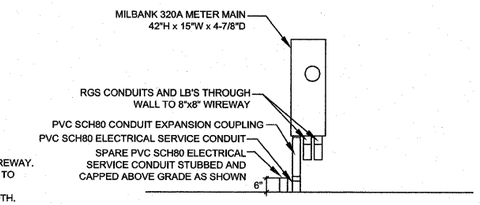

ELEVATION B

NO SCALE

PANEL AND CONTROLS DETAIL

NO SCALE

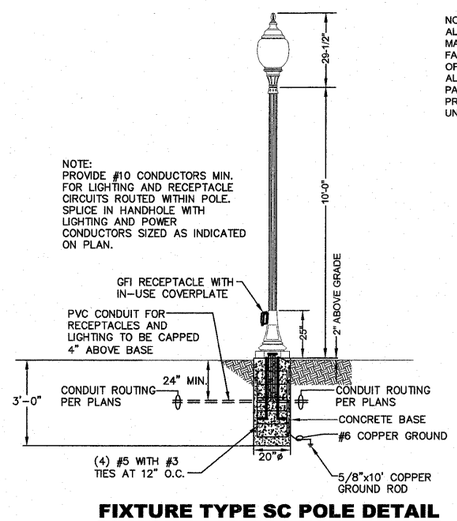

FIXTURE TYPE SC POLE DETAIL

NOT TO SCALE PAY CODES: DEC POLES – 10 FT AND LIGHT POLE FDN SPL(EA)

NOTE:
ALL METAL PRODUCTS SHALL BE MANUFACTURED OR PRODUCED AND FABRICATED IN THE UNITED STATES OF AMERICA. THE APPLICATION OF ALL COATINGS, EPOXY, GALVANIZING, PAINTING, ETC., TO METAL PRODUCTS SHALL BE APPLIED IN THE UNITED STATES OF AMERICA.

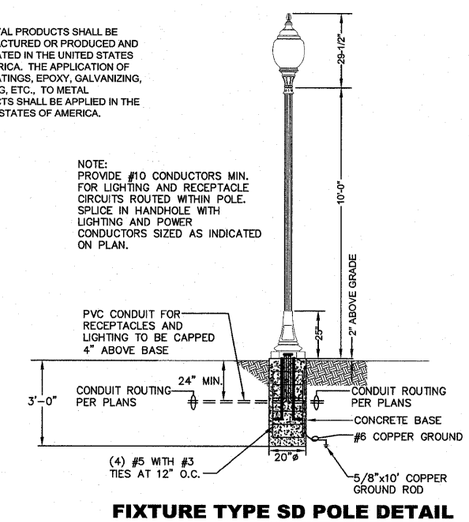

FIXTURE TYPE SD POLE DETAIL

NOT TO SCALE PAY CODES: LT POLE SPL DEC ORN AND LIGHT POLE FDN SPL(EA)

FILE NAME = M:\624-25\CAD\ELECTRICAL\E SHEETS.DWG	USER NAME = JEFF NOLTE	DESIGNED - JEN	REVISED -	STATE OF ILLINOIS DEPARTMENT OF TRANSPORTATION	ELECTRICAL SCHEDULES AND DETAILS	F.A.U. RTE.	SECTION	COUNTY	TOTAL SHEETS	SHEET NO.
		DRAWN - JEN	REVISED -			9302	06-00045-00-SW	MONROE	24	19
	PLOT SCALE = 4 41/64" = 1'	CHECKED - BEC	REVISED -					CONTRACT NO. 97468		
	PLOT DATE = 2011-06-17	DATE - 2011-05-13	REVISED -		SCALE: AS NOTED / SHEET NO. 2 OF 3 SHEETS / STA. ____ TO STA. ____	COLUMBIA	ILLINOIS	FEDERAL AID PROJECT		