STATE OF ILLINOIS
DEPARTMENT OF TRANSPORTATION

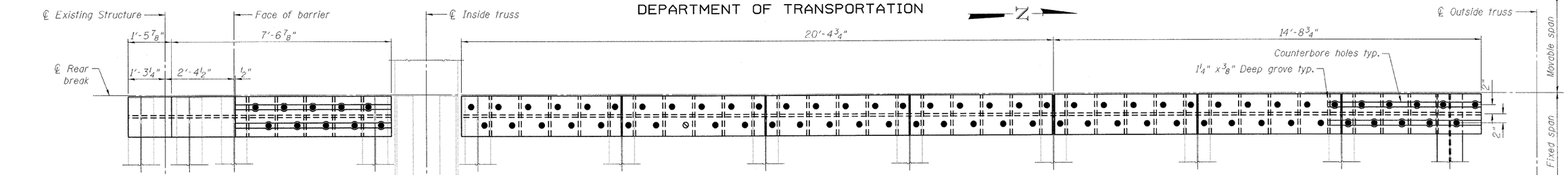

PLAN REAR BREAK IN ROADWAY

(Northwest break as shown and noted, Northeast opposite as shown and noted)

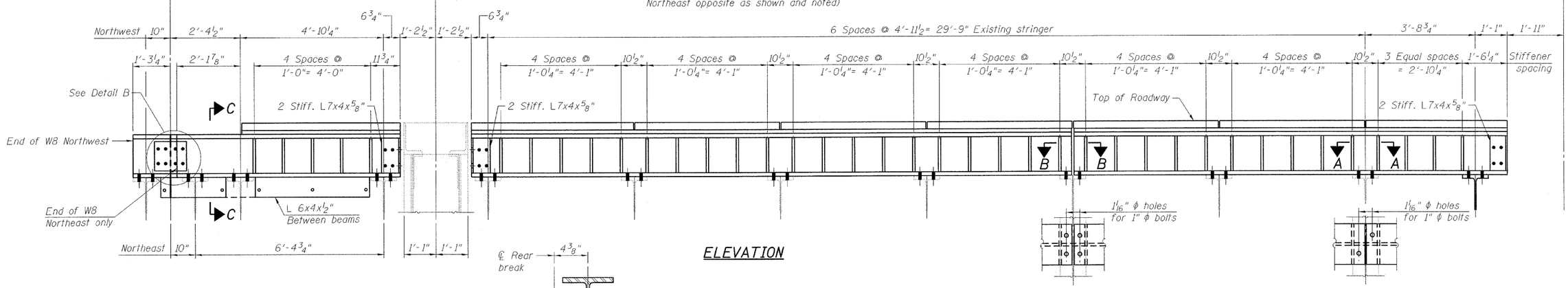

ELEVATION

SECTION B-B

SECTION A-A

SECTION C-C

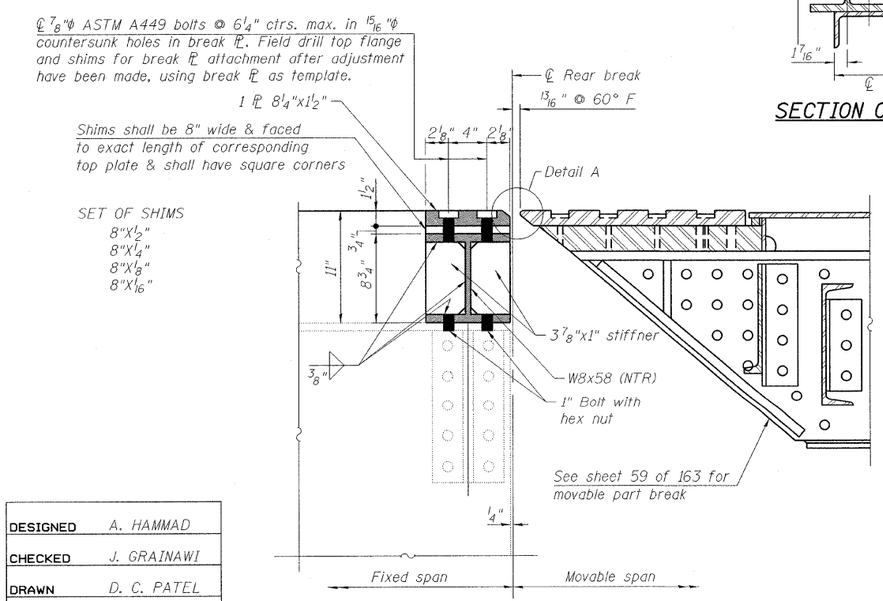

TYPICAL SECTION THRU REAR BREAK

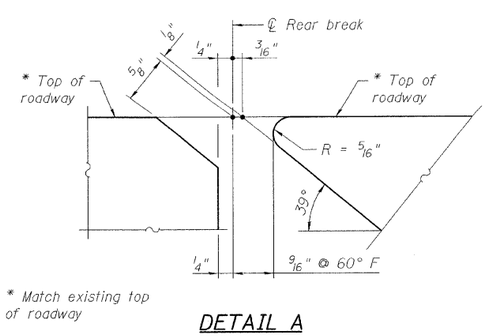

DETAIL A

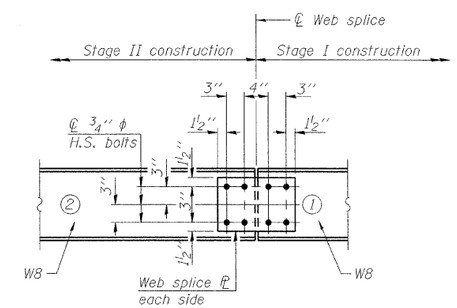

DETAIL B

(Northwest only as per sequence below)

Note:
Rear break assembly shall be paid for under the item "Furnishing and Erecting Structural Steel."

LEGEND

- Existing fastener to remain
- Hole to match existing location
- New hole
- Existing member to remain
- New member

REAR BREAK STAGE CONSTRUCTION SEQUENCE

1.) Remove existing section ② and replace with new W8 and attached to section ① in Stage II.

REAR BREAK (WB)
STRUCTURE NO. 016-2445

DESIGNED	A. HAMMAD
CHECKED	J. GRAINAWI
DRAWN	D. C. PATEL
CHECKED	A. HAMMAD

PB Americas, Inc.
230 WEST MONROE STREET,
SUITE 900
CHICAGO, IL. 60606

SHEET NO. 31
163 SHEETS

F.A.P RTE.	SECTION	COUNTY	TOTAL SHEETS	SHEET NO.
389	2424.2B-R	COOK	398	112
		CONTRACT NO. 60D61		
FED. ROAD DIST. NO. 7	ILLINOIS	FED. AID PROJECT		

T:\16843A\Structural\Cadd\Pre-final\EB_Plans\0162445-60D61-031-RBS.dgn
05-JUN-2009 10:01

6-05-09