STATE OF ILLINOIS
DEPARTMENT OF TRANSPORTATION

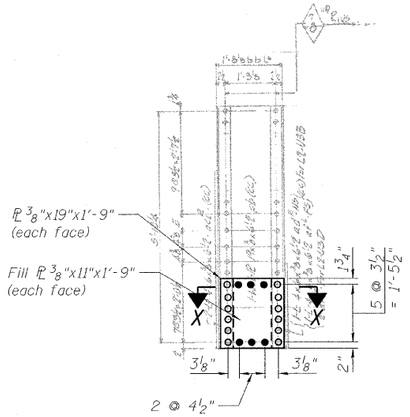

SECTION E-E
POST L2-U3

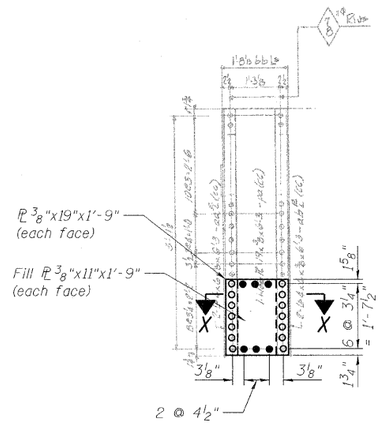

SECTION F-F
POST L4-U5

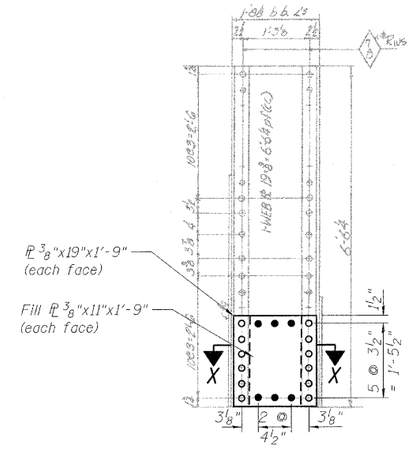

SECTION G-G
POST L6-U7

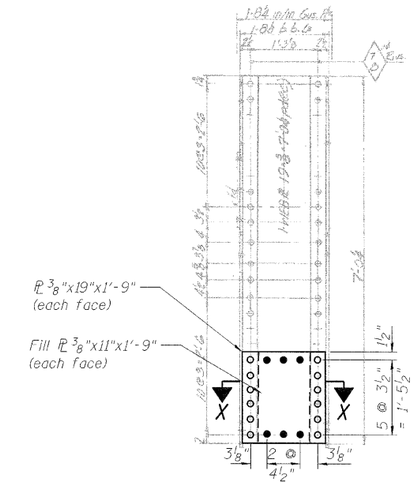

SECTION H-H
POST L8-U9

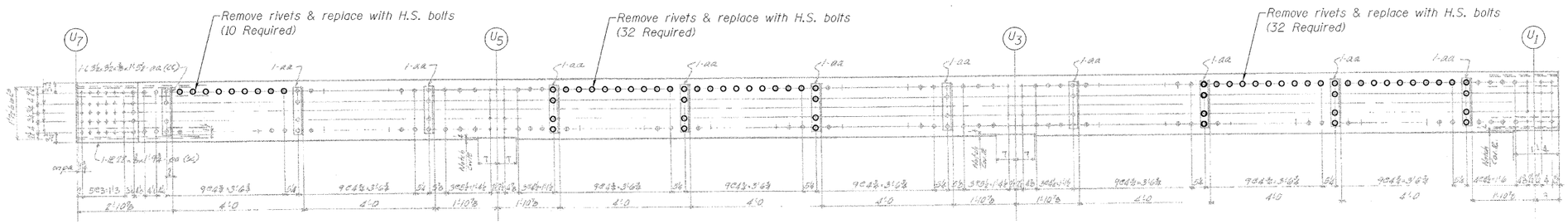

SECTION A-A

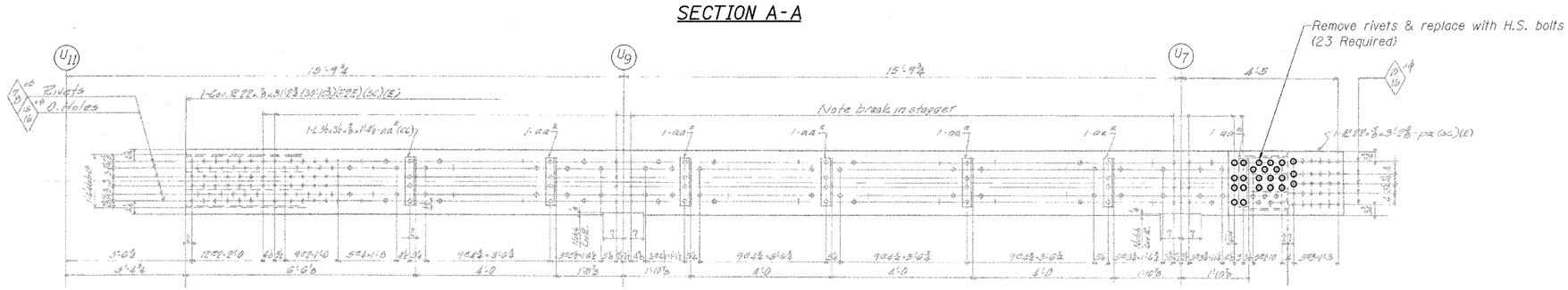

SECTION B-B

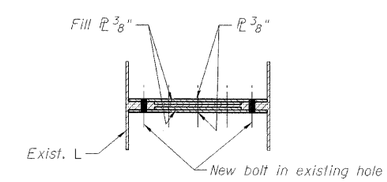

SECTION X-X

DESIGNED	P. PETERSON
CHECKED	J. GRAINAWI
DRAWN	D. C. PATEL
CHECKED	A. HAMMAD

LEGEND

R&R	Remove & replace
○	Existing fastener to remain
○	Hole to match existing location
●	New hole
.....	Existing member to remain
——	New member

Note:
Portions of this drawing are extracted from original drawings for this bridge. Details shown are provided to illustrate the work be performed.

PB Americas, Inc.
230 WEST MONROE STREET,
SUITE 900
CHICAGO, IL. 60606

SHEET NO. 104
163 SHEETS

F.A.P RTE.	SECTION	COUNTY	TOTAL SHEETS	SHEET NO.
389	2424.2B-R	COOK	398	185
		CONTRACT NO. 60D61		
FED. ROAD DIST. NO. 7	ILLINOIS	FED. AID PROJECT		

TRUSS REPAIRS
OUTSIDE TRUSS (SOUTHEAST)
STRUCTURE NO. 016-2445

T:\16843A\Structural\Cadd\Pre-final\EB_Plans\0162445-60D61-TRR-102.dgn
07-MAY-2009