STATE OF ILLINOIS
DEPARTMENT OF TRANSPORTATION

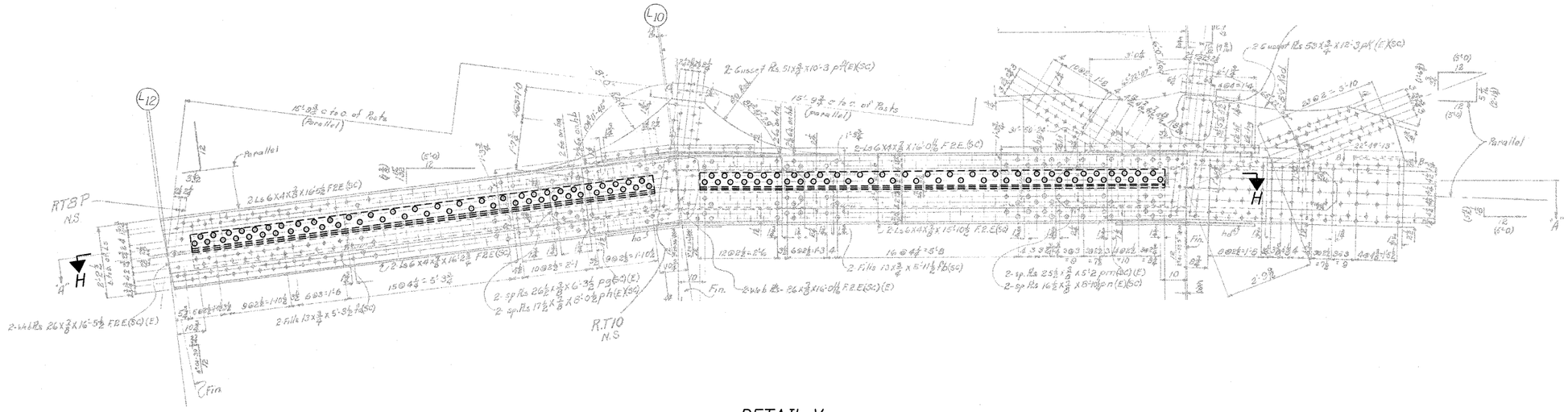

DETAIL V

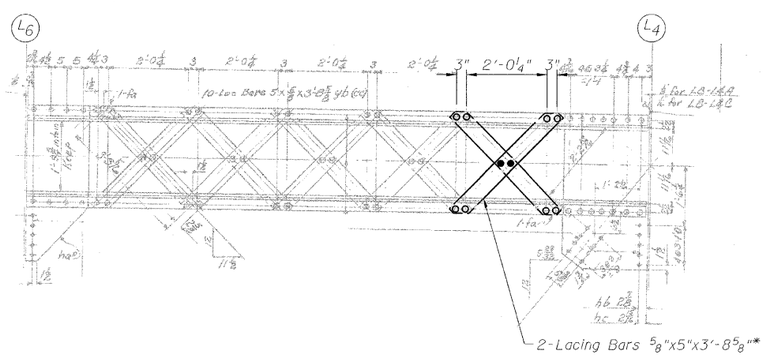

SECTION G-G

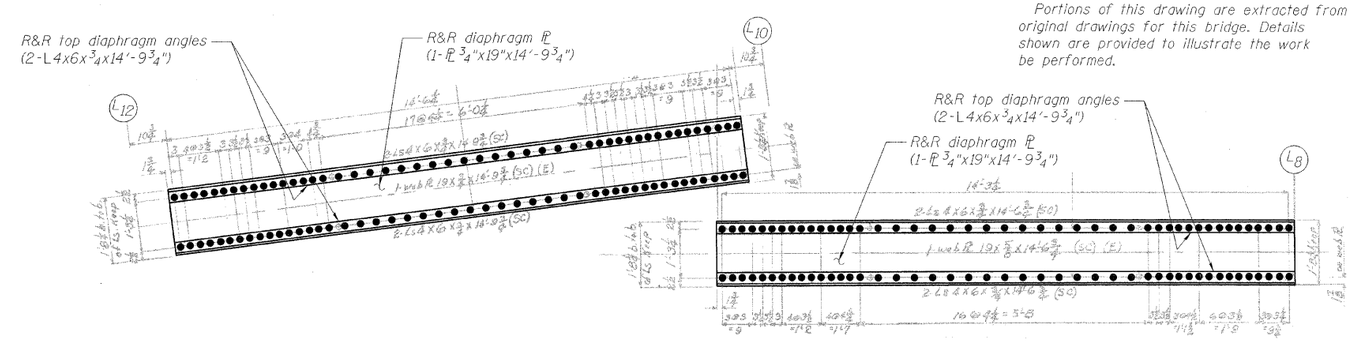

SECTION H-H

LEGEND

R&R	Remove & replace
○	Existing fastener to remain
○	Hole to match existing location
●	New hole
·····	Existing member to remain
——	New member

Note:
Portions of this drawing are extracted from original drawings for this bridge. Details shown are provided to illustrate the work be performed.

DESIGNED	P. PETERSON
CHECKED	J. GRAINAWI
DRAWN	D. C. PATEL
CHECKED	A. HAMMAD

* Measured Center-Center of holes. Proposed bar length and shape to match existing bars.

PB Americas, Inc.
230 WEST MONROE STREET,
SUITE 900
CHICAGO, IL. 60606

SHEET NO. 116
163 SHEETS

TRUSS REPAIRS
INSIDE TRUSS (NORTHWEST)
STRUCTURE NO. 016-2445

F.A.P RTE.	SECTION	COUNTY	TOTAL SHEETS	SHEET NO.
389	2424.2B-R	COOK	398	197
		CONTRACT NO. 60D61		
FED. ROAD DIST. NO. 7	ILLINOIS	FED. AID PROJECT		

T:\16843A\Structural\Cadd\Pre-final\EB_Plans\0162445-60D61-TRR-114.dgn
07-MAY-2009