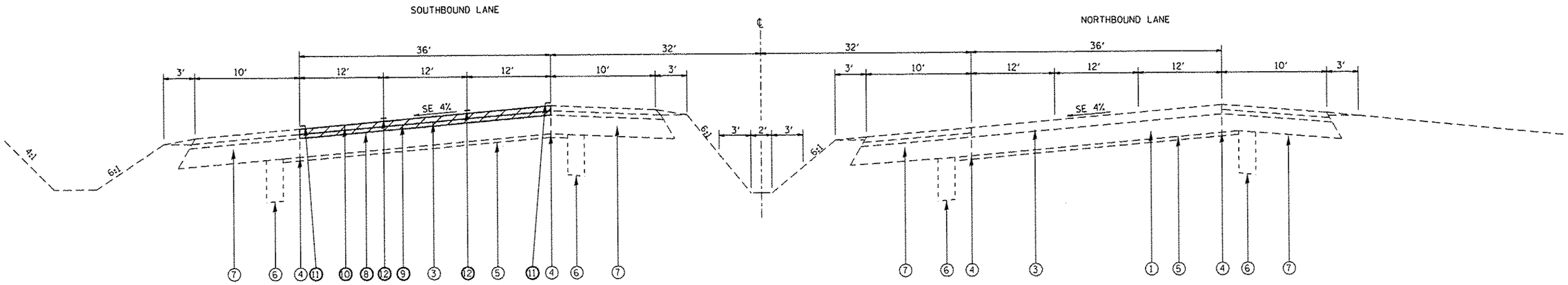

BROADWELL

STA. 865+12.63 TO STA. 870+12.63

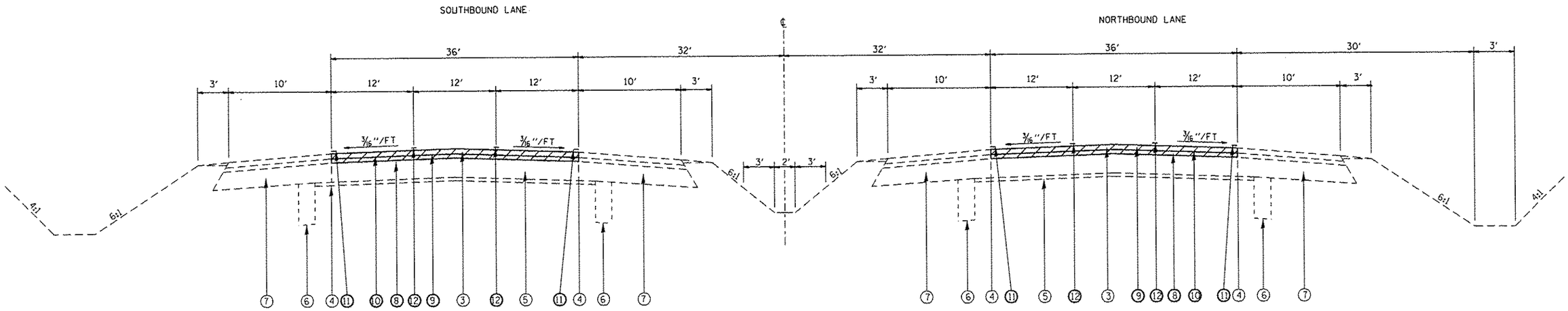

LINCOLN

STA. 171+25.51 TO STA. 176+25.51
BL-55 (SB & NB)

NOTES

1. MILL TO BARE CONCRETE.
2. MATCH EXISTING SUPERELEVATION

LEGEND

1. EXISTING CRCP PAVEMENT 9"
2. EXISTING HOT-MIX ASPHALT 3¼"
3. EXISTING HOT-MIX ASPHALT 3"
4. EXISTING LONGITUDINAL JOINT
5. EXISTING STABILIZED SUBBASE 4"
6. EXISTING UNDERDRAIN
7. EXISTING HOT-MIX ASPHALT SHOULDER
8. PROPOSED POLYMERIZED HOT-MIX ASPHALT LEVELING BINDER COURSE, IL-9.5, N90, 1 1/2"
9. PROPOSED POLYMERIZED HOT-MIX ASPHALT SURFACE COURSE, MIX "D", N90, 1½"
10. PROPOSED HOT-MIX ASPHALT SURFACE REMOVAL, (VARIABLE DEPTH)
11. PROPOSED MODIFIED URETHANE PAVEMENT MARKING - LINE, 5"
12. PROPOSED PREFORMED PLASTIC PAVEMENT MARKING TYPE B - INLAID - LINE, 5"

* D6 SPRING RD REPAIR 2014-2
** LOGAN/SANGAMON COUNTIES

FILE NAME = c:\pw_work\pwidot\sparksgw\d0387600\D672H02-sht-typical.dgn	USER NAME = sparksgw	DESIGNED -	REVISED -	STATE OF ILLINOIS DEPARTMENT OF TRANSPORTATION	I-55 TYPICAL SECTIONS D6 SPRING RD REPAIR 2014-2	F.A.I. RTE.	SECTION	COUNTY	TOTAL SHEETS	SHEET NO.
	PLOT SCALE = 100.0000 ' / in.	DRAWN -	REVISED -			55	*	**	10	7
Default	PLOT DATE = Apr-17-2014 02:19:24PM	CHECKED -	REVISED -			CONTRACT NO. 72H02				
		DATE -	REVISED -		SCALE: SHEET OF SHEETS STA. TO STA.	ILLINOIS FED. AID PROJECT				