STATE OF ILLINOIS
DEPARTMENT OF TRANSPORTATION

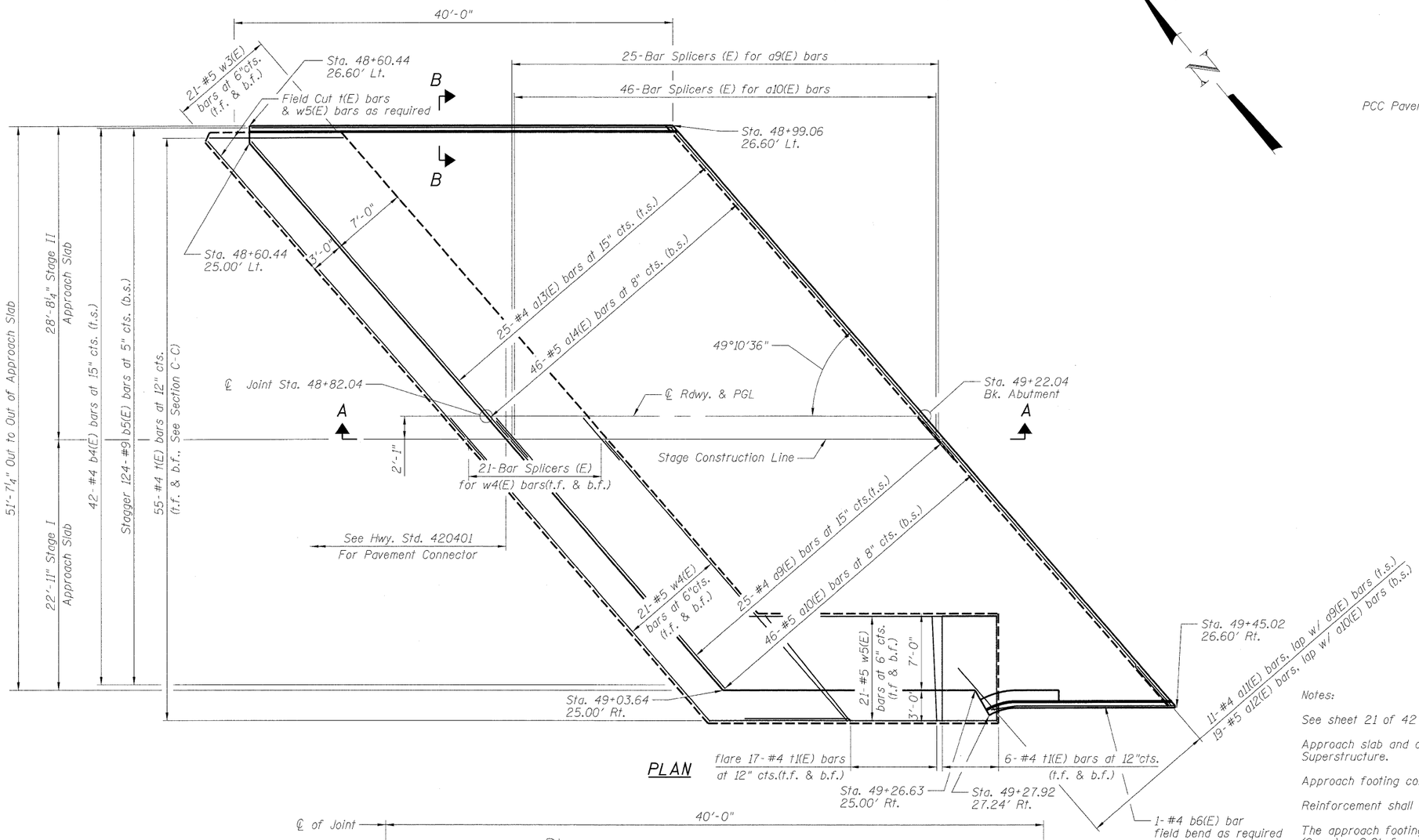

PLAN

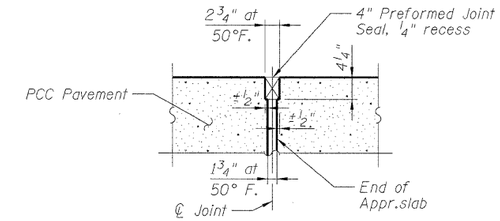

DETAIL 'A'

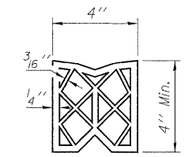

PREFORMED JOINT SEAL

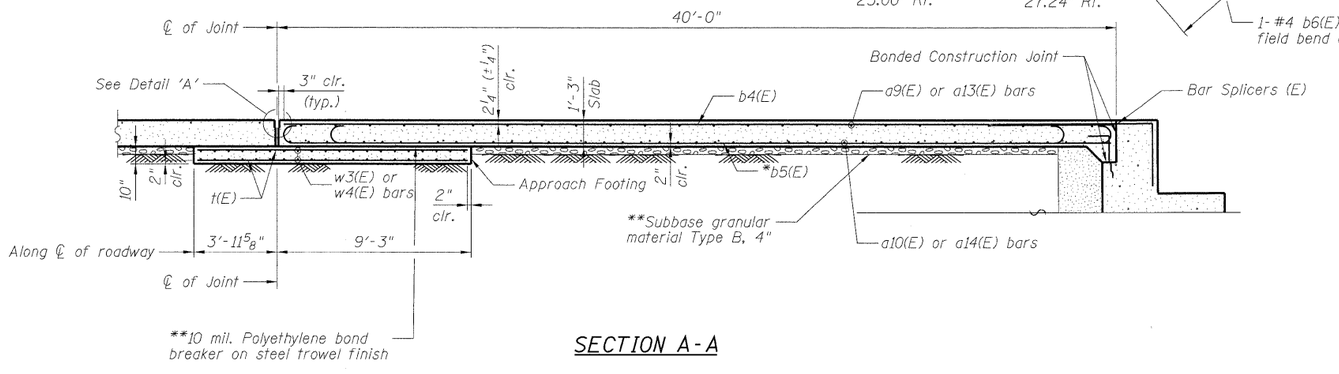

SECTION A-A

Notes:

See sheet 21 of 42 for end section, Bar detailing and bill of materials.

Approach slab and curb concrete shall be paid for as Concrete Superstructure.

Approach footing concrete shall be paid for as Concrete Structures.

Reinforcement shall be paid for as Reinforcement Bars, Epoxy Coated.

The approach footing maximum applied service bearing pressure (Qmax) = 2.0ksf.

For details of Bar Splicers, see sheet 40 of 42.

Cost of excavation for approach footing included with Concrete Structures.

Cost of preformed joint seal included with Concrete Superstructure.

For Pourous Granular Embankment (Special), see sheet 25 of 42.

Minimum lap length for #4 bars =2'-0".
Minimum lap length for #5 bars =2'-6".

Reinforcement bars designated (E) shall be epoxy coated.

LEGEND

b.s. denotes bottom of slab
t.s. denotes top of slab
b.f. denotes bottom of footing
t.f. denotes top of footing

DESIGNED	- DPW
CHECKED	- ASP
DRAWN	- BEM
CHECKED	- ASP

* Tilt #9 b5(E) bars as required to maintain clearance.
**Cost Included with Concrete Superstructure.

DLZ
DLZ Illinois, Inc.
85 W. Algonquin Rd. Ste. 220
Arlington Heights Il 60005
(847)-640-0840

WEST APPROACH SLAB
STRUCTURE NUMBER 016-0610

SHEET NO. 18 OF 42 SHEETS	F.A. RTE.	SECTION	COUNTY	TOTAL SHEETS	SHEET NO.
	94	0101.8B	COOK	139	94
			CONTRACT NO. 60C18		
		ILLINOIS	FED. AID PROJECT		