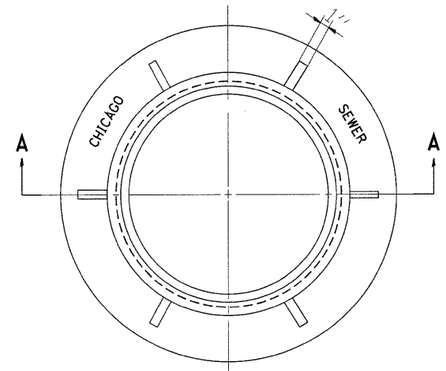


PLAN

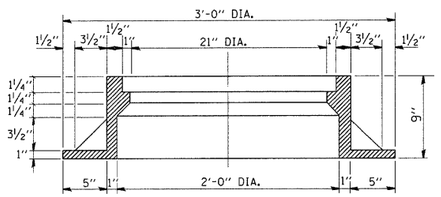


SECTION A-A

NOTE: METAL PLATES MUST BE FURNISHED FOR PERFORATED LIDS ON MANHOLES

## CHICAGO STANDARD MANHOLE FRAME

SCALE: 1½"=1'-0"
MATERIAL: CAST IRON

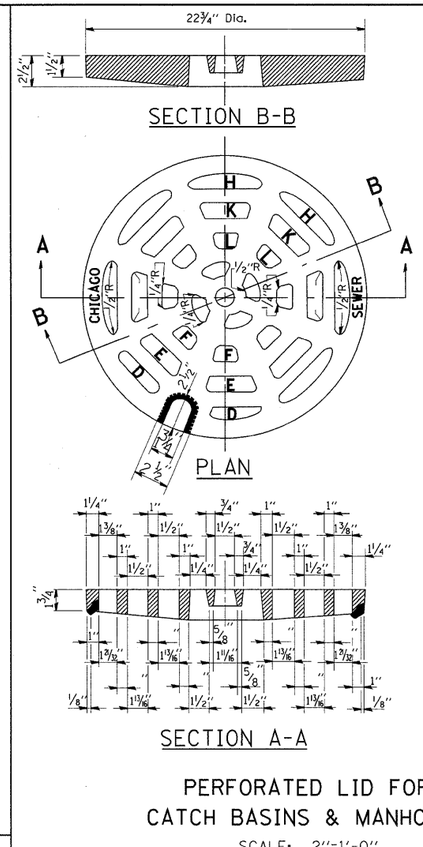


## PERFORATED LID FOR CATCH BASINS & MANHOLES

SCALE: 2"=1'-0"
MATERIAL: CAST IRON

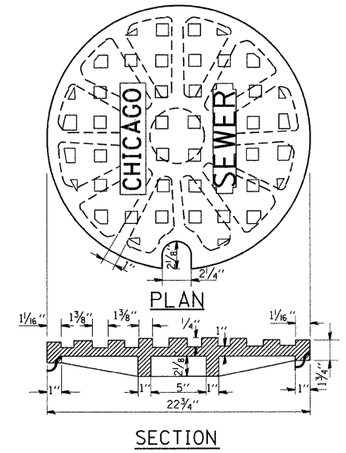


## SOLID LID FOR MANHOLES

SCALE: NONE
MATERIAL: CAST IRON

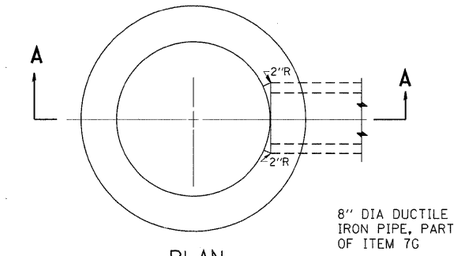


PLAN
( FRAME & LID NOT SHOWN )

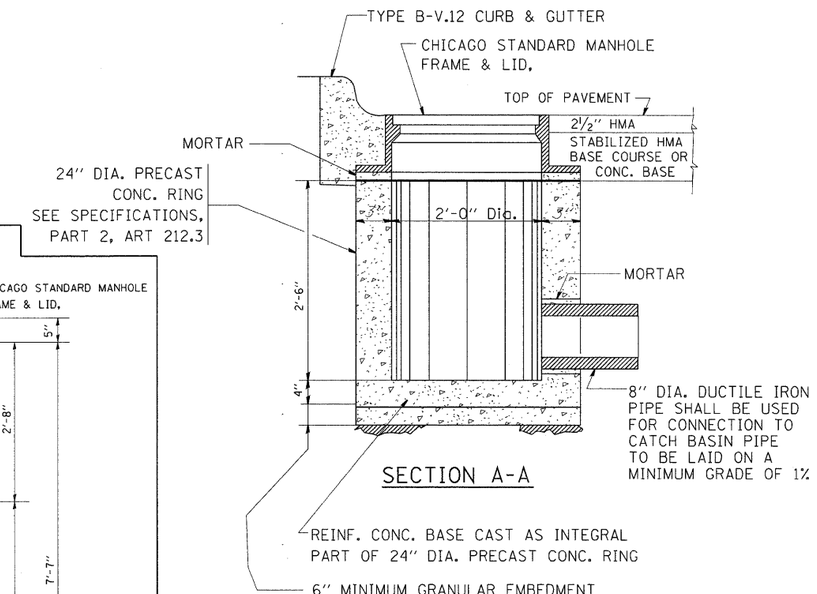


SECTION A-A

## STANDARD INLETS

SCALE 1"= 1'-0"
ITEM 12

THIS INLET DETAIL IS SOMETIMES REFERRED TO AS "CHICAGO STANDARD INLET, TYPE A"

NOTE:
INLETS SHALL NOT BE CONSTRUCTED UNLESS IT IS IMPOSSIBLE TO CONSTRUCT A CATCH BASIN. THE CONTRACTOR SHALL HAVE THE DEPARTMENT OF SEWERS APPROVAL BEFORE CONSTRUCTING INLETS.

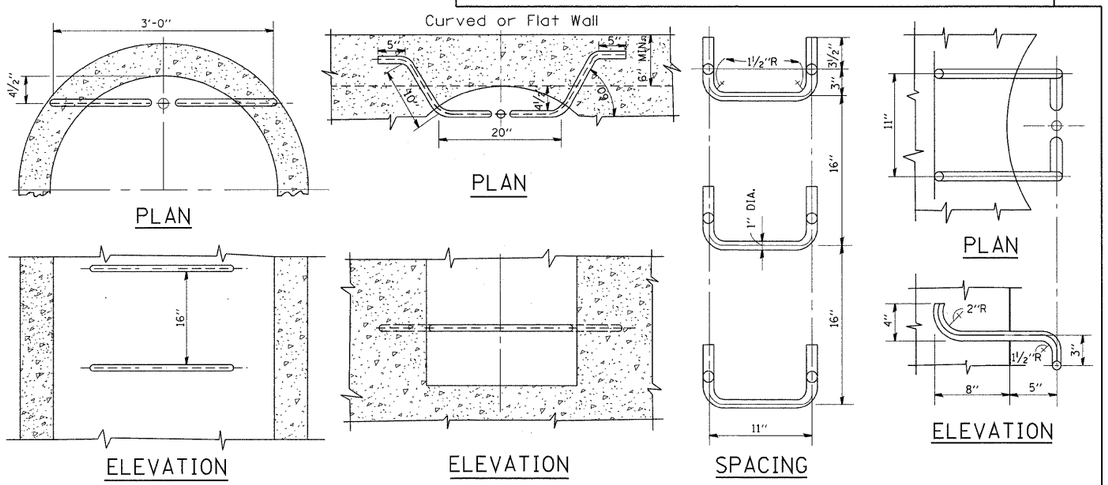


## STANDARD LADDER RUNGS

ALL LADDER RUNGS SHALL BE ALUMINUM OR GALVANIZED WROUGHT IRON AS SPECIFIED IN THE SPECIFICATIONS, PART 2, ARTICLE 214.2. RUNGS SHALL BE 1" DIAMETER OR OF A SHAPE HAVING AN EQUIVALENT CROSS-SECTIONAL AREA.

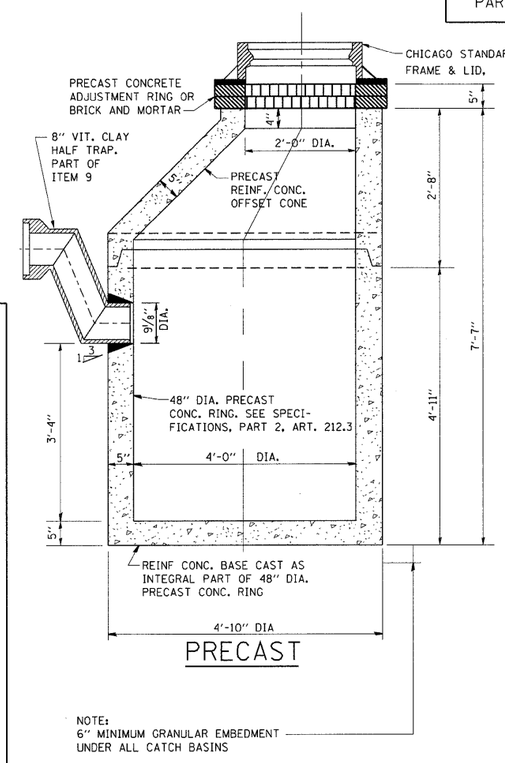


PRECAST

NOTE:
6" MINIMUM GRANULAR EMBEDMENT UNDER ALL CATCH BASINS

## STANDARD CATCH BASINS

SCALE: ¾"= 1'-0"
ITEM 9

CITY OF CHICAGO
DEPARTMENT OF SEWERS
ENGINEERING DIVISION

| | | | |
|---|---|---|---|
| FILE NAME = W:\dstatd\22x34\bd47.dgn | USER NAME = gagliaobt | DESIGNED - M. GOMEZ | REVISED - |
| | | DRAWN - | REVISED - |
| | PLOT SCALE = 50.0000 ' / IN. | CHECKED - | REVISED - |
| | PLOT DATE = 1/4/2008 | DATE - 01-25-01 | REVISED - |

**STATE OF ILLINOIS**
**DEPARTMENT OF TRANSPORTATION**

**CITY OF CHICAGO**
**CATCH BASIN, INLET AND MANHOLE DETAILS**

SCALE: NONE | SHEET NO. 1 OF 1 SHEETS | STA. | TO STA.

| F.A.I. RTE. | SECTION | COUNTY | TOTAL SHEETS | SHEET NO. |
|---|---|---|---|---|
| 94 | 0101.8B | COOK | 139 | 120 |
| | BD600-13 (BD47) | CONTRACT NO. 60C18 | | |
| FED. ROAD DIST. NO. 1 | ILLINOIS | FED. AID PROJECT | | |