STATE OF ILLINOIS
DEPARTMENT OF TRANSPORTATION

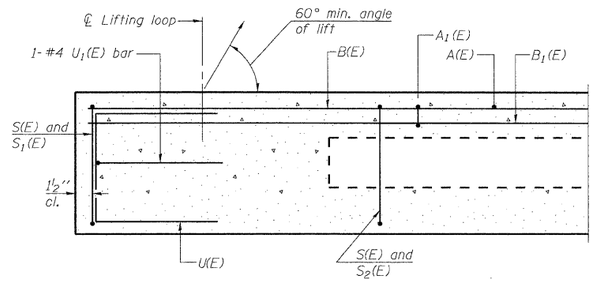

SECTION C-C

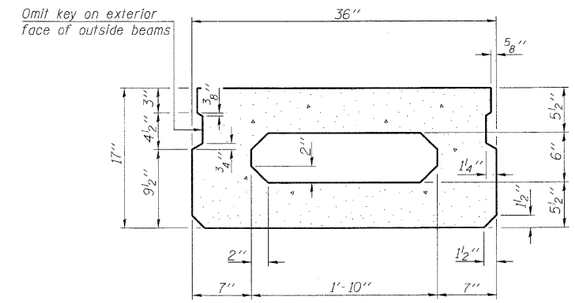

SECTION A-A
(Showing dimensions)

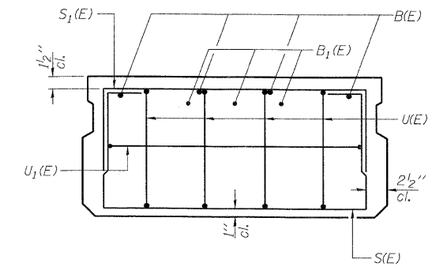

VIEW B-B

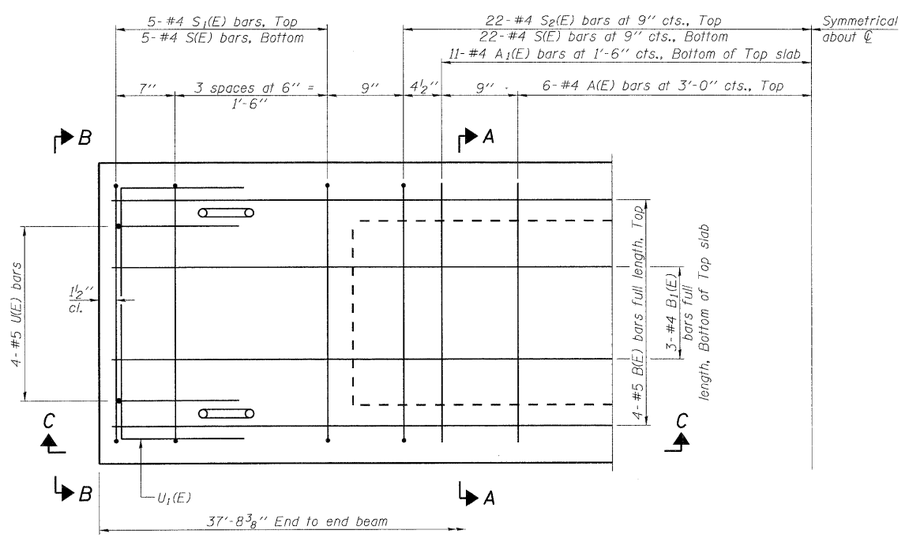

PLAN VIEW

Note: Spacing of S(E) and S2(E) bars may be adjusted up to 4" in the immediate area of the transverse tie diaphragms to miss the block outs for the transverse ties.

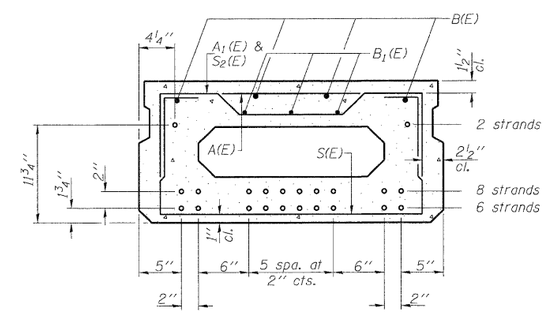

SECTION A-A
(Showing reinforcement and permissible strand locations)

Note: Place the number of strands specified in each row symmetrically about the centerline of beam in the permissible strand locations shown.

BAR LIST
ONE BEAM ONLY
(For information only)

Bar	No.	Size	Length	Shape
A(E)	12	#4	2'-7"	
A1(E)	22	#4	2'-10"	
B(E)	4	#5	37'-5"	
B1(E)	3	#4	37'-5"	
S(E)	54	#4	5'-9"	
S1(E)	10	#4	4'-3"	
S2(E)	44	#4	4'-6"	
U(E)	8	#5	3'-8"	
U1(E)	2	#4	5'-0"	

Note: See sheet S16 of S20 for additional details and Bill of Material.

DESIGNED -	SLV
CHECKED -	DJB
DRAWN -	SLV
CHECKED -	DJB

LONCO, INC.
CONSULTING ENGINEERS
1560 WALL ST. SUITE 222
NAPERVILLE, ILLINOIS 60563 PH: (630) 577-9100

17" x 36" PPC DECK BEAMS
STRUCTURE NO. 049-0059

SHEET NO. S15 OF S20 SHEETS	F.A.P. RTE.	SECTION	COUNTY	TOTAL SHEETS	SHEET NO.
	303	136 B-1	LAKE	43	30
	D-91-290-09		CONTRACT NO. 60F93		
	FED. ROAD DIST. NO. _	ILLINOIS	FED. AID PROJECT		