STATE OF ILLINOIS
DEPARTMENT OF TRANSPORTATION

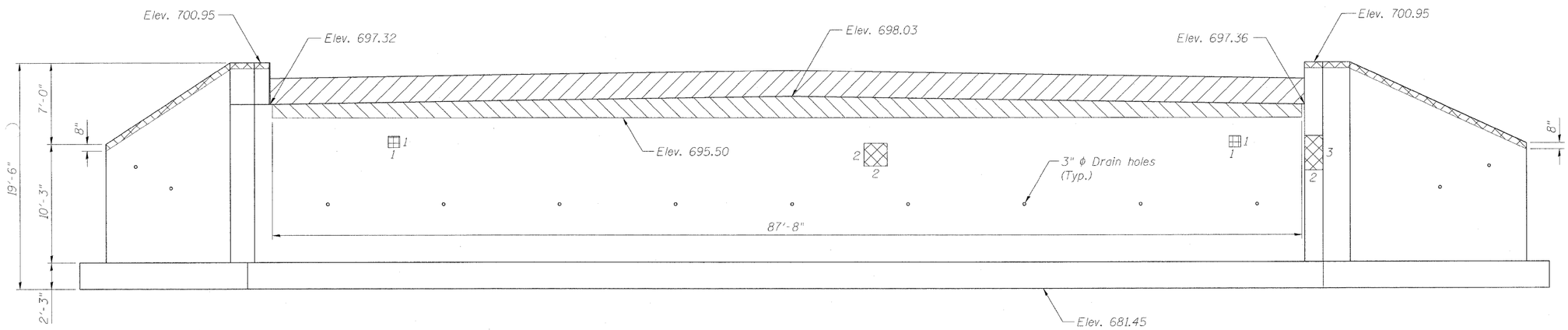

EXISTING EAST ABUTMENT ELEVATION

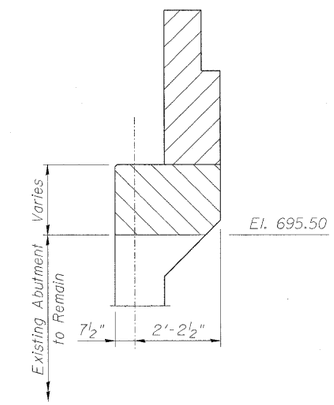

SECTION THRU EAST ABUTMENT

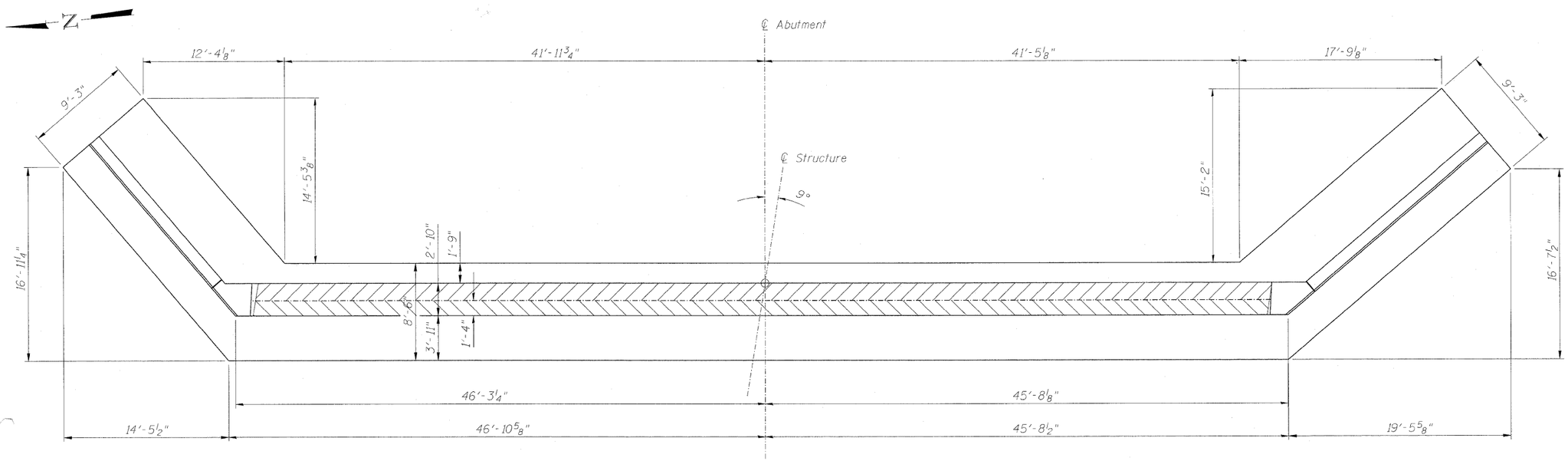

EXISTING EAST ABUTMENT PLAN

Note:
Clean and reuse existing bars at top of wingwalls. Cost included in item for "Structural Repair of Concrete (Depth greater than 5 inches)."
See sheet S21 of S27 for Bill of Materials.

EXISTING EAST ABUTMENT
STRUCTURE NO. 016-0581

DESIGNED	MAH
CHECKED	JMH
DRAWN	DR
CHECKED	JMH

Legend:

- Concrete Removal (Backwall/Abutment)
- Concrete Removal (Beam Seat)
- Structural Repair of Concrete (Depth less than 5 inches)
- Structural Repair of Concrete (Depth greater than 5 inches)

COLLINS ENGINEERS INC.
123 N. WACKER DR., SUITE 300
CHICAGO, IL 60606
(312) 704-9300
ILLINOIS PROFESSIONAL DESIGN FIRM LICENSE NO. 184-000993

SHEET NO. S20 OF S27 SHEETS

F.A.P. RTE.	SECTION	COUNTY	TOTAL SHEETS	SHEET NO.
339	116-Y-2-BR-1	COOK	74	40
		CONTRACT NO. 60J00		
	ILLINOIS FED. AID PROJECT			