STATE OF ILLINOIS
DEPARTMENT OF TRANSPORTATION

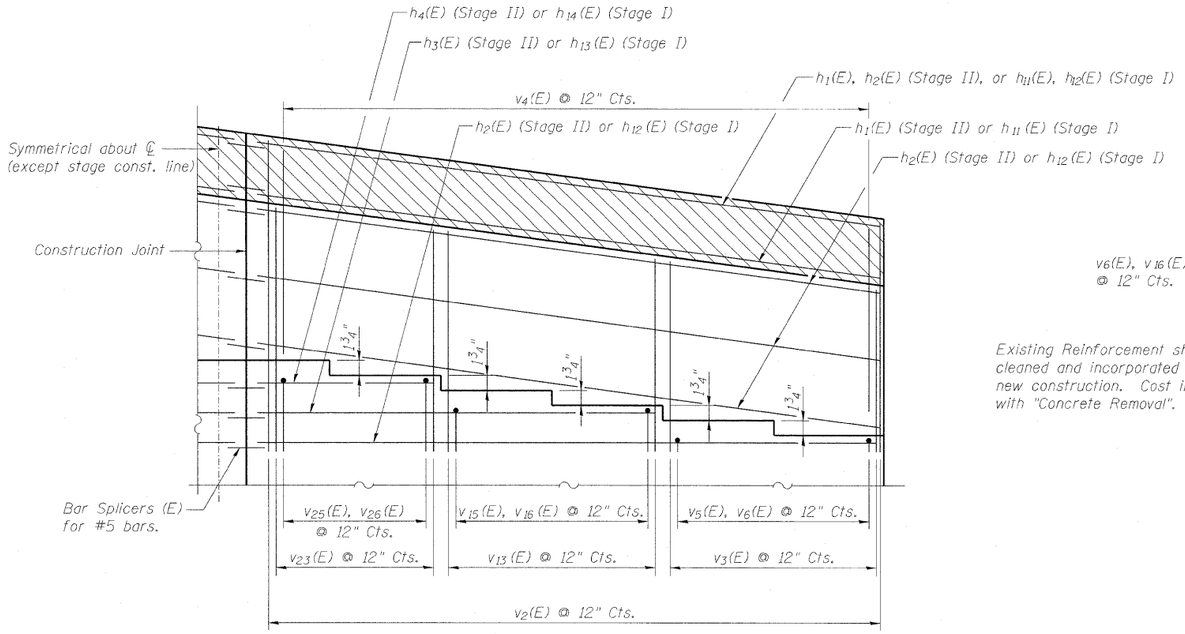

ABUTMENT BEARING SEAT PARTIAL ELEVATION
(Typ. Both Abutments)

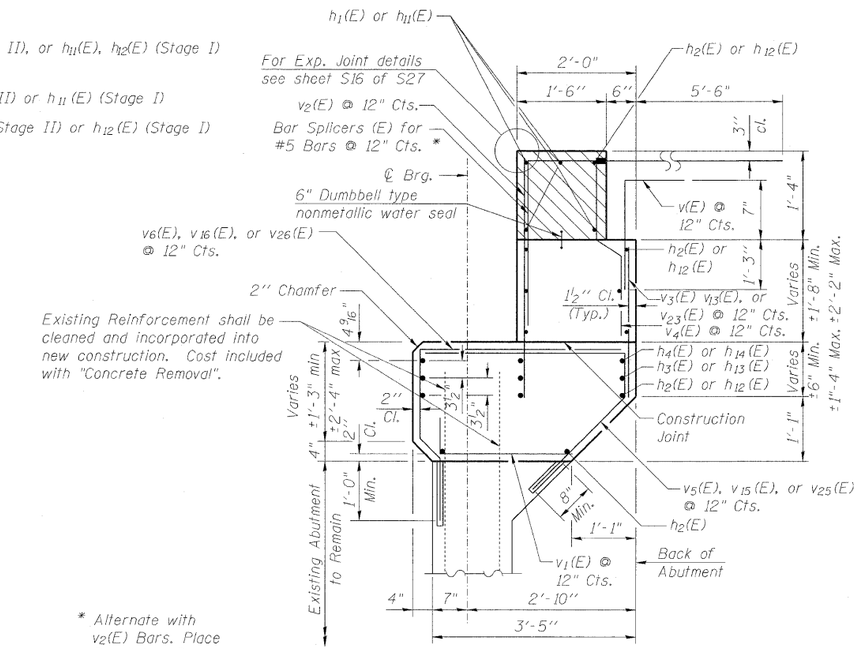

* Alternate with $v_2(E)$ Bars. Place Parallel to Beams.

SECTION THRU ABUTMENTS
(Typ. Both Abutments)

BILL OF MATERIAL
(For Two Abutments)

Bar	No.	Size	Length	Shape
$h_1(E)$	8	#6	45'-9"	
$h_2(E)$	24	#5	45'-9"	
$h_3(E)$	6	#5	31'-2"	
$h_4(E)$	6	#5	16'-4"	
$h_{11}(E)$	8	#6	42'-1"	
$h_{12}(E)$	24	#5	42'-1"	
$h_{13}(E)$	6	#5	27'-6"	
$h_{14}(E)$	6	#5	12'-8"	
$v(E)$	178	#5	3'-9"	
$v_1(E)$	178	#4	2'-6"	
$v_2(E)$	178	#4	4'-2"	
$v_3(E)$	64	#4	2'-0"	
$v_4(E)$	178	#4	3'-0"	
$v_5(E)$	64	#4	5'-9"	
$v_6(E)$	64	#4	5'-10"	
$v_{13}(E)$	64	#4	2'-4"	
$v_{15}(E)$	64	#4	6'-1"	
$v_{16}(E)$	64	#4	6'-1"	
$v_{23}(E)$	64	#4	2'-7"	
$v_{25}(E)$	64	#4	6'-4"	
$v_{26}(E)$	64	#4	6'-5"	
Reinforcement Bars, Epoxy Coated			Pound	7,505
Concrete Structures			Cu. Yds.	87.5
Concrete Sealer			Sq. Ft.	930
Structure Excavation			Cu. Yds.	98

Note:
Any reinforcement bars that are damaged during concrete removal operation shall be repaired or replaced using approved bar splicer or anchorage system. Cost included with "Concrete Removal."
Pour steps monolithically with cap.

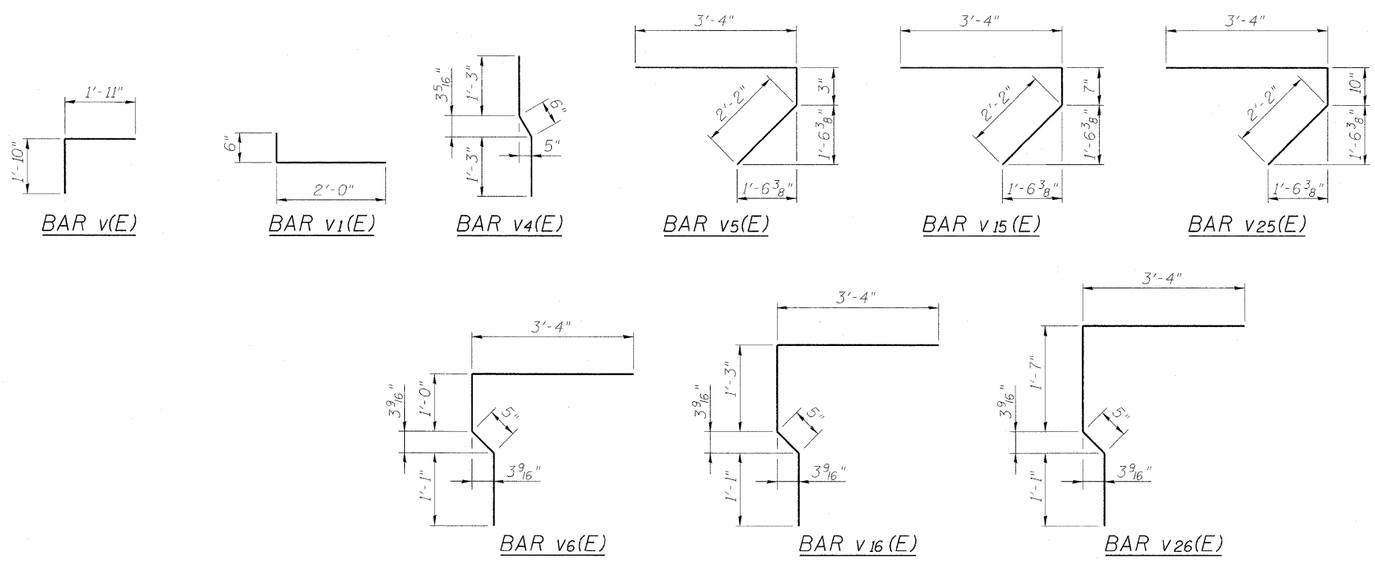

Legend:
To be Poured after Beams have been erected
New Construction

ABUTMENT DETAILS
STRUCTURE NO. 016-0581

DESIGNED	MAH
CHECKED	JMH
DRAWN	DR
CHECKED	JMH

COLLINS ENGINEERS INC.
123 N. WACKER DR., SUITE 300
CHICAGO, IL 60606
(312) 704-9300
ILLINOIS PROFESSIONAL DESIGN FIRM LICENSE NO. 184-000993

SHEET NO. S24 OF S27 SHEETS

F.A.P. RTE.	SECTION	COUNTY	TOTAL SHEETS	SHEET NO.
339	116-Y-2-BR-1	COOK	74	44
		CONTRACT NO. 60J00		
	ILLINOIS	FED. AID PROJECT		