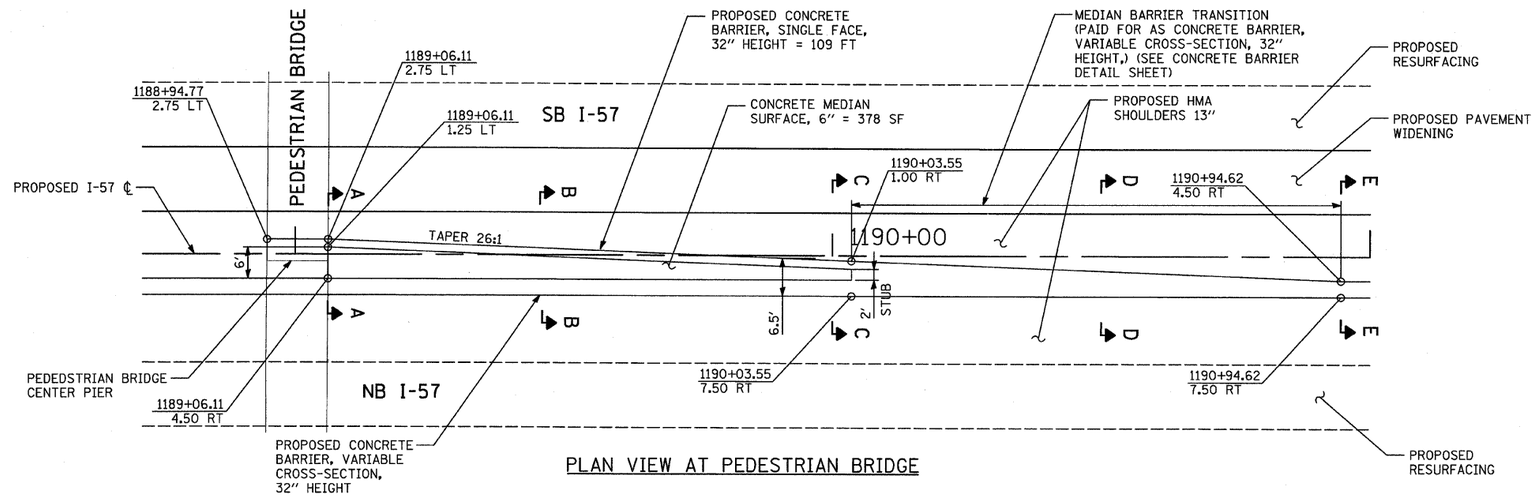

PLAN VIEW AT PEDESTRIAN BRIDGE

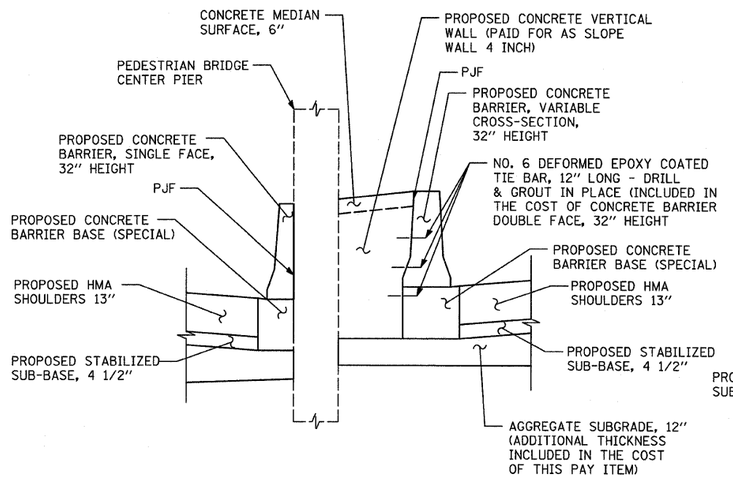

SECTION A-A

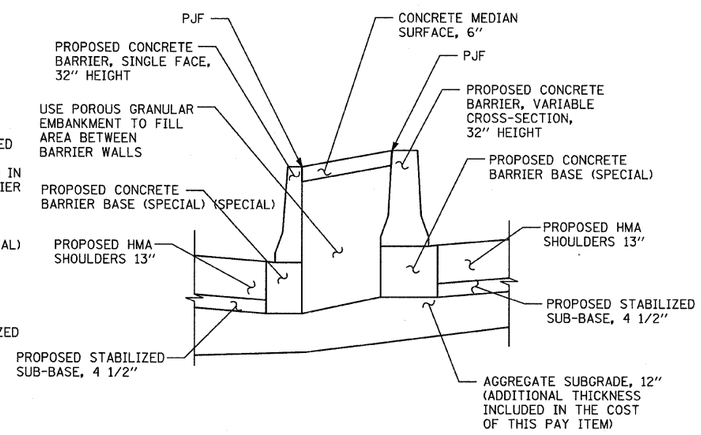

SECTION B-B

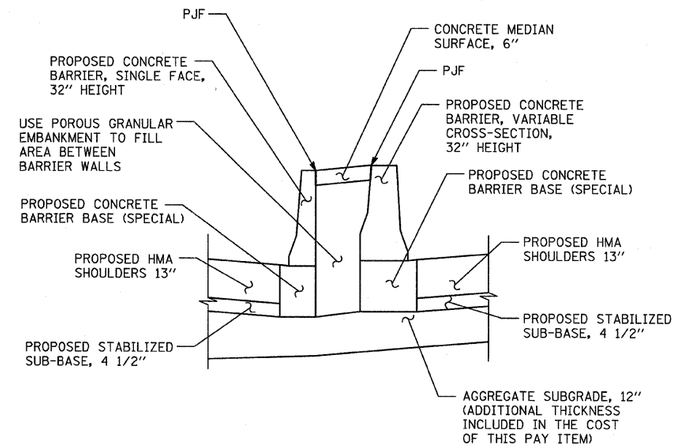

SECTION C-C

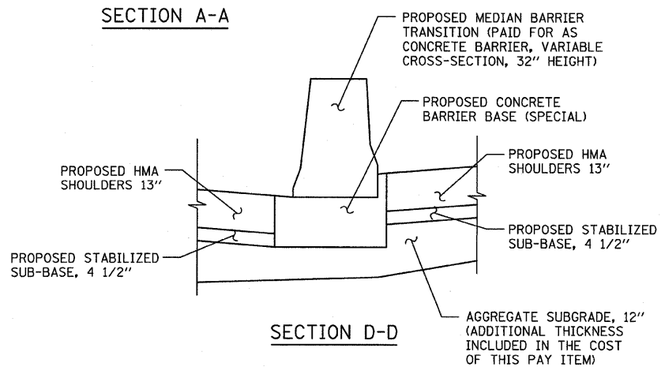

SECTION D-D

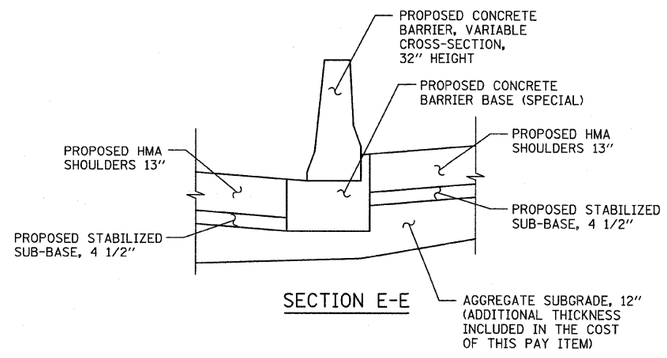

SECTION E-E

TYLIN INTERNATIONAL	USER NAME =	DESIGNED - EMK	REVISED - 4/29/2010
		DRAWN - EMK	REVISED -
	PLOT SCALE =	CHECKED - JPM	REVISED -
	PLOT DATE =	DATE - 3/18/2010	REVISED -

STATE OF ILLINOIS
DEPARTMENT OF TRANSPORTATION

I-57 AT I-294 INTERCHANGE PROJECT
PEDESTRIAN BRIDGE PROTECTION

SCALE: N/S | SHEET NO. OF SHEETS | STA. TO STA.

F.A.I. RTE.	SECTION	COUNTY	TOTAL SHEETS	SHEET NO.
57	1414.2B	COOK	516	61
		CONTRACT NO. 60J27		
FED. ROAD DIST. NO.	ILLINOIS	FED. AID PROJECT		

P:\602540(57-294)\Road\P1_I57 BR\P1_DTL_PED_BR.dgn

P:\602540(57-294)\Road\P1_I57 BR\P1_DTL_PED_BR.dgn
4:04:44 PM
4/28/2010