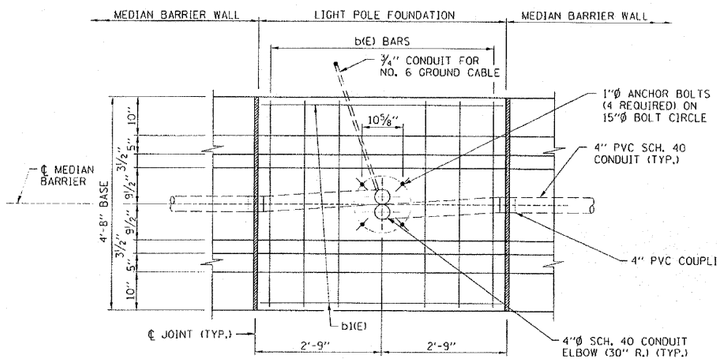

PLAN VIEW

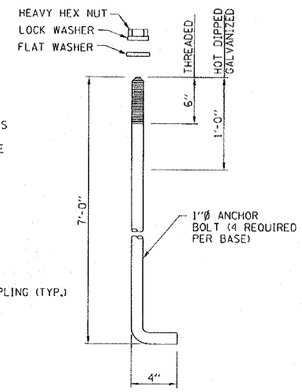

ANCHOR BOLT DETAIL

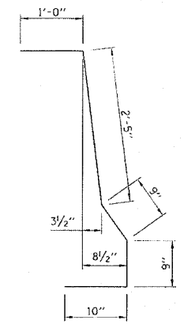

d1(E) BAR

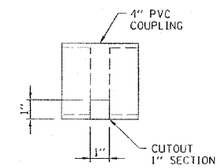

DETAIL A

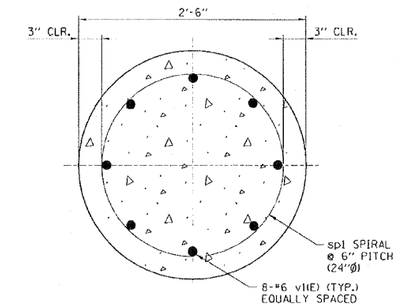

SECTION B-B

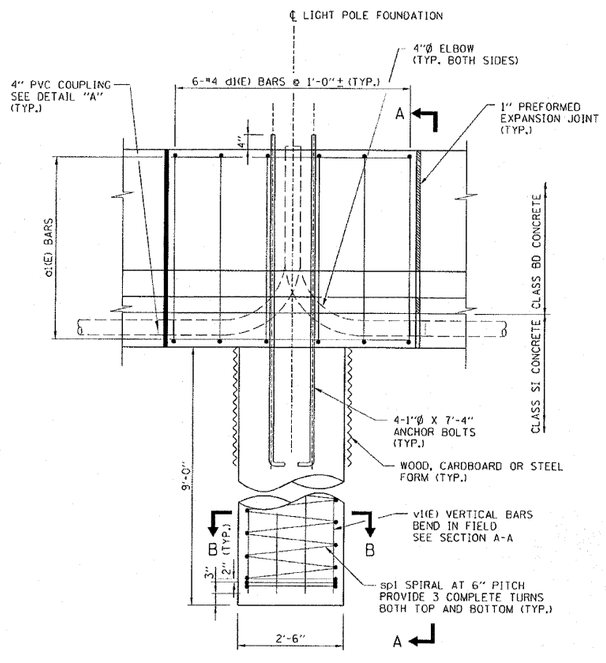

ELEVATION

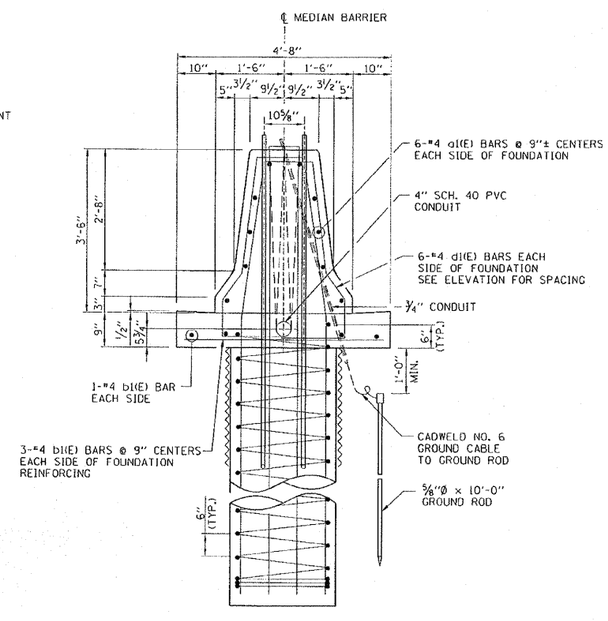

SECTION A-A

REINFORCING BAR SCHEDULE					
BAR	NO.	SIZE	LENGTH	WT. LBS.	SHAPE
a1(E)	12	#4	5'-0"	40	
b(E)	6	#4	4'-2"	17	
b1(E)	2	#4	5'-2"	7	
d1(E)	12	#4	5'-9"	46	
sp1	•	#4	•		
v1(E)	8	#6	11'-9"	142	

• SEE SECT. A-A

SHEET E15

TYPE 1 CENTERED CAISSON, 42" BARRIER

APPROVED Jeff Daley CHIEF ENGINEER DATE 1-1-2007

DATE	REVISIONS

Illinois Tollway
Open Roads for a Faster Future

MEDIAN BARRIER LIGHT POLE FOUNDATION DETAILS

STANDARD H8-00