STATE OF ILLINOIS
DEPARTMENT OF TRANSPORTATION

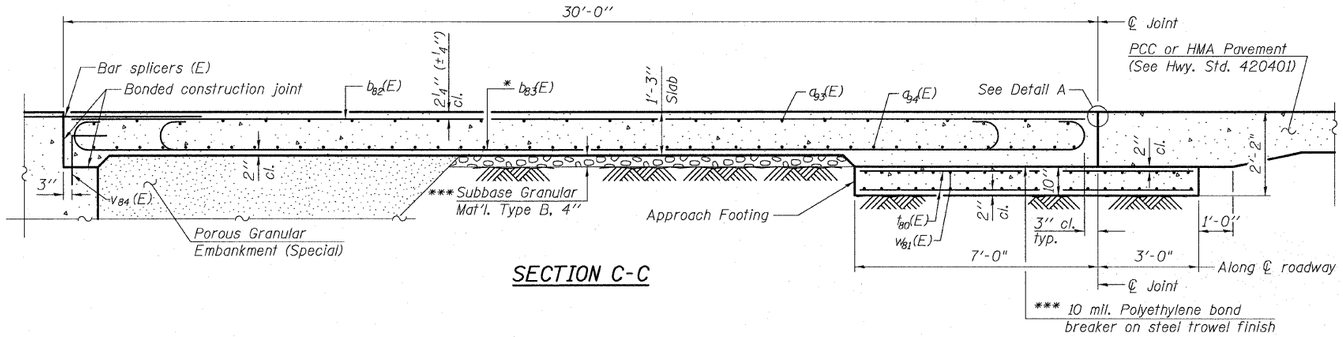

SECTION C-C

Notes:
See sheet 24 of 62 for Detail A.
Approach slab and parapet concrete shall be paid for as Concrete Superstructure.
Approach footing concrete shall be paid for as Concrete Structures.
Reinforcement shall be paid for as Reinforcement Bars, Epoxy Coated.
For v_{84}(E) bar details, see sheet 46 of 62.
The approach footing maximum applied service bearing pressure (Qmax) = 2.0 ksf.
For bar splicer details, see sheet 55 of 62.
Cost of excavation for approach footing included with Concrete Structures.

The quantity for Bridge Deck Grooving & Protective Coat for approach slab is included with the quantities on sheet 2 of 62.

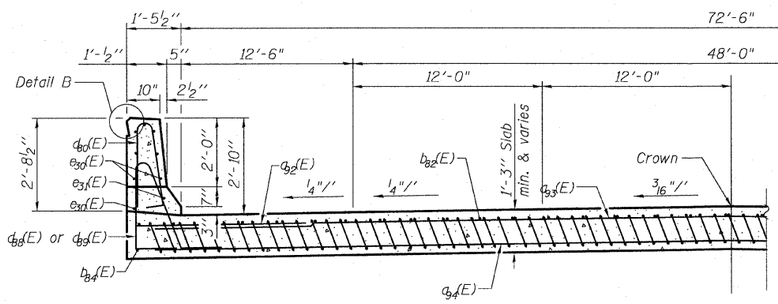

NEAR ABUTMENT

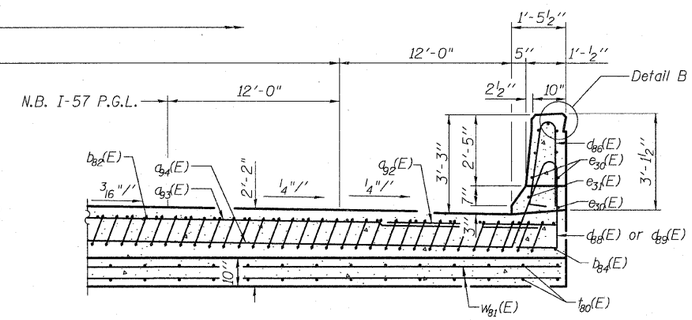

AT APPROACH FOOTING

SECTION D-D
(See Plan for dimensions not shown)

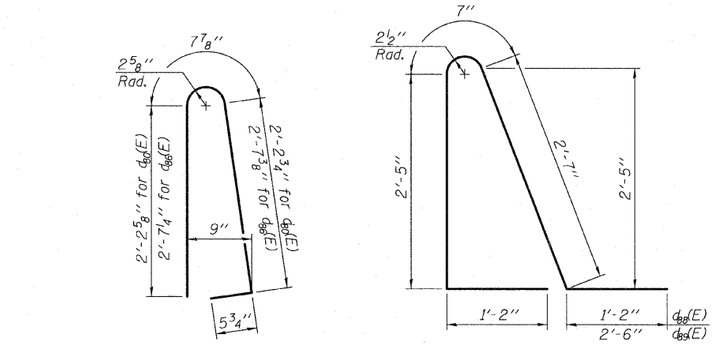

BAR d_{80}(E) & d_{86}(E)

BAR d_{88}(E) & d_{89}(E)

* Tilt #9 b_{83}(E) bars as required to maintain clearance.

*** Cost included with Concrete Superstructure.

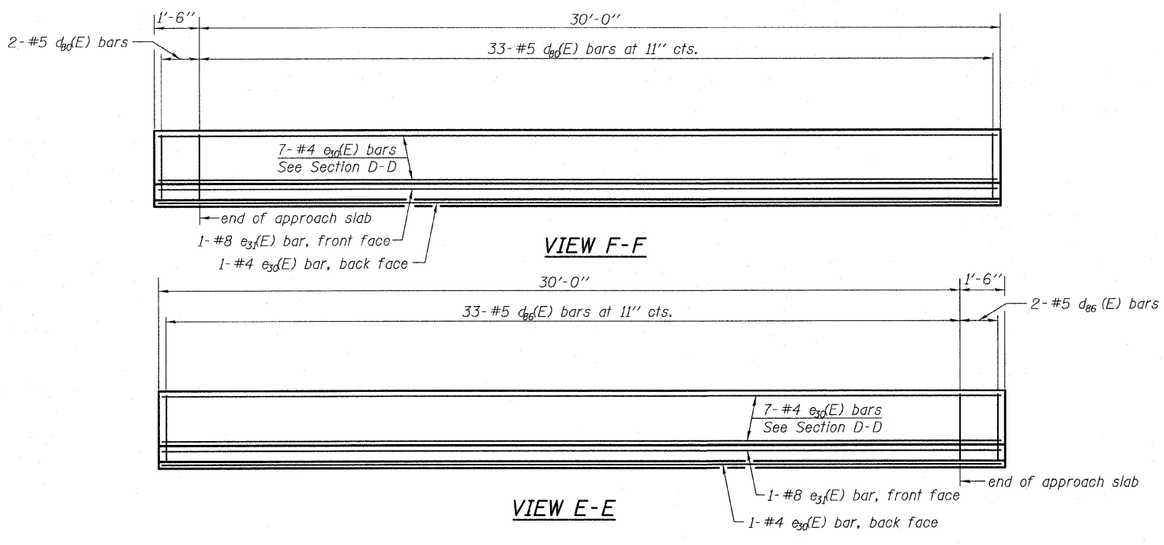

VIEW F-F

VIEW E-E

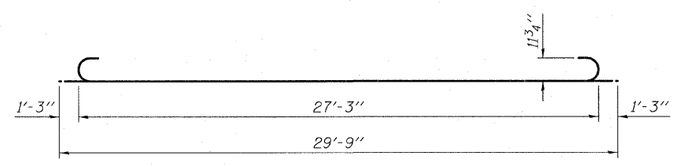

BAR b_{83}(E)

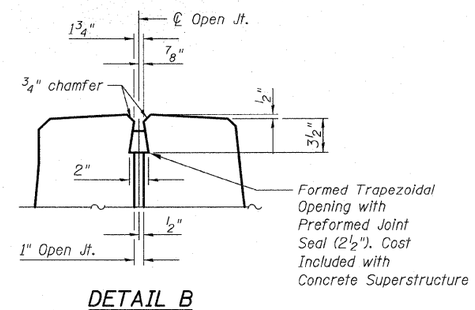

DETAIL B

BILL OF MATERIAL

Bar	No.	Size	Length	Shape
a_{92}(E)	50	#6	6'-6"	
a_{93}(E)	75	#4	27'-3"	
a_{94}(E)	92	#5	39'-6"	
b_{82}(E)	61	#4	29'-8"	
b_{83}(E)	182	#9	29'-9"	
b_{84}(E)	2	#4	31'-2"	
d_{80}(E)	35	#5	5'-7"	
d_{88}(E)	66	#5	7'-11"	
d_{89}(E)	4	#5	9'-3"	
d_{86}(E)	35	#5	6'-4"	
e_{30}(E)	16	#4	31'-2"	
e_{31}(E)	2	#8	31'-2"	
t_{80}(E)	152	#4	9'-9"	
w_{81}(E)	120	#5	27'-5"	
Concrete Superstructure			Cu. Yd.	111.5
Concrete Structures			Cu. Yd.	23.5
(1.) Reinforcement Bars, Epoxy Coated			Pound	31,250

(1.) 4,420 pounds billed in Substructure
Total in Total Bill of Material on
sheet 2 of 62.

WEST APPROACH SLAB NB I-57 - 2
STRUCTURE NO. 016-1252

TY·LIN INTERNATIONAL

DESIGNED	-	MRB
CHECKED	-	AMD
DRAWN	-	MRB
CHECKED	-	LS,SP,PDF
DATE	-	03/18/10

REVISIONS	
NAME	DATE

SHEET NO. 25
62 SHEETS

F.A.I RTE.	SECTION	COUNTY	TOTAL SHEETS	SHEET NO.
57	1414.2B	COOK	516	338
	068-1414.2-C.F.	CONTRACT NO. 60J27		
FED. ROAD DIST. NO. 1	ILLINOIS	FED. AID PROJECT		

P:\602540(57-294)\STRUCTURAL\I-57 OVER RAMP B\final submittal 03-17-2010\final submittal 03172010\016252-60J27-025-W_APPR4.dgn 10:41:04 AM

3/18/2010