STATE OF ILLINOIS
DEPARTMENT OF TRANSPORTATION

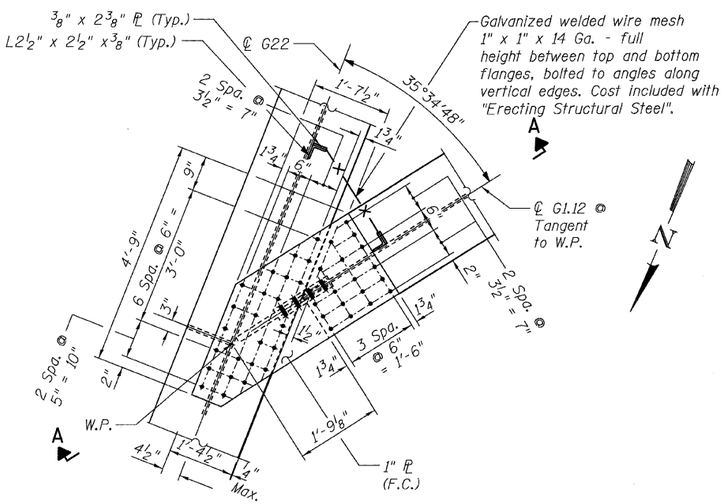

DETAIL 1
(Top Flange)

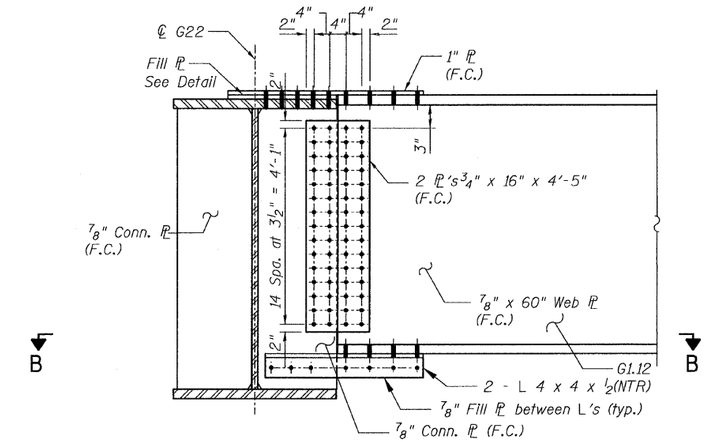

SECTION A-A

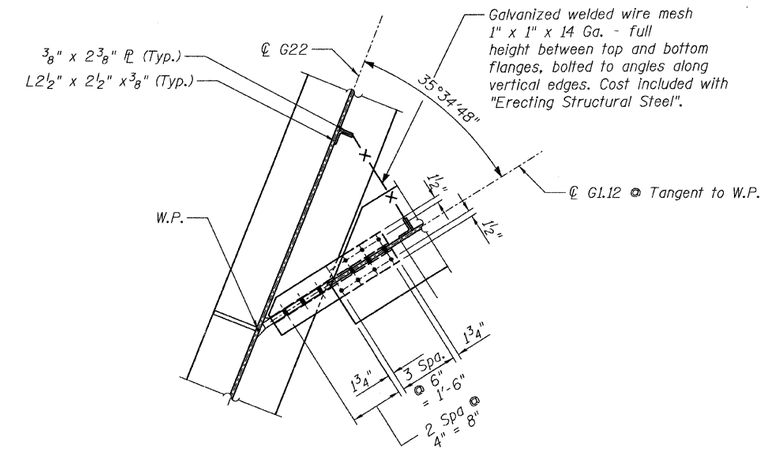

SECTION B-B
(Bottom Flange)

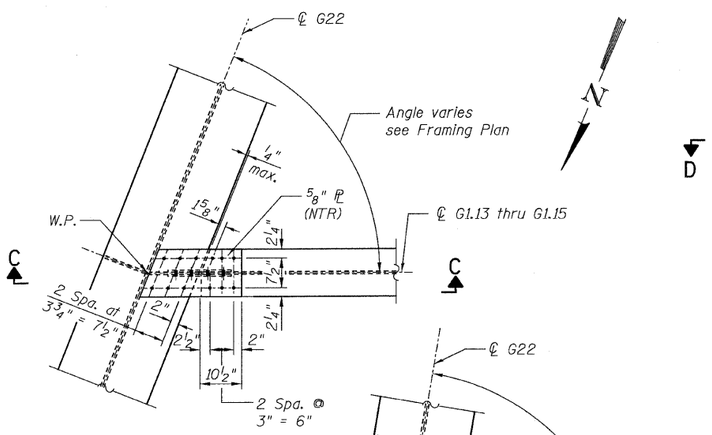

DETAIL 2
(Top Flange)
G1.13 thru G1.15

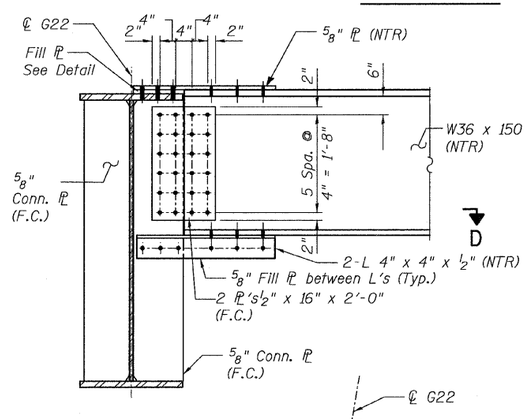

SECTION C-C

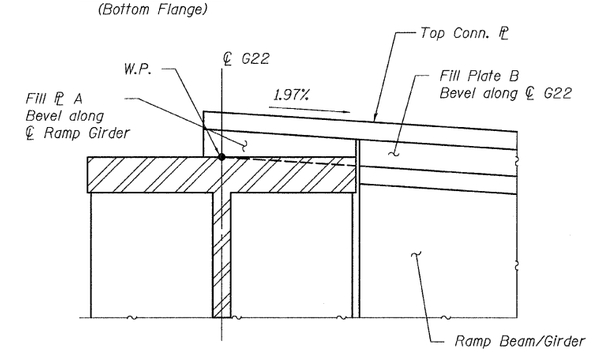

FILL PL DETAIL

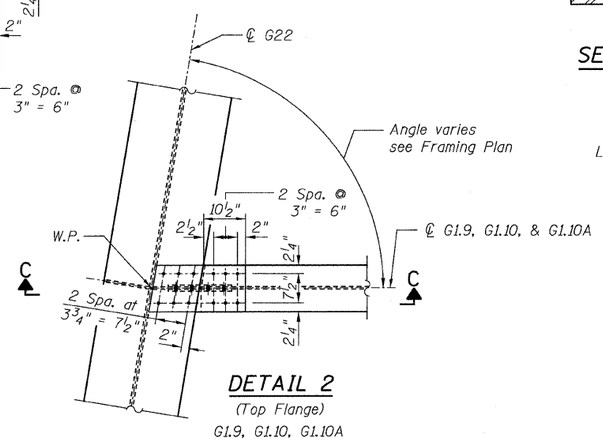

DETAIL 2
(Top Flange)
G1.9, G1.10, G1.10A

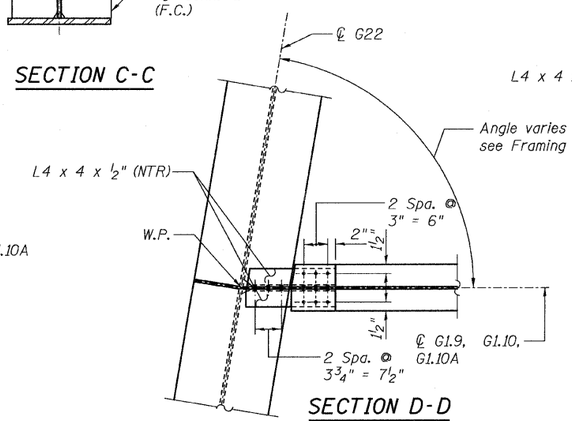

SECTION D-D
(Bottom Flange)
G1.9, G1.10, G1.10A

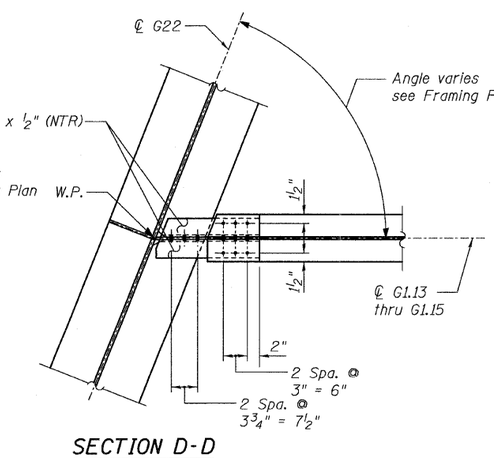

SECTION D-D
(Bottom Flange)
G1.13 thru G1.15

NOTES:

1. All steel shall be AASHTO M270 Grade 50.
2. For Details 1 and 2 locations, see Sheet 41.
3. F.C. - denotes Fracture Critical Material, AASHTO Zone II.
4. Load carrying components designated "NTR" shall conform to the Supplemental Requirements for Notch Toughness, Zone 2.

CONNECTION DETAILS 1&2
RAMP 1 FLARE
STRUCTURE NO. 016-0724

T·Y·LIN INTERNATIONAL

DESIGNED	- EKH, JMA	REVISIONS	
CHECKED	- AMD,	NAME	DATE
DRAWN	- EKH, JMA		
CHECKED	- AMD,		
DATE	- 08/02/10		

SHEET NO. 65
137 SHEETS

F.A.I RTE.	SECTION	COUNTY	TOTAL SHEETS	SHEET NO.
55	0711.2R & 1011.1BR	COOK	200	95
		CONTRACT NO. 60L39		
FED. ROAD DIST. NO. 1	ILLINOIS	FED. AID PROJECT		

8/13/2010

p:\01345\beam and bearing fabrication\55f1f-ramedtl11.dgn 6:17:03 PM