STATE OF ILLINOIS
DEPARTMENT OF TRANSPORTATION

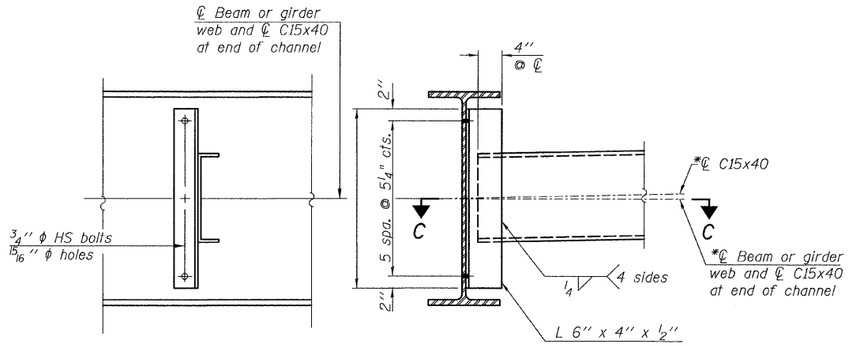

INTERIOR DIAPHRAGM

(D3.2)
(6 REQUIRED)

Note:
*Alternate channels C15x50 are permitted to facilitate material acquisition. Calculated weight of structural steel is based on the lighter section.
The alternate, if utilized, shall be provided at no additional cost to the Department.

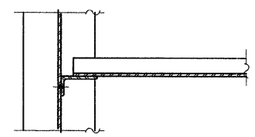

SECTION C-C

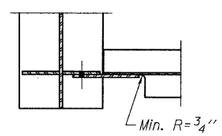

SECTION A-A

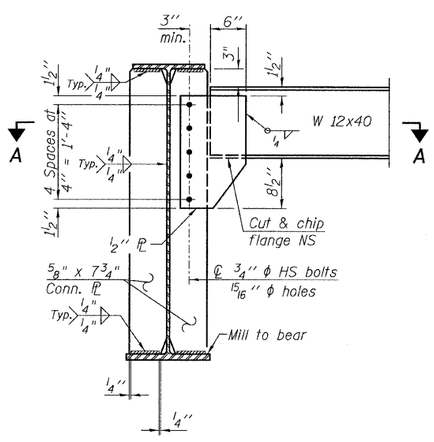

END DIAPHRAGM

(D3.1)
(6 REQUIRED)

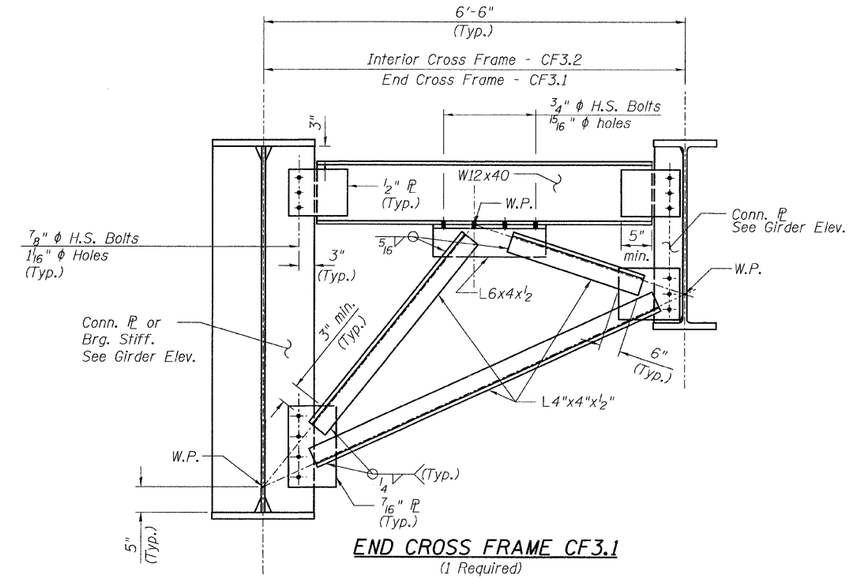

END CROSS FRAME CF3.1

(1 Required)

INTERIOR CROSS FRAME CF3.2

(4 Required)

NOTES:

1. Two hardened washers shall be required over all oversize holes for diaphragms.
2. All cross frames or diaphragms shall be installed as steel is erected and secured with erection pins and bolts except as otherwise noted. Individual cross frames or diaphragms at supports may be temporarily disconnected to install bearing anchor rods.
3. All bolts shall be ¾" ϕ with 15/16" ϕ holes unless otherwise noted.

DIAPHRAGMS & DETAILS
RAMP 3 FLARE
STRUCTURE NO. 016-0724

TYLIN INTERNATIONAL

DESIGNED	-	JPN	
CHECKED	-	AMD.	
DRAWN	-	JMA	
CHECKED	-	AMD.	
DATE	-	08/02/10	

REVISIONS	
NAME	DATE

SHEET NO. 112
137 SHEETS

F.A.I RTE.	SECTION	COUNTY	TOTAL SHEETS	SHEET NO.
55	0711.2R & 1011.1BR	COOK	200	142
		CONTRACT NO. 60L39		
FED. ROAD DIST. NO. 1	ILLINOIS	FED. AID PROJECT		

2:07:28 PM
p:\01345\beam and bearing fabrication\55f3framedtl19.dgn
8/2/2010