F.A.I. RTE.	SECTION	COUNTY	TOTAL SHEETS	SHEET NO.
55	1011.1B-I-1	COOK	200	1
	ILLINOIS	CONTRACT NO. 60L39		

*200 + 2 = 202

9-17-10 LETTING ITEM 075

STATE OF ILLINOIS
DEPARTMENT OF TRANSPORTATION
DIVISION OF HIGHWAYS

PROPOSED
HIGHWAY PLANS

FAI–55 – INTERSTATE 55 AT CENTRAL AVENUE
SECTION 1011.1B-I-1
PROJECT :ACIM-055-7(258)286
BEAM AND BEARING FABRICATION
COOK COUNTY
C-91-691-10

PROJECT LOCATED IN VILLAGE OF FOREST VIEW

FOR INDEX OF SHEETS, SEE SHEET NO. 2

DESIGN DESIGNATION

CENTRAL AVENUE: 35,000 (20) PRINCIPAL ARTERIAL 5.0 (PCC–20)
I–55 (RAMPS): 14,000 (20) INTERSTATE FREEWAY 5.0 (PCC–20)

		ADT (1996)	ADT (2020)	DESIGN SPEED	POSTED SPEED
CENTRAL AVENUE:	SOUTH	32,200	35,000	45MPH	30MPH
	OVER I–55	27,300	29,000	45MPH	35MPH
	NORTH	21,900	24,000	45MPH	45MPH
INTERSTATE I–55:	EASTBOUND	70,600	71,000	70MPH	55MPH
	WESTBOUND	71,500	72,000	70MPH	55MPH
RAMPS:	ENTERING I–55	12,000	14,000	60MPH	35MPH
	EXITING I–55	12,000	14,000	30MPH	30MPH

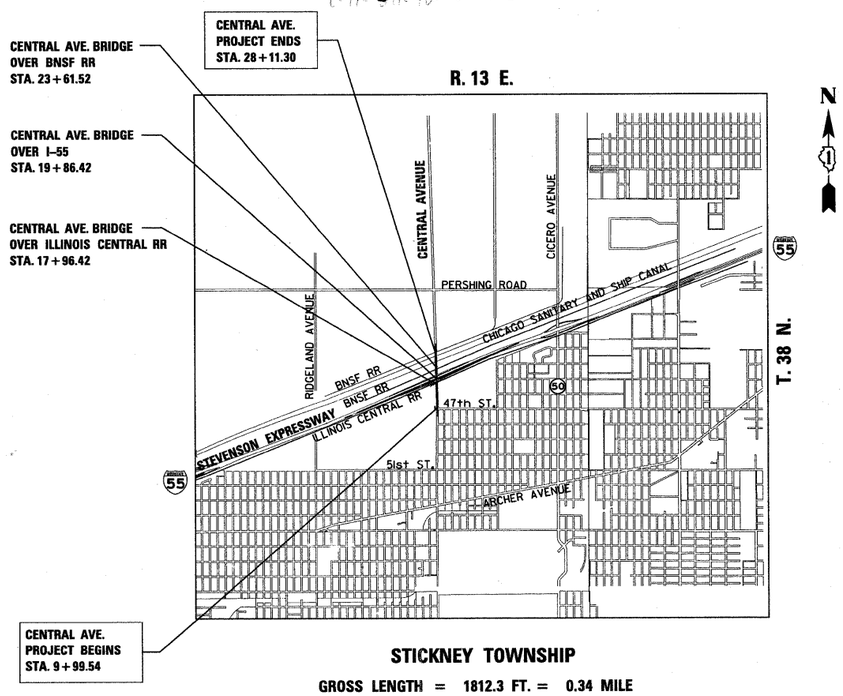

STICKNEY TOWNSHIP

GROSS LENGTH = 1812.3 FT. = 0.34 MILE
NET LENGTH = 1812.3 FT. = 0.34 MILE

D–91–328–00

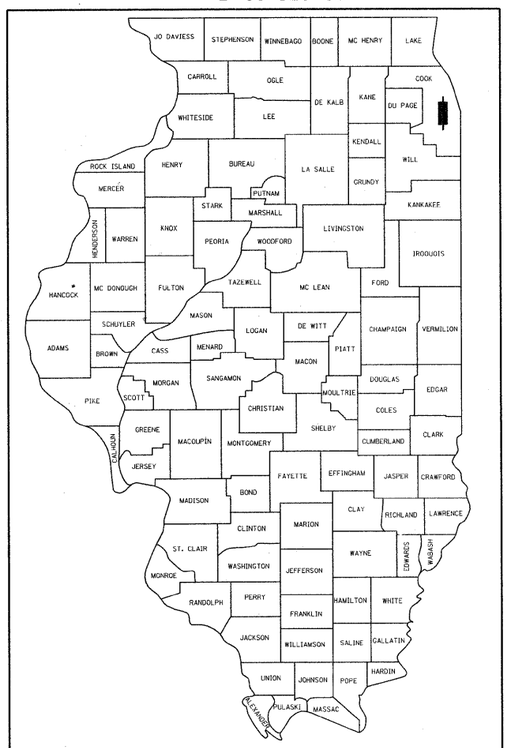

LOCATION OF SECTION INDICATED THUS:–

Signed Anna M. Dukes
Anna M. Dukes, S.E. Il. Lic. No. 081-005598
Expires 11-30-2010
Date 5/10/10

STATE OF ILLINOIS
ANNA M. DUKES
081-005598
CHICAGO, ILLINOIS
LICENSED STRUCTURAL ENGINEER

100′ 200′ 300′ — 1″= 100′
10′ 20′ 30′ — 1″= 10′
50′ 100′ — 1″= 50′
50′ 100′ — 1″= 40′
50′ 100′ — 1″= 30′
50′ 100′ — 1″= 20′

FULL SIZE PLANS HAVE BEEN PREPARED USING STANDARD ENGINEERING SCALES. REDUCED SIZED PLANS WILL NOT CONFORM TO STANDARD SCALES. IN MAKING MEASUREMENTS ON REDUCED PLANS, THE ABOVE SCALES MAY BE USED.

J.U.L.I.E.
JOINT UTILITY LOCATION INFORMATION FOR EXCAVATION
1–800–892–0123
OR 811

PROJECT MANAGER: R. SHAH 847-705-4555

CONTRACT NO. 60L39

STATE OF ILLINOIS
DEPARTMENT OF TRANSPORTATION
DIVISION OF HIGHWAYS

SUBMITTED MAY 12, 2010
Diane M. O'Keefe
DEPUTY DIRECTOR OF HIGHWAYS, REGION ENGINEER

August 13 2010
Scott E. Stitt P.E. /a
acting ENGINEER OF DESIGN AND ENVIRONMENT

August 13 2010
Christine M. Reed /a
DIRECTOR OF HIGHWAYS, CHIEF ENGINEER

PRINTED BY THE AUTHORITY OF THE STATE OF ILLINOIS

STATE OF ILLINOIS
DEPARTMENT OF TRANSPORTATION

Existing Structure: Structure No. 016-0724 built in 1964. Sec. 207-1011.1-C.F. Mainline: Structure, which carries Central Avenue over I-55. Four spans, consisting of a two span continuous flanked by two single spans with framing to ramps. Total length 325'-11 3/8", width 88'-10 7/8". Ramp 1: Five spans, consisting of a two span continuous and a three span continuous. Total Length 360'-2", width 48'-10 5/8". Ramp 2: Five spans, consisting of a two span continuous and a three span continuous. Total Length 360'-2 1/2", width 48'-10 5/8". Ramp 3: Four spans, consisting of a four span continuous. Total Length 276'-6 1/8", width 48'-10 5/8". Ramp 4: Five spans, consisting of a two span continuous and a three span continuous. Total Length 360'-2 1/2", width 48'-10 5/8". All existing structure consists of WF beams on concrete piers and abutments. Existing superstructure and substructure are to be repaired and reused.

Structure No. 016-3240 built in 1964. Sec. 046-0404.05-MFT. 33-Span Structure which carries Central Avenue over the Sanitary Drainage and Ship Canal, north of Interstate 55, and back to grade at 39th Street. Only five spans, are affected by the SPUI widening, consisting of a two span continuous and a three spans of a 5-span continuous. Sixteen (16) wide-flange steel stringers for the 3-span and fourteen (14) wide-flange steel stringers for the 2-span structure support a 7" thick (existing) reinforced concrete deck. Reinforced concrete abutments and piers support the stringers. Total length 1433'-8 3/4"., width 88'-10 7/8".

Structure Number 016-3241 built in 1964. Sec. 207-1011.1-C.F. South approach structure which carries Central Avenue from grade at 47th Street over the Illinois Central (IC) Railroad, south of Interstate 55. Six spans, consisting of a three span continuous and another three span continuous. Sixteen (16) wide-flange steel stringers support a 7" thick (original) reinforced concrete deck. Reinforced concrete abutments and piers support the stringers. Total length 458'-1", width 88'-10 7/8".

Bench Marks:

BM 51 N 1874340.015 E 1139725.531 EL. 630.251
Cut square on top of pier at NW corner of the Center Ave. and NW Ramp.
1.88 Feet NW from back of concrete parapet wall.

BM 60 N 1874267.729 E 1140141.340 EL. 621.124
Cut square on top of pier at N retaining wall of SE Ramp.
Approx. 1050 Feet E of Central Ave.

BM 64 N 1874131.115 E 1139419.816 EL. 622.030
Cut square on top of S concrete retaining wall of Nw Ramp.
Approx. 66' Feet E of ramp's abutment.

BM 65 N 1873896.493 E 1138873.997 El. 604.36
Cut square on top of N edge of S retaining wall of NW Ramp. Approx. 618 feet E of W end of wall.

LIST OF SHEETS

1 COVER
2 OVERALL GENERAL PLAN
3 OVERALL TOTAL BILL OF MATERIALS
4 OVERALL STAGE CONSTRUCTION

STATE OF ILLINOIS ANNA M. DUKES 081-005598 CHICAGO, ILLINOIS LICENSED STRUCTURAL ENGINEER

Signed Anna M. Dukes
Anna M. Dukes, S.E. Il. Lic. No. 081-005598
Expires 11-30-2010.
Date August 3, 2010

DESIGN SPECIFICATION

2002 AASHTO Standard Specifications for Highway Bridges

SEISMIC DATA

Seismic performance category (SPC) = A
Bedrock Acceleration Coefficient = 0.04
Site Coefficient = 1.50

LOADING HS20-44

Allow 50 psf for future wearing surface

DESIGN STRESSES

FIELD UNITS

Concrete: f'c = 3,500 psi
Struct. Steel: fy = 50,000 psi (M 270, GR 50)
Reinforcement: fy = 60,000 psi

ALLOWABLE STRESSES FOR EXISTING STEEL AND CONCRETE

Concrete: f'c = 3,500 psi
Struct. Steel: fy = 36,000 psi
Reinforcement: fy = 40,000 psi

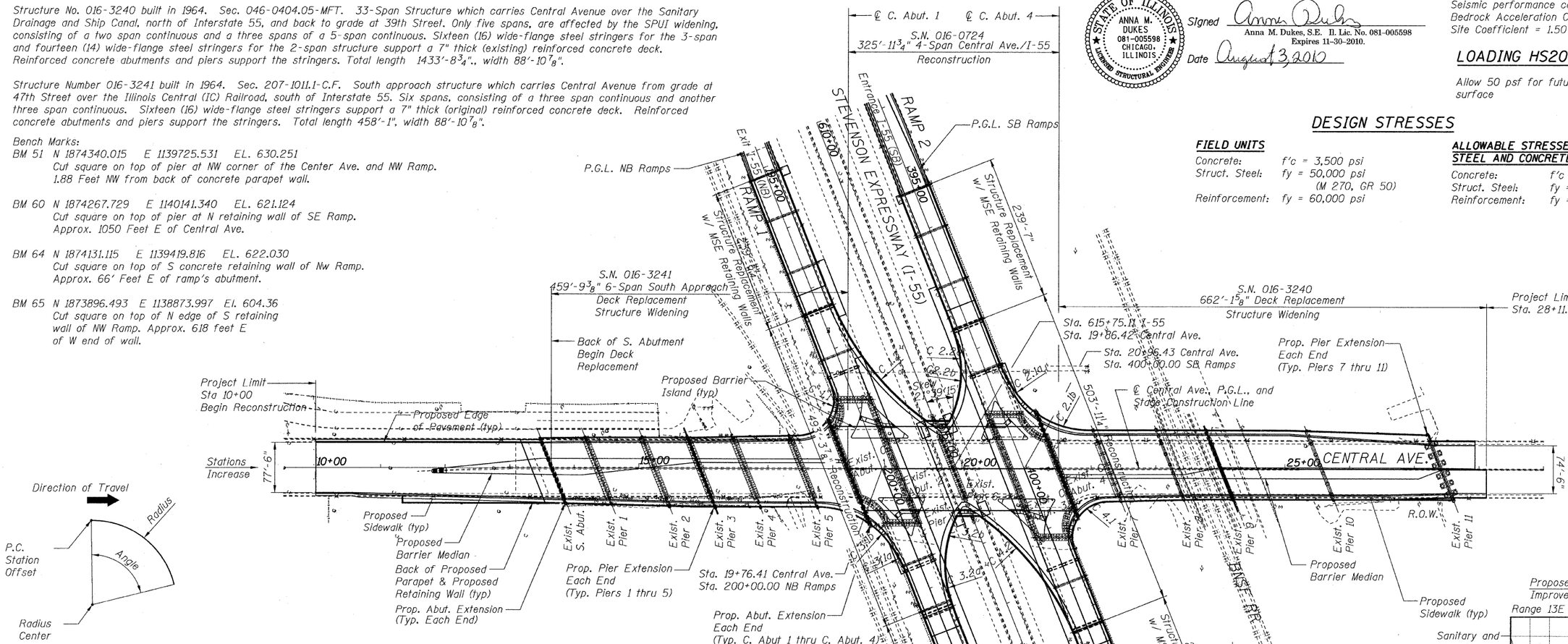

GENERAL PLAN

HORIZONTAL CURVE DATA

Ramp	Curve	Station	Offset	Radius	Angle
1	C 1.1	198+56.48	21.00' RT	60 ft	111°39'15.0"
	C 1.2	197+23.77	16.00' LT	440 ft	36°18'40.2"
2	C 2.1a	398+29.17	20.00' LT	260 ft	19°7'37.5"
	C 2.1b	21+91.24	52.00' LT	130 ft	44°32'5.3"
	C 2.2a	13+23.04	52.00' LT	260 ft	19°7'37.5"
	C 2.2b	398+32.23	30.35' RT	130 ft	44°32'5.3"
3	C 3.1a	201+02.49	30.55' RT	260 ft	19°7'37.5"
	C 3.1b	17+81.60	52.00' RT	130 ft	44°32'5.3"
	C 3.2a	201+67.77	30.35' LT	260 ft	19°7'37.5"
	C 3.2b	19+99.80	52.00' RT	130 ft	44°32'5.3"
4	C 4.1	401+43.52	21.00' LT	60 ft	111°39'15.0"
	C 4.2	402+76.23	16.00' RT	440 ft	36°18'40.2"

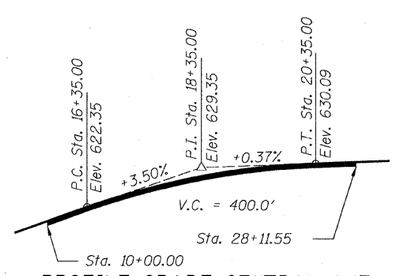

PROFILE GRADE CENTRAL AVE.

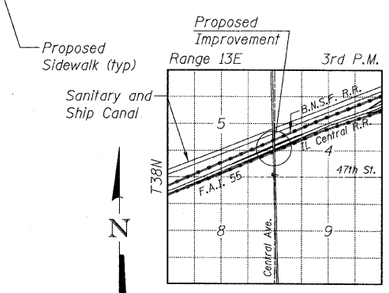

LOCATION SKETCH

OVERALL GENERAL PLAN
SN 016-0724, SN 016-3240,
& SN 016-3241

TYLIN INTERNATIONAL

		REVISIONS	
DESIGNED - JMA		NAME	DATE
CHECKED - AMD,			
DRAWN - JMA			
CHECKED - AMD,			
DATE - 08/02/10			

SHEET NO. 2
4 SHEETS

F.A.I RTE.	SECTION	COUNTY	TOTAL SHEETS	SHEET NO.
55	0711.2R & 1011.1BR	COOK	200	2
		CONTRACT NO. 60L39		
FED. ROAD DIST. NO. 1	ILLINOIS	FED. AID PROJECT		

8/2/2010

2:29:29 PM

p:\01345\beam and bearing fabrication\55gpe.dgn

STATE OF ILLINOIS
DEPARTMENT OF TRANSPORTATION

TOTAL BILL OF MATERIAL

IDOT CODE NO.	ITEM	UNIT	URBAN TOTAL	SFTY-2A 90% FED./10% STATE South Approach SN 016-3241	Central/I-55 SN 016-0724	North Approach SN 016-3240
50500205	FURNISHING STRUCTURAL STEEL	L SUM	1	0.08	0.81	0.11
X0327057	SHOP ASSEMBLY, RAMP 1	L SUM	1		1	
X0327058	SHOP ASSEMBLY, RAMP 2	L SUM	1		1	
X0327059	SHOP ASSEMBLY, RAMP 3	L SUM	1		1	
X0327060	SHOP ASSEMBLY, RAMP 4	L SUM	1		1	
X0326984	FURNISHING FINGER PLATE EXPANSION JOINT, 6"	FOOT	116			116
52100110	FURNISHING ELASTOMERIC BEARING ASSEMBLY, TYPE I	EACH	128	82		46
52100120	FURNISHING ELASTOMERIC BEARING ASSEMBLY, TYPE II	EACH	75	38		37
52100130	FURNISHING ELASTOMERIC BEARING ASSEMBLY, TYPE III	EACH	17			17
X0325957	FURNISHING MODULAR EXPANSION JOINT 6"	FOOT	99	99		
X0326985	FURNISHING MODULAR EXPANSION JOINT-SWIVEL 6"	FOOT	186		186	
X0327049	FURNISHING HIGH LOAD MULTI-ROTATIONAL BEARINGS, FIXED, 250K	EACH	20		20	
X0327050	FURNISHING HIGH LOAD MULTI-ROTATIONAL BEARINGS, FIXED, 500K	EACH	2		2	
X0327051	FURNISHING HIGH LOAD MULTI-ROTATIONAL BEARINGS, GUIDED EXPANSION, 150K	EACH	40		40	
X0325958	FURNISHING HIGH LOAD MULTI-ROTATIONAL BEARINGS, GUIDED EXPANSION, 250K	EACH	40		40	
X0327052	FURNISHING HIGH LOAD MULTI-ROTATIONAL BEARINGS, GUIDED EXPANSION, 350K	EACH	4		4	
X0327053	FURNISHING HIGH LOAD MULTI-ROTATIONAL BEARINGS, GUIDED EXPANSION, 900K	EACH	4		4	
X0327054	FURNISHING HIGH LOAD MULTI-ROTATIONAL BEARINGS, NON-GUIDED EXPANSION, 150K	EACH	34		34	
X0327055	FURNISHING HIGH LOAD MULTI-ROTATIONAL BEARINGS, NON-GUIDED EXPANSION, 800K	EACH	4		4	
X0327056	FURNISHING HIGH LOAD MULTI-ROTATIONAL BEARINGS, NON-GUIDED EXPANSION, 1500K	EACH	4		4	
X0320622	FIELD MEASUREMENTS	L SUM	1	0.33	0.34	0.33
50500455	STORAGE OF STRUCTURAL STEEL	CAL DA	180	60	60	60
52100300	STORAGE OF ELASTOMERIC BEARING ASSEMBLIES	CAL DA	120	60		60
X0325960	STORAGE OF HIGH LOAD MULTI-ROTATIONAL BEARINGS	CAL DA	60		60	
X0324146	STORAGE OF MODULAR EXPANSION JOINTS	CAL DA	120	60	60	
X0325065	STORAGE OF FINGER PLATE JOINTS	CAL DA	60			60

INDEX OF SHEETS

1	COVER SHEET
2	OVERALL GENERAL PLAN
3	OVERALL TOTAL BILL OF MATERIAL
4	OVERALL STAGE CONSTRUCTION
5 - 30	BRIDGE PLANS S.N. 016-3240
31 - 167	BRIDGE PLANS S.N. 016-0724
168 - 200	BRIDGE PLANS S.N. 016-3241

OVERALL BILL OF MATERIALS & INDEX OF SHEETS

TY·LIN INTERNATIONAL

DESIGNED -	REVISIONS	
CHECKED - AMD,	NAME	DATE
DRAWN - CBS		
CHECKED - AMD,		
DATE - 08/02/10		

SHEET NO. 3
4 SHEETS

F.A.I RTE.	SECTION	COUNTY	TOTAL SHEETS	SHEET NO.
55	~~0711.2R &~~ 1011.1BR ~~-I-1~~	COOK	200	3
		CONTRACT NO. 60L39		
FED. ROAD DIST. NO. 1	ILLINOIS	FED. AID PROJECT		

P:\01345\Beam and Bearing Fabrication\I55beam.dgn
8/11/2010 11:27:21 AM

STATE OF ILLINOIS
DEPARTMENT OF TRANSPORTATION

Stage I:
Construction of east half of the new SPUI. This includes the widening and rehabilitation of the northbound lanes of the Central Ave. Bridge (main line) and removal and reconstruction of Ramps 3 and 4. Central Ave. will remain open with one lane of traffic maintained in each direction, using southbound lanes. Ramps 1 and 2 will also remain open, and a left turn lane will be maintained along northbound Central Ave. for access to westbound I-55 (Ramp 2).

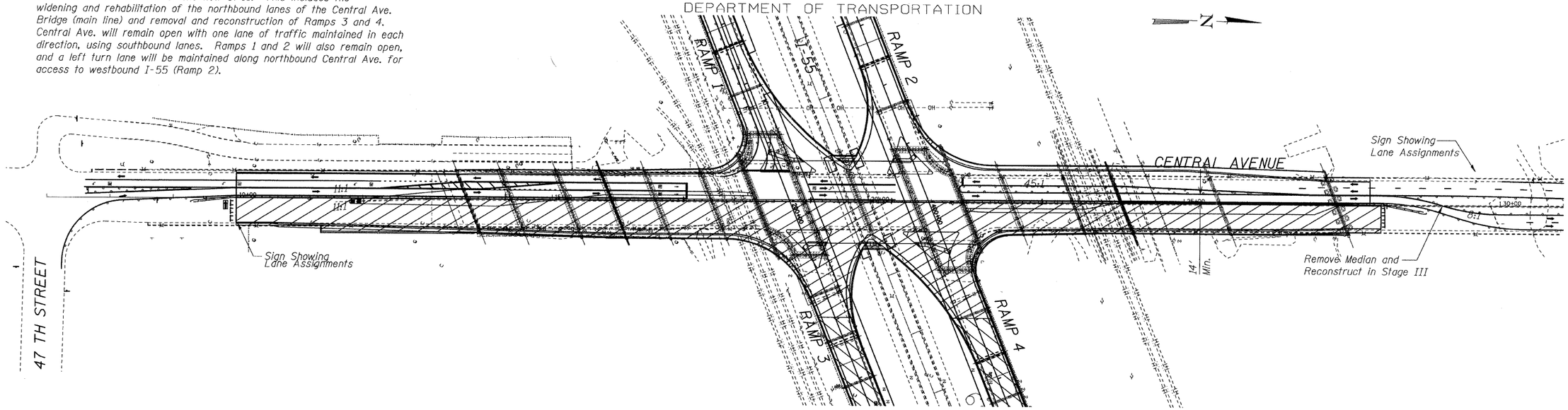

STAGE I

Stage II:
Construction of west half of the new SPUI. This includes the rehabilitation of the southbound lanes of Central Ave. Bridge (main line) and removal and reconstruction of Ramps 1 and 2. Central Ave. will remain open with one lane of traffic maintained in each direction, using the newly reconstructed southbound lanes. Ramps 3 and 4 will be open to traffic at the beginning of this stage, with Ramps 1 and 2 being closed at that time. At no time will all four of the interchange ramps be closed simultaneously. A left turn lane will be maintained along Central Ave. for access to the eastbound ramp (Ramp 3).

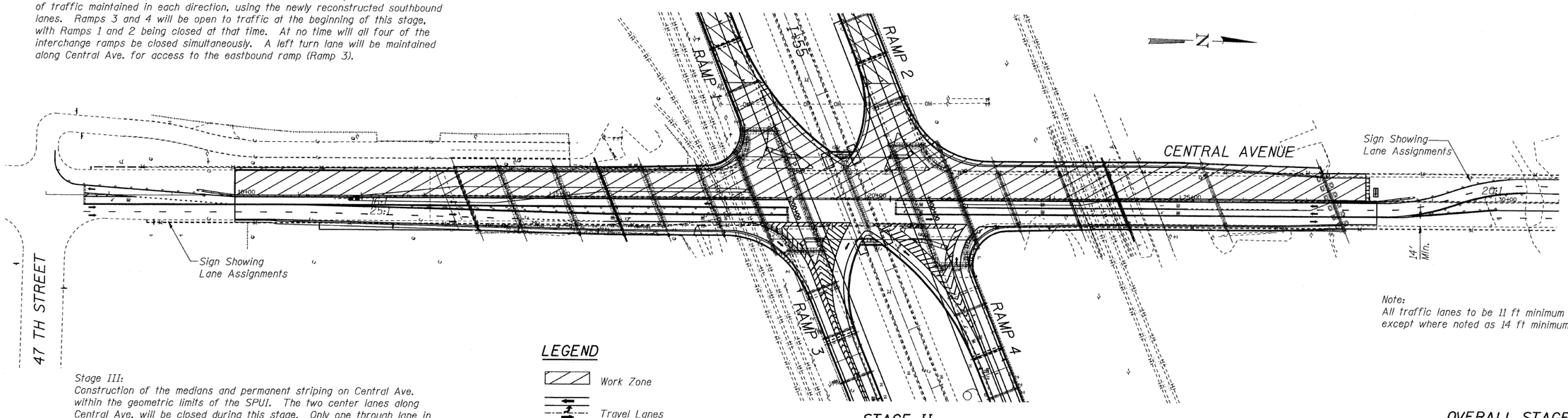

STAGE II

Note:
All traffic lanes to be 11 ft minimum width except where noted as 14 ft minimum.

Stage III:
Construction of the medians and permanent striping on Central Ave. within the geometric limits of the SPUI. The two center lanes along Central Ave. will be closed during this stage. Only one through lane in each direction will be available. Auxiliary left (one) lane and right turn lanes will be in place for Stage III operations; phasing will be adjusted on the reduced number of lanes available.

LEGEND

- Work Zone
- Travel Lanes
- Pavement Marking
- Barricades

OVERALL STAGE CONSTRUCTION
SN 016-0724, SN 016-3240 & SN 016-3241

TY·LIN INTERNATIONAL

DESIGNED	-	MI	
CHECKED	-	AMD,TD	
DRAWN	-	PL, CS	
CHECKED	-	AMD, MI, TD	
DATE	-	08/02/10	

REVISIONS	
NAME	DATE

SHEET NO. 4	F.A.I RTE.	SECTION	COUNTY	TOTAL SHEETS	SHEET NO.
4 SHEETS	55	0711.2R & 1011.1BR	COOK	200	4
			CONTRACT NO. 60L39		
	FED. ROAD DIST. NO. 1	ILLINOIS	FED. AID PROJECT		

2:40:24 PM
p:\01345\beam and bearing fabrication\i55constl.dgn
8/2/2010

STATE OF ILLINOIS
DEPARTMENT OF TRANSPORTATION

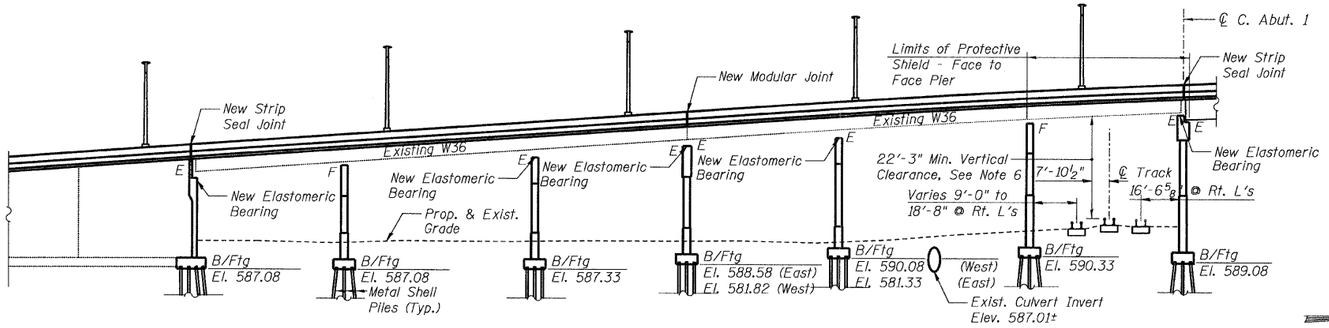

ELEVATION

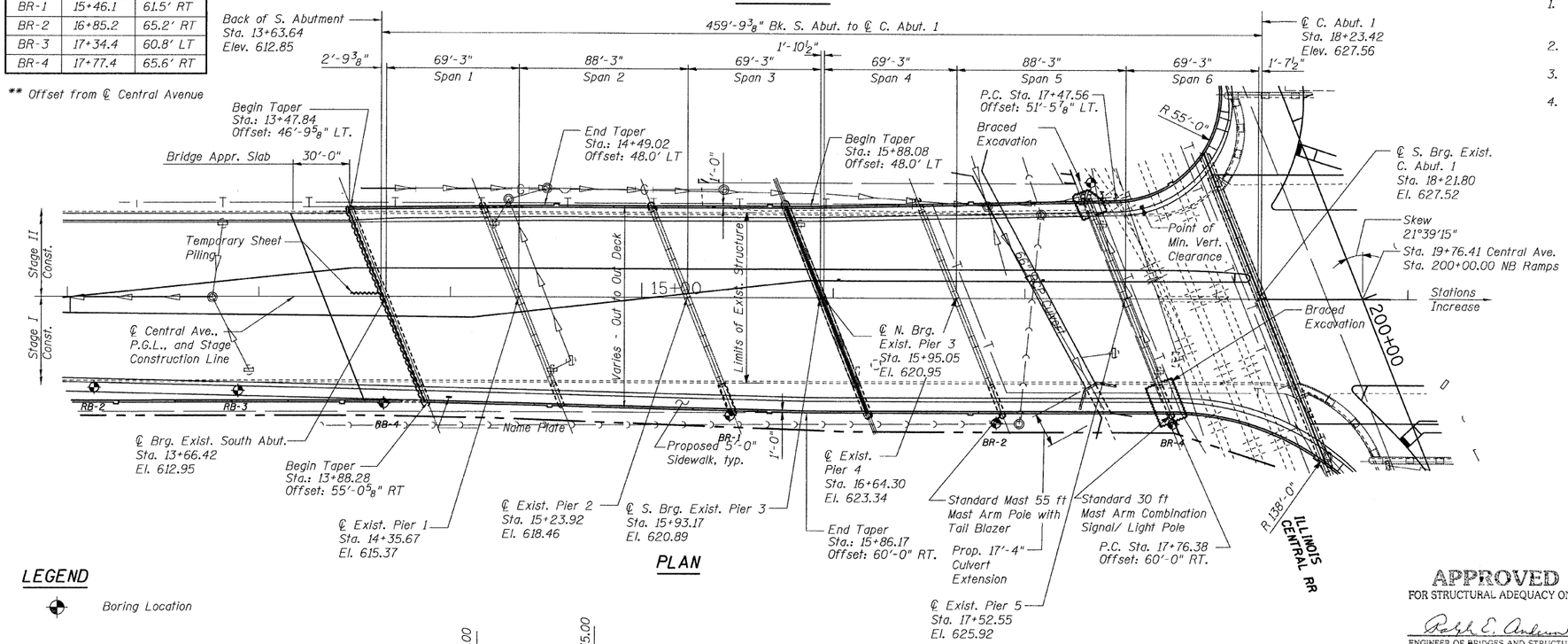

PLAN

BORING LOCATIONS

No.	Station	**Offset
RB-4	13+65.3	55.6' RT
BR-1	15+46.1	61.5' RT
BR-2	16+85.2	65.2' RT
BR-3	17+34.4	60.8' LT
BR-4	17+77.4	65.6' RT

** Offset from ℄ Central Avenue

LEGEND

Boring Location

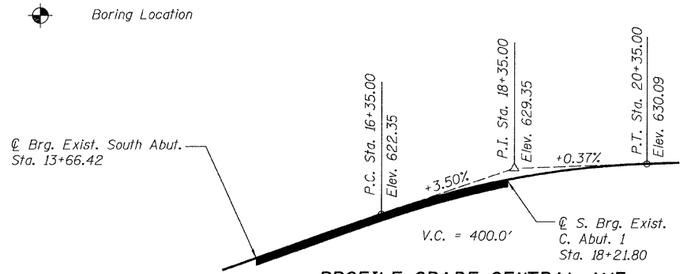

PROFILE GRADE CENTRAL AVE.

DESIGN SPECIFICATION

2002 AASHTO Standard Specifications for Highway Bridges

SEISMIC DATA

Seismic performance category (SPC) = A
Bedrock Acceleration Coefficient = 0.04
Site Coefficient = 1.50

LOADING HS20-44

Allow 50 psf for future wearing surface

DESIGN STRESSES

FIELD UNITS

Concrete: f'c = 3,500 psi
Struct. Steel: fy = 50,000 psi (M 270, GR 50)
Reinforcement: fy = 60,000 psi

ALLOWABLE STRESSES FOR EXISTING STEEL AND CONCRETE

Concrete: f'c = 3,500 psi
Struct. Steel: fy = 36,000 psi
Reinforcement: fy = 40,000 psi

NOTES:

1. No deck drains will be permitted in the span over tracks or within 10 ft of cross arms of a railroad pole line.
2. For C. Abutment 1 details, see plans for S.N. 016-0724
3. For culvert exstension details, see drainage plans.
4. Controlling Vertical Clearance governed by existing beams.

STATION 13+65.39
REBUILT 20__ BY
STATE OF ILLINOIS
FAP 366
FAI ROUTE 55
SEC. 0711.2R & 1011.1BR
LOADING HS20-44
STR. NO. 016-3241

NAME PLATE

(See Std. 515001)*

* The existing Name Plate shall be cleaned and relocated next to the new Name Plate. Cost is included with Name Plates.

APPROVED
FOR STRUCTURAL ADEQUACY ONLY
Ralph E. Anderson
ENGINEER OF BRIDGES AND STRUCTURES

SCOPE OF WORK

- Widen the existing Superstructure and Substructure.
- Remove and replace the Existing Deck with a 7½" Deck.
- Clean and Paint the Existing Structural Steel.
- Make existing structural steel composite.
- Remove and replace End Diaphragms located below deck expansion joints.
- Remove and replace South Abutment stem and backwall.
- Rebuild Pier 3 and C. Abutment 1.
- Construct new Pier & Abutment Extensions.
- Perform Formed Concrete Repairs on Piers.
- Replace Existing Rocker Expansion Bearings with Elastomeric Bearings.
- Install new deck Expansion Joints.
- Remove and replace the Drainage System.
- Extend the existing culvert.

STATE OF ILLINOIS ANNA M. DUKES 081-005598 CHICAGO, ILLINOIS LICENSED STRUCTURAL ENGINEER

Signed Anna M. Dukes
Anna M. Dukes, S.E. Il. Lic. No. 081-005598
Expires 11-30-2010.
Date August 3, 2010

GENERAL PLAN AND ELEVATION
STRUCTURE NO. 016-3241

TYLIN INTERNATIONAL

		REVISIONS	
DESIGNED	- SP	NAME	DATE
CHECKED	- AMD.		
DRAWN	- SP		
CHECKED	- AMD.		
DATE	- 08/02/10		

SHEET NO. 1	F.A.I RTE.	SECTION	COUNTY	TOTAL SHEETS	SHEET NO.
26 SHEETS	55	0711.2R & 1011.1BR	COOK	200	5
			CONTRACT NO. 60L39		
	FED. ROAD DIST. NO. 1	ILLINOIS	FED. AID PROJECT		

p:\01345\beam and bearing fabrication\55clape.dgn 2:29:31 PM 8/2/2010

STATE OF ILLINOIS
DEPARTMENT OF TRANSPORTATION

GENERAL NOTES

1. Fasteners shall be AASHTO M164 Type 1, mechanically galvanized bolts. Bolts $^{7}/_{8}$-in. ϕ, holes $^{15}/_{16}$-in. ϕ, unless otherwise noted.

2. Calculated weight of Structural Steel =
   Grade 50 = 400,850 lbs
   Grade 36 = 59,940 lbs

3. The Organic Zinc Rich Primer/Epoxy/Urethane paint system shall be used for painting of new structural steel except where otherwise noted. The entire system shall be shop applied, with the exception that the exterior surfaces and bottom of the bottom flange of the fascia beams, masked off connection surfaces, and field installed fasteners, all of which shall be touched up and finish coated in the field. The color of the final finish coat for all interior steel surfaces shall be gray, Munsell No. 5B 7/1. The color of the final finish coat for the exterior and bottom flange of the fascia beams shall be Reddish Brown, Munsell No. 2.5YR 3/4. See Special Provision for "Cleaning and Painting New Metal Structures".

4. Materials, fabrication welding, and non-destructive testing for the members identified as Fracture Critical Member and member components (FCM) in the contract plans shall conform to the requirements of Section 12 of the current ANSI / AASHTO / AWS / D 1.5 Bridge Welding Code

5. Plan dimensions and details relative to existing plans are subject to nominal construction variations. The Contractor shall field verify existing dimensions and details affecting new construction and make necessary approved adjustments prior to construction or ordering of materials. Such variations shall not be cause for additional compensation for a change in scope of the work, however, the Contractor will be paid for the quantity actually furnished at the unit price bid for the work.

INDEX OF SHEETS

1	GENERAL PLAN AND ELEVATION
2	GENERAL NOTES, INDEX OF SHEETS & BILL OF MATER.
3	STAGE I CONSTRUCTION
4	STAGE II CONSTRUCTION
5	STAGE III CONSTRUCTION
6	TOP OF SLAB ELEVATIONS - LAYOUT SPANS 1, 2 & 3
7	TOP OF SLAB ELEVATIONS - LAYOUT SPANS 4, 5 & 6
8	TOP OF SLAB ELEVATIONS 1 (New Beams only)
9	TOP OF SLAB ELEVATIONS 2 (New Beams Only)
10	SUPERSTRUCTURE CROSS SECTION - SPANS 1, 2 & 3
11	SUPERSTRUCTURE CROSS SECTION - SPANS 4, 5 & 6
12	MODULAR EXPANSION JOINT DETAILS AT PIER 3
13	FRAMING PLAN - SPANS 1, 2 & 3
14	FRAMING PLAN - SPANS 4, 5 & 6
15	MOMENT & REACTION TABLES
16	GIRDER ELEVATIONS SPANS 1, 2 & 3
17	GIRDER ELEVATIONS SPANS 4, 5 & 6
18	GIRDER ELEVATIONS FLARED GIRDERS
19	FRAMING DETAILS 1 DIAPHRAGMS
20	FRAMING DETAILS 2 CONNECTIONS - EAST
21	FRAMING DETAILS 3 CONNECTIONS - WEST
22	FRAMING DETAILS 4 FIELD SPLICES
23	ELASTOMERIC BEARINGS TYPE I
24	ELASTOMERIC BEARINGS TYPE II
25	STEEL EXTENSION DETAILS
26	COVER PLATE RETROFIT

TOTAL BILL OF MATERIAL

SOUTH APPROACH ITEM	UNIT	SUPER	SUB	TOTAL
FURNISHING STRUCTURAL STEEL	L SUM	0.08	-	0.08
FURNISHING ELASTOMERIC BEARING ASSEMBLY, TYPE I	EACH	82	-	82
FURNISHING ELASTOMERIC BEARING ASSEMBLY, TYPE II	EACH	38	-	38
FURNISHING MODULAR EXPANSION JOINT, 6"	FOOT	99	-	99
FIELD MEASUREMENTS	L SUM	0.33	-	0.33
STORAGE OF STRUCTURAL STEEL	CAL DA	60	-	60
STORAGE OF ELASTOMERIC BEARING ASSEMBLIES	CAL DA	60	-	60
STORAGE OF MODULAR EXPANSION JOINTS	CAL DA	60	-	60

GENERAL NOTES, INDEX OF SHEETS
& BILL OF MATERIAL
STRUCTURE NO. 016-3241

TY·LIN INTERNATIONAL

DESIGNED	SP
CHECKED	AMD,
DRAWN	JA
CHECKED	AMD,
DATE	08/02/10

REVISIONS	
NAME	DATE

SHEET NO. 2
26 SHEETS

F.A.I RTE.	SECTION	COUNTY	TOTAL SHEETS	SHEET NO.
55	0711.2R & 1011.1BR	COOK	200	6
		CONTRACT NO. 60L39		
FED. ROAD DIST. NO. 1	ILLINOIS	FED. AID PROJECT		

p:\01345\beam and bearing fabrication\55cigenot.dgn 8/2/2010 2:41:29 PM

55cigenot.dgn 8/2/2010 2:41:29 PM

STATE OF ILLINOIS
DEPARTMENT OF TRANSPORTATION

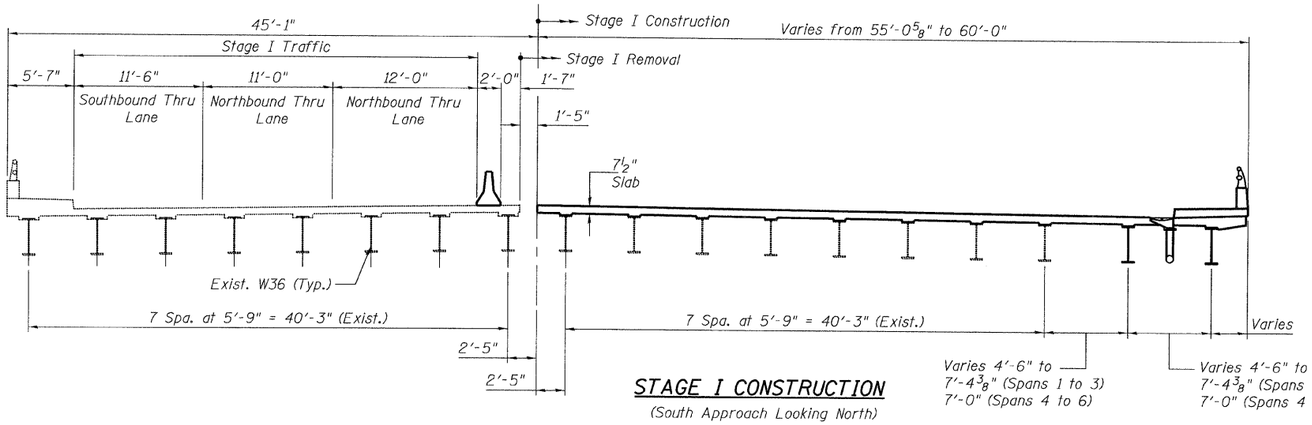

STAGE I CONSTRUCTION
(South Approach Looking North)

LEGEND

Stage I Removal

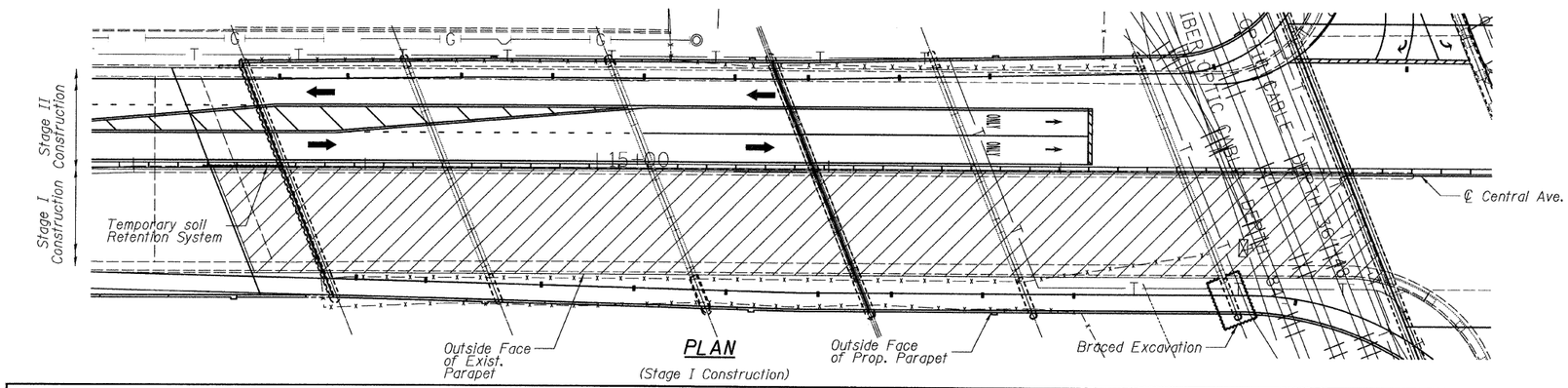

PLAN
(Stage I Construction)

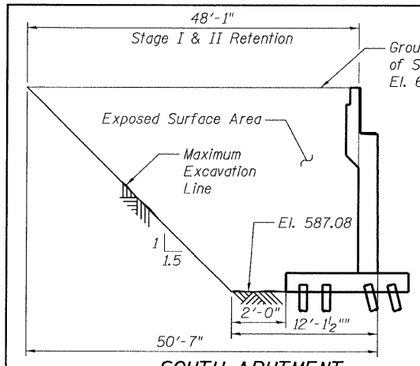

SOUTH ABUTMENT

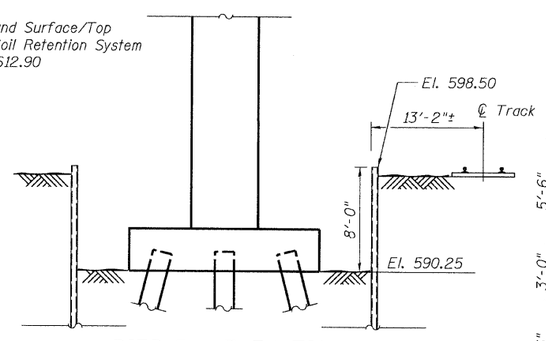

PIER 5 - ELEVATION
(Looking North)

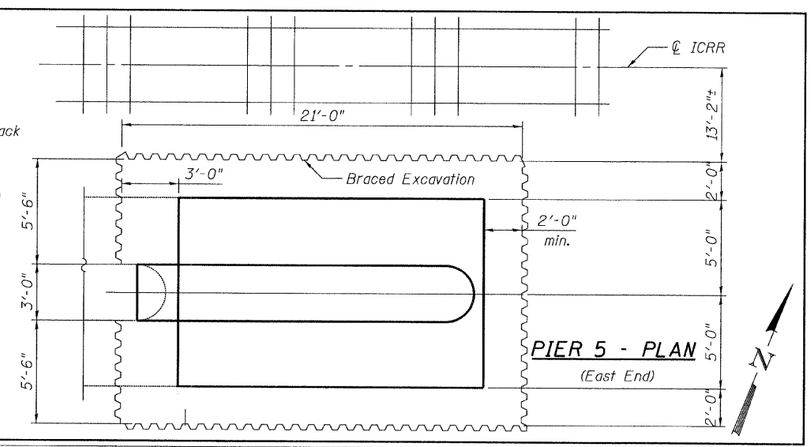

PIER 5 - PLAN
(East End)

STAGE I REMOVAL

1. Install temporary concrete barrier as shown and divert traffic to the existing Southbound bridge.
2. Install temporary soil retention system and braced excavation at locations shown.
3. Remove Stage I limits of the existing concrete deck.
4. Remove Stage I limits of substructure units as shown on sheet.
5. Remove existing structural steel diaphragms at existing expansion joints.

STAGE I CONSTRUCTION

1. Construct widened portions of piers 1, 2, 4 and 5.
2. Reconstruct and widen the South Abutment, Pier 3 & C. Abutment 1, within the limits of Stage I.
3. Replace existing expansion bearings.
4. Paint existing structural steel beams and diaphragms, within the limits of Stage I.
5. Erect new structural steel bems and diaphragms.
6. Construct new bridge deck.

NOTES:

1. A contilevered sheet piling design does not appear feasible and additional members or other retention systems may be necessary. The Contractor shall submit a temporary soil retention system design including plan details and calculations for review and acceptance by the Engineer.
2. The contractor shall coordinate the installation of the braced excavation piling with IC/CN Railroad.

THIS SHEET FOR INFORMATION ONLY

ITEM	UNIT	TOTAL
Temporary Soil Retention System	SQ FT	518
Braced Excavation	CU YD	87

STAGE I CONSTRUCTION
STRUCTURE NO. 016-3241

TY·LIN INTERNATIONAL

DESIGNED	PK
CHECKED	AMD,
DRAWN	EMK, PK
CHECKED	AMD,
DATE	08/02/10

REVISIONS	
NAME	DATE

SHEET NO. 3
26 SHEETS

F.A.I RTE.	SECTION	COUNTY	TOTAL SHEETS	SHEET NO.
55	0711.2R & 1011.1BR	COOK	200	7
		CONTRACT NO. 60L39		
FED. ROAD DIST. NO. 1	ILLINOIS	FED. AID PROJECT		

p:\01345\beam and bearing fabrication\55cistegel.dgn
8/2/2010 2:41:31 PM

STATE OF ILLINOIS
DEPARTMENT OF TRANSPORTATION

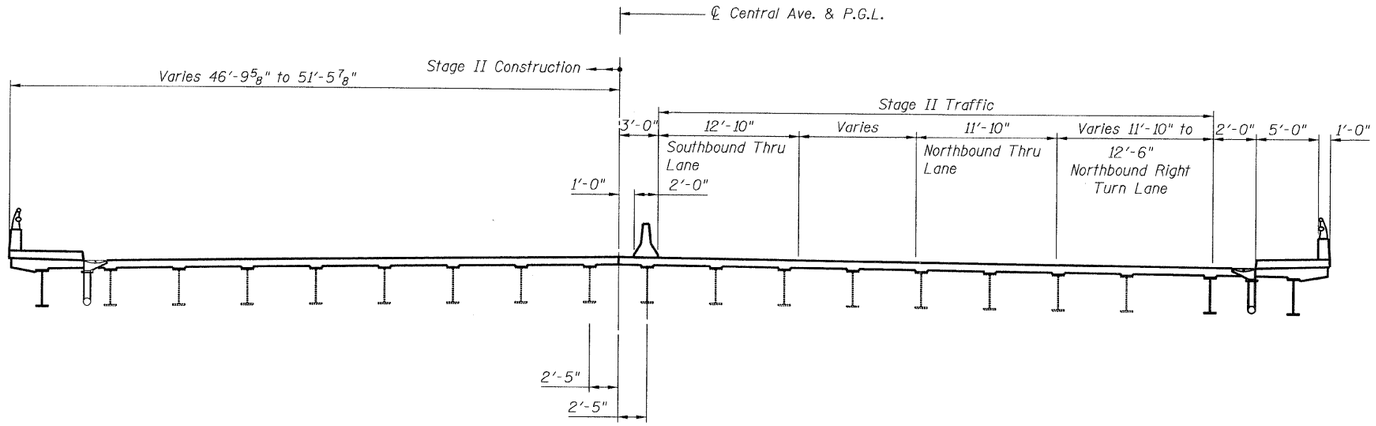

STAGE II CONSTRUCTION

(South Approach Looking North)

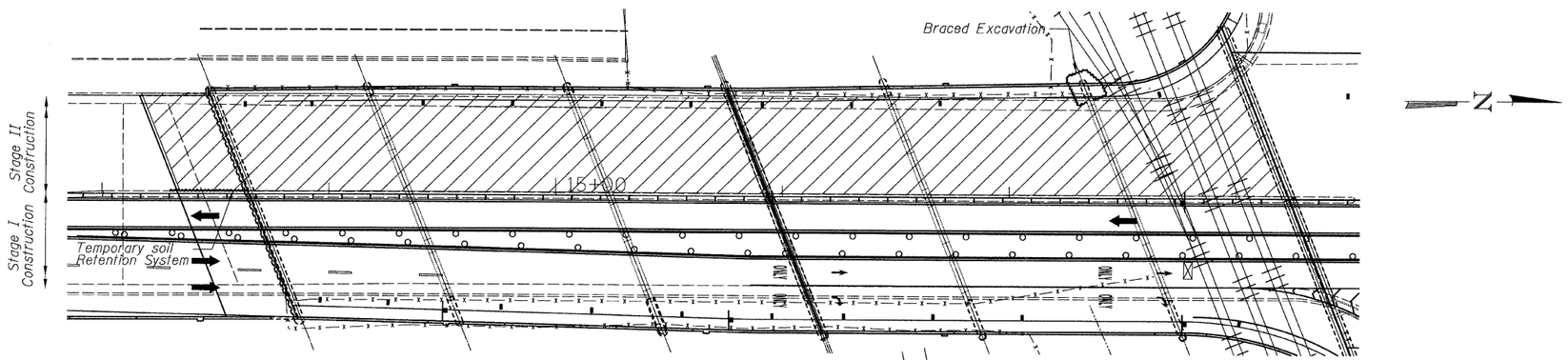

PLAN

(Stage II Construction)

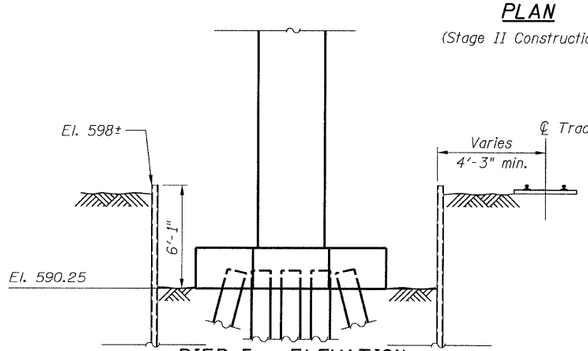

PIER 5 - ELEVATION

(Looking East)

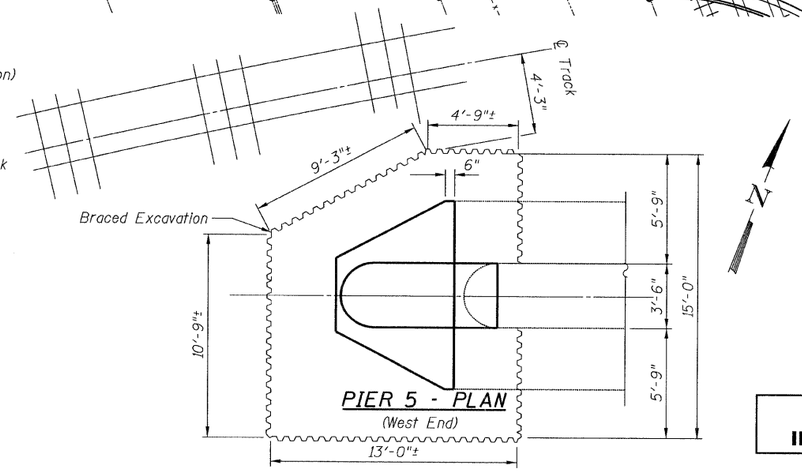

PIER 5 - PLAN

(West End)

THIS SHEET FOR INFORMATION ONLY

STAGE II REMOVAL

1. Install temporary concrete barrier as shown and divert traffic to the constructed portion of the new bridge.
2. Install braced excavation at west end of Pier 5 as shown.
3. Remove existing structural steel diaphragms at existing expansion joints.
4. Remove remainder of the South Abutment back wall and rounded edge. See Sheet 3.
5. Remove remainder of C. Abutment 1 above the crashwall.
6. Remove remainder of existing concrete deck.

STAGE II CONSTRUCTION

1. Construct widened portion of piers.
2. Reconstruct and widen the remainder of C. Abutment 1, Pier 3 and South Abutment.
3. Replace remaining existing expansion bearings.
4. Paint remainder of existing structural steel girders and diaphragms.
5. Erect new structural steel beams and diaphragms.
6. Construct remainder of new bridge deck.

NOTES:

1. See Stage I construction sheet for Temporary Soil Retention details.
2. The contractor shall coordinate the installation of the braced excavation piling with IC/CN Railroad.

LEGEND

Stage II Removal

ITEM	UNIT	TOTAL
Braced Excavation	CU YD	40

STAGE II CONSTRUCTION
STRUCTURE NO. 016-3241

TY·LIN INTERNATIONAL

DESIGNED	PK
CHECKED	AMD.
DRAWN	EMK, PK
CHECKED	AMD.
DATE	08/02/10

REVISIONS	
NAME	DATE

SHEET NO. 4
26 SHEETS

F.A.I RTE.	SECTION	COUNTY	TOTAL SHEETS	SHEET NO.
55	0711.2R & 1011.1BR	COOK	200	8
		CONTRACT NO. 60L39		
FED. ROAD DIST. NO. 1	ILLINOIS	FED. AID PROJECT		

p:\01345\beam and bearing fabrication\55cistage2.dgn 2:41:32 PM

8/2/2010

STATE OF ILLINOIS
DEPARTMENT OF TRANSPORTATION

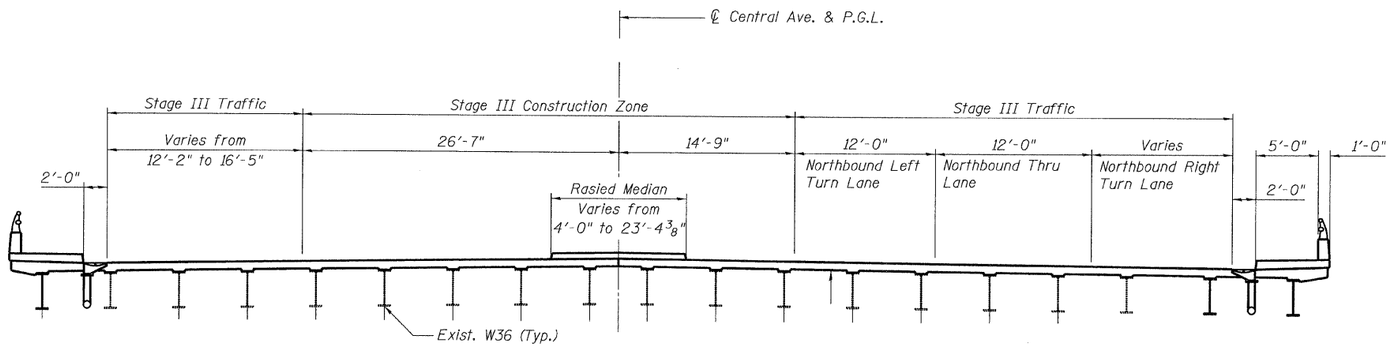

STAGE III CONSTRUCTION
(South Approach Looking North)

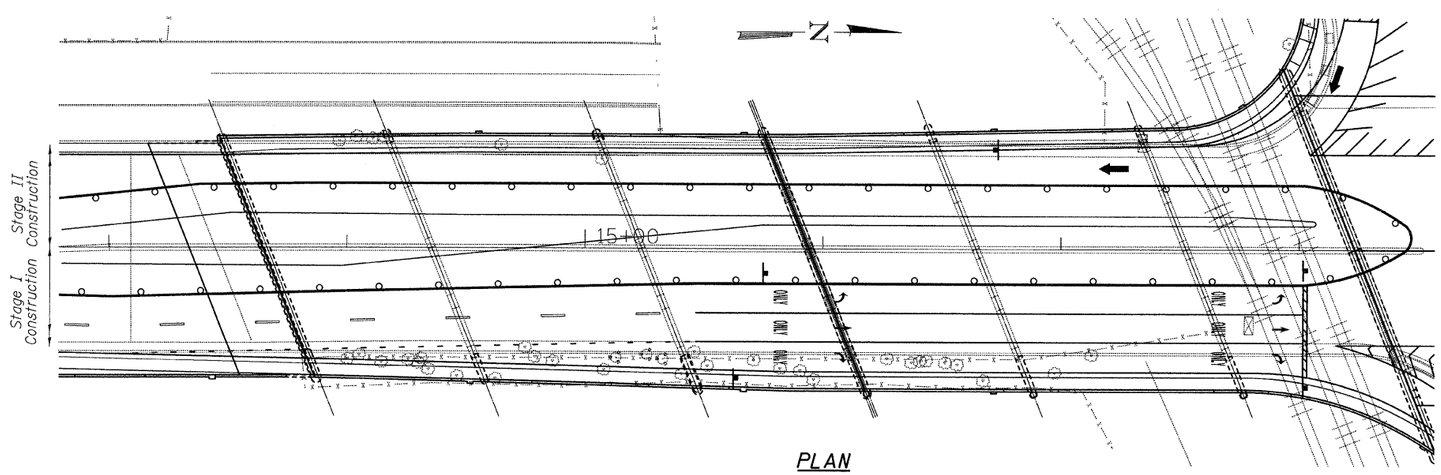

PLAN
(Stage III Construction)

STAGE III CONSTRUCTION

1. Construct new Raised Concrete Median.
2. Complete installation of expansion joints at South Abutment and Pier 3 over the Median.

THIS SHEET FOR INFORMATION ONLY

STAGE III CONSTRUCTION
STRUCTURE NO. 016-3241

TY·LIN INTERNATIONAL

DESIGNED	- PK	REVISIONS	
CHECKED	- AMD,	NAME	DATE
DRAWN	- EMK, PK		
CHECKED	- AMD,		
DATE	- 08/02/10		

SHEET NO. 5
26 SHEETS

F.A.I RTE.	SECTION	COUNTY	TOTAL SHEETS	SHEET NO.
55	0711.2R & 1011.1BR	COOK	200	9
		CONTRACT NO. 60L39		
FED. ROAD DIST. NO. 1	ILLINOIS	FED. AID PROJECT		

2:41:34 PM
p:\01345\beam end bearing fabrication\155c1stage3.dgn
8/2/2010

STATE OF ILLINOIS
DEPARTMENT OF TRANSPORTATION

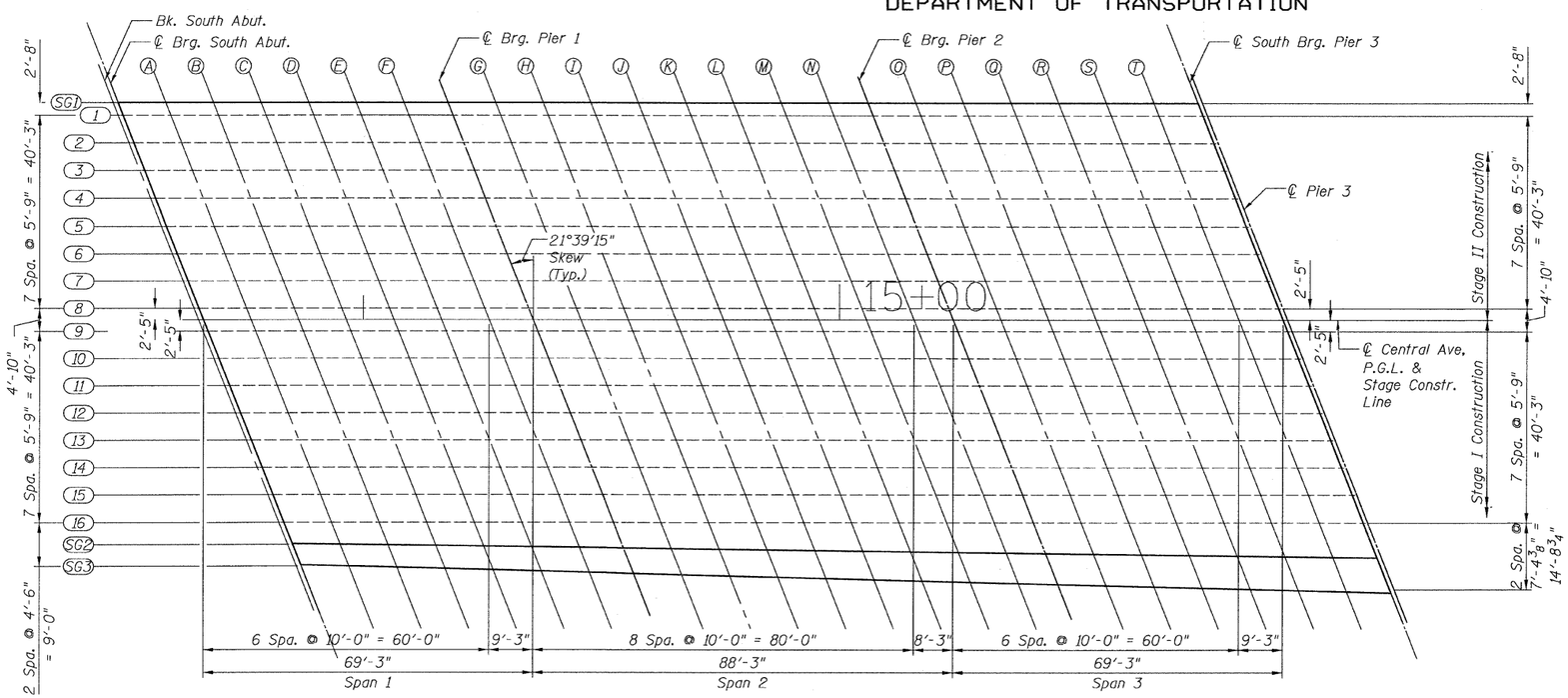

PLAN
(Spans 1, 2 & 3)

P.G.L.-SPANS 1, 2 & 3

LOCATION	STATION	OFFSET	THEORETICAL GRADE ELEVATIONS	THEORETICAL GRADE ELEVATIONS ADJUSTED FOR DEAD LOAD DEFLECTIONS
Bk. S. Abut.	013+65.25	0.00	612.91	612.91
℄ Brg. S. Abut.	013+66.42	0.00	612.95	612.95
A	013+76.42	0.00	613.30	613.32
B	013+86.42	0.00	613.65	613.68
C	013+96.42	0.00	614.00	614.03
D	014+06.42	0.00	614.35	614.37
E	014+16.42	0.00	614.70	614.71
F	014+26.42	0.00	615.05	615.05
℄ Brg. Pier 1	014+35.67	0.00	615.37	615.37
G	014+45.67	0.00	615.72	615.74
H	014+55.67	0.00	616.07	616.09
I	014+65.67	0.00	616.42	616.46
J	014+75.67	0.00	616.77	616.81
K	014+85.67	0.00	617.12	617.16
L	014+95.67	0.00	617.47	617.50
M	015+05.67	0.00	617.82	617.84
N	015+15.67	0.00	618.17	618.18
℄ Brg. Pier 2	015+23.92	0.00	618.46	618.46
O	015+33.92	0.00	618.81	618.82
P	015+43.92	0.00	619.16	619.18
Q	015+53.92	0.00	619.51	619.54
R	015+63.92	0.00	619.86	619.89
S	015+73.92	0.00	620.21	620.24
T	015+83.92	0.00	620.56	620.58
℄ S. Brg. Pier 3	015+93.17	0.00	620.89	620.89
℄ Pier 3	015+94.11	0.00	620.92	620.92

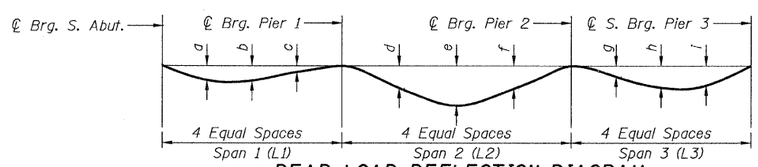

DEAD LOAD DEFLECTION DIAGRAM
(includes weight of concrete only)

Note: The above deflections are not to be used in the field if the engineer is working from the grade elevations adjusted for dead load deflections as shown above.

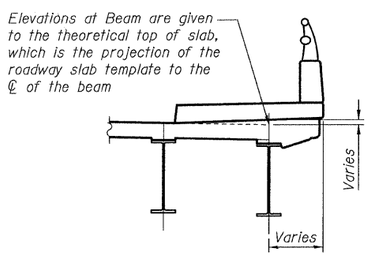

SECTION THRU PARAPET

Girder	a	b	c	d	e	f	g	h	i	L1	L2	L3
SG1	1/4"	3/8"	1/8"	1/4"	1/2"	1/4"	1/8"	3/8"	1/4"	69'-3"	88'-3"	69'-3"
1-16	1/4"	3/8"	1/2"	1/4"	1/2"	1/4"	1/8"	3/8"	1/4"	69'-3"	88'-3"	69'-3"
SG2	1/4"	1/4"	1/8"	3/8"	5/8"	3/8"	1/4"	3/8"	3/8"	69'-7 1/4"	88'-8 3/8"	69'-7 1/4"
SG3	1/4"	3/8"	1/8"	3/8"	5/8"	3/8"	1/8"	3/8"	1/4"	69'-11 5/8"	89'-2"	69'-11 5/8"

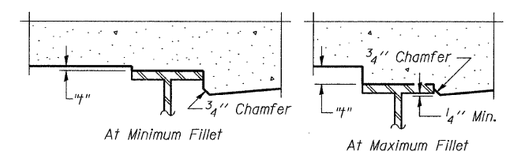

To determine "t": After all structural steel has been erected, elevations of the top flanges of the beams shall be taken at intervals shown here in. These elevations subtracted from the "Theoretical Grade Elevations Adjusted for Dead Load Deflection", minus slab thickness, equals the fillet heights "t" above top flange of beams.

FILLET HEIGHTS

TOP OF SLAB ELEVATIONS
LAYOUT SPANS 1, 2 & 3
STRUCTURE NO. 016-3241

TYLIN INTERNATIONAL

DESIGNED	-	SP, EKH	
CHECKED	-	AMD,	
DRAWN	-	SP, EKH	
CHECKED	-	AMD,	
DATE	-	08/02/10	

REVISIONS	
NAME	DATE

SHEET NO. 6
26 SHEETS

F.A.I RTE.	SECTION	COUNTY	TOTAL SHEETS	SHEET NO.
55	0711.2R & 1011.1BR	COOK	200	10
		CONTRACT NO. 60L39		
FED. ROAD DIST. NO. 1	ILLINOIS	FED. AID PROJECT		

4:29:14 PM
8/13/2010
e:\01345\beam and bearing fabrication\55ctsel.dgn

STATE OF ILLINOIS
DEPARTMENT OF TRANSPORTATION

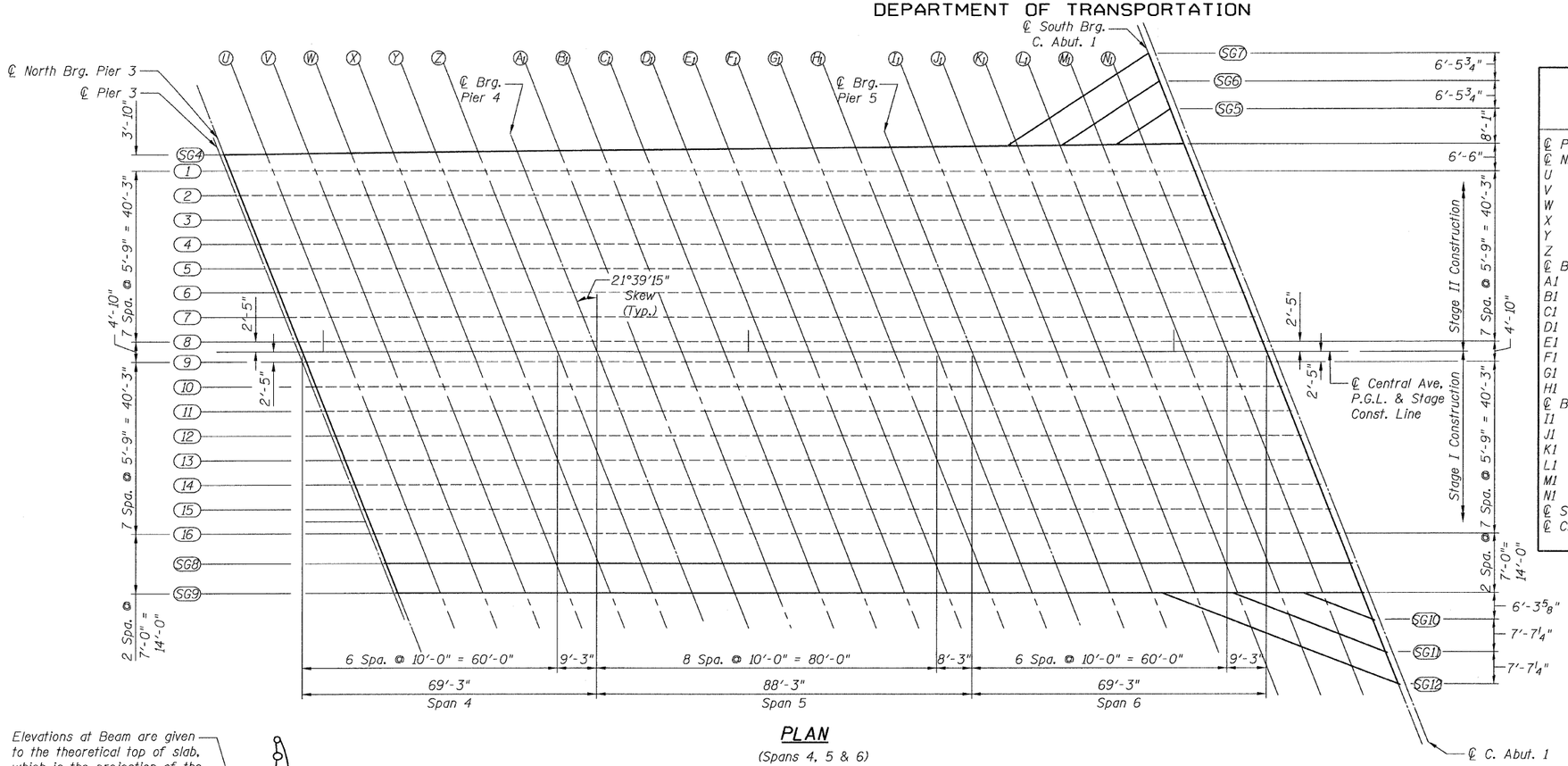

PLAN

(Spans 4, 5 & 6)

P.G.L.-SPANS 4, 5 & 6

LOCATION	STATION	OFFSET	THEORETICAL GRADE ELEVATIONS	THEORETICAL GRADE ELEVATIONS ADJUSTED FOR DEAD LOAD DEFLECTIONS
℄ Pier 3	015+94.11	0.00	620.92	620.92
℄ N. Brg. Pier 3	015+95.05	0.00	620.95	620.95
U	016+05.05	0.00	621.30	621.32
V	016+15.05	0.00	621.65	621.68
W	016+25.05	0.00	622.00	622.03
X	016+35.05	0.00	622.35	622.37
Y	016+45.05	0.00	622.70	622.71
Z	016+55.05	0.00	623.04	623.04
℄ Brg. Pier 4	016+64.30	0.00	623.34	623.34
A1	016+74.30	0.00	623.67	623.68
B1	016+84.30	0.00	623.98	624.00
C1	016+94.30	0.00	624.29	624.32
D1	017+04.30	0.00	624.59	624.63
E1	017+14.30	0.00	624.88	624.92
F1	017+24.30	0.00	625.16	625.19
G1	017+34.30	0.00	625.44	625.46
H1	017+44.30	0.00	625.71	625.71
℄ Brg. Pier 5	017+52.55	0.00	625.92	625.92
I1	017+62.55	0.00	626.18	626.18
J1	017+72.55	0.00	626.42	626.44
K1	017+82.55	0.00	626.66	626.69
L1	017+92.55	0.00	626.89	626.92
M1	018+02.55	0.00	627.12	627.14
N1	018+12.55	0.00	627.33	627.34
℄ S. Brg. C. Abut. 1	018+21.80	0.00	627.52	627.52
℄ C. Abut. 1	018+23.42	0.00	627.56	627.56

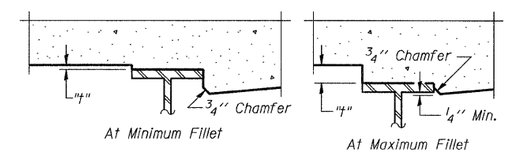

To determine "t": After all structural steel has been erected, elevations of the top flanges of the beams shall be taken at intervals shown here in. These elevations subtracted from the "Theoretical Grade Elevations Adjusted for Dead Load Deflection", minus slab thickness, equals the fillet heights "t" above top flange of beams.

FILLET HEIGHTS

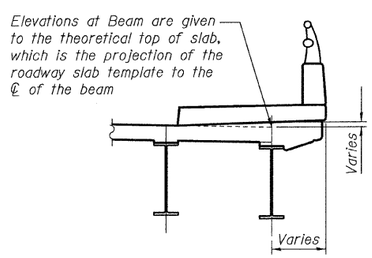

SECTION THRU PARAPET

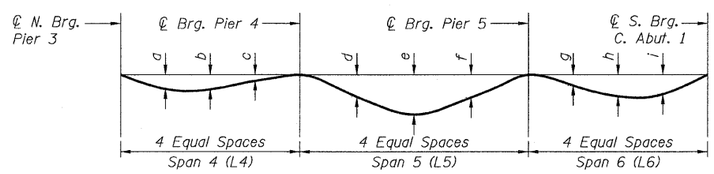

DEAD LOAD DEFLECTION DIAGRAM

(includes weight of concrete only)

Note: The above deflections are not to be used in the field if the engineer is working from the grade elevations adjusted for dead load deflections as shown above.

Girder	a	b	c	d	e	f	g	h	i	L4	L5	L6
SG4	1/4"	3/8"	1/8"	1/8"	1/4"	1/8"	1/2"	7/8"	3/4"	68'-11 1/8"	87'-10 1/8"	68'-11 1/8"
1	1/4"	3/8"	1/8"	1/4"	3/8"	1/4"	1/4"	5/8"	1/2"	69'-3"	88'-3"	69'-3"
2-16	1/4"	3/8"	1/8"	1/4"	1/2"	1/4"	1/8"	3/8"	1/4"	69'-3"	88'-3"	69'-3"
SG8	1/4"	3/8"	1/4"	1/4"	1/2"	1/4"	3/8"	5/8"	1/2"	69'-3"	88'-3"	69'-3"
SG9	3/8"	3/8"	1/4"	1/8"	1/4"	1/8"	5/8"	1 1/8"	3/4"	69'-3"	88'-3"	69'-3"

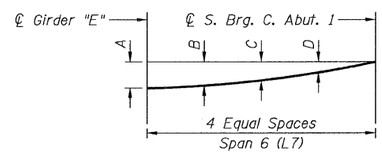

DEAD LOAD DEFLECTION DIAGRAM (GIRDERS SG5 THRU SG7 AND SG10 THRU SG12)

(includes weight of concrete only)

Note: The above deflections are not to be used in the field if the engineer is working from the grade elevations adjusted for dead load deflections as shown above.

Girder	A	B	C	D	E	L7
SG5	5/8"	1/2"	3/8"	1/4"	SG4	15'-2 1/8"
SG6	7/8"	5/8"	3/8"	1/8"	SG4	27'-4 1/4"
SG7	3/4"	5/8"	3/8"	1/4"	SG4	39'-6 1/4"
SG10	1/2"	3/8"	1/4"	1/8"	SG9	17'-5 5/8"
SG11	1 1/8"	7/8"	3/4"	3/8"	SG9	38'-6 3/8"
SG12	7/8"	1"	7/8"	1/2"	SG9	59'-7 1/8"

TOP OF SLAB ELEVATIONS LAYOUT SPANS 4, 5 & 6 STRUCTURE NO. 016-3241

T·Y·LIN INTERNATIONAL

DESIGNED	SP, EKH
CHECKED	AMD,
DRAWN	SP, EKH
CHECKED	AMD,
DATE	08/02/10

REVISIONS	
NAME	DATE

SHEET NO. 7
26 SHEETS

F.A.I RTE.	SECTION	COUNTY	TOTAL SHEETS	SHEET NO.
55	0711.2R & 1011.1BR	COOK	200	11
		CONTRACT NO. 60L39		
FED. ROAD DIST. NO. 1	ILLINOIS	FED. AID PROJECT		

8/13/2010

4:29:15 PM

c:\01345\beam and bearing fabrication\55c1tse2.dgn

\\tyl55c1tse2.dgn 8/13/2010 4:29:15 PM

STATE OF ILLINOIS
DEPARTMENT OF TRANSPORTATION

GIRDER SG1

LOCATION	STATION	OFFSET	THEORETICAL GRADE ELEVATIONS	THEORETICAL GRADE ELEVATIONS ADJUSTED FOR DEAD LOAD DEFLECTIONS
Bk. S. Abut.	013+45.64	-45.33	611.45	611.45
℄ Brg. S. Abut.	013+48.42	-45.33	611.55	611.55
A	013+58.42	-45.33	611.90	611.91
B	013+68.42	-45.33	612.25	612.27
C	013+78.42	-45.33	612.60	612.63
D	013+88.42	-45.33	612.95	612.97
E	013+98.42	-45.33	613.30	613.31
F	014+08.42	-45.33	613.65	613.65
℄ Brg. Pier 1	014+17.67	-45.33	613.97	613.97
G	014+27.67	-45.33	614.32	614.34
H	014+37.67	-45.33	614.67	614.69
I	014+47.67	-45.33	615.02	615.06
J	014+57.67	-45.33	615.37	615.41
K	014+67.67	-45.33	615.72	615.76
L	014+77.67	-45.33	616.07	616.10
M	014+87.67	-45.33	616.42	616.44
N	014+97.67	-45.33	616.77	616.78
℄ Brg. Pier 2	015+05.92	-45.33	617.06	617.06
O	015+15.92	-45.33	617.41	617.41
P	015+25.92	-45.33	617.76	617.77
Q	015+35.92	-45.33	618.11	618.13
R	015+45.92	-45.33	618.46	618.49
S	015+55.92	-45.33	618.81	618.83
T	015+65.92	-45.33	619.16	619.17
℄ S. Brg. Pier 3	015+75.17	-45.33	619.48	619.48
℄ Pier 3	015+76.11	-45.33	619.52	619.52

GIRDER SG2

LOCATION	STATION	OFFSET	THEORETICAL GRADE ELEVATIONS	THEORETICAL GRADE ELEVATIONS ADJUSTED FOR DEAD LOAD DEFLECTIONS
Bk. S. Abut.	013+82.36	47.15	612.70	612.70
℄ Brg. S. Abut.	013+85.15	47.17	612.80	612.80
A	013+95.20	47.29	613.15	613.16
B	014+05.25	47.42	613.50	613.52
C	014+15.30	47.55	613.84	613.87
D	014+25.35	47.67	614.19	614.21
E	014+35.40	47.80	614.54	614.55
F	014+45.45	47.92	614.89	614.89
℄ Brg. Pier 1	014+54.74	48.04	615.22	615.22
G	014+64.79	48.17	615.56	615.59
H	014+74.84	48.29	615.91	615.94
I	014+84.89	48.42	616.26	616.30
J	014+94.94	48.55	616.61	616.66
K	015+04.99	48.67	616.96	617.01
L	015+15.04	48.80	617.31	617.35
M	015+25.09	48.93	617.66	617.68
N	015+35.14	49.05	618.01	618.01
℄ Brg. Pier 2	015+43.44	49.16	618.30	618.30
O	015+53.49	49.28	618.65	618.65
P	015+63.54	49.41	619.00	619.02
Q	015+73.59	49.54	619.34	619.38
R	015+83.64	49.66	619.69	619.73
S	015+93.69	49.79	620.04	620.07
T	016+03.74	49.91	620.39	620.41
℄ S. Brg. Pier 3	016+13.03	50.03	620.72	620.72
℄ Pier 3	016+13.98	50.04	620.75	620.75

GIRDER SG3

LOCATION	STATION	OFFSET	THEORETICAL GRADE ELEVATIONS	THEORETICAL GRADE ELEVATIONS ADJUSTED FOR DEAD LOAD DEFLECTIONS
Bk. S. Abut.	013+84.14	51.64	612.67	612.67
℄ Brg. S. Abut.	013+86.93	51.67	612.77	612.77
A	013+97.03	51.92	613.12	613.13
B	014+07.13	52.17	613.47	613.49
C	014+17.23	52.43	613.81	613.84
D	014+27.33	52.68	614.16	614.19
E	014+37.43	52.93	614.51	614.53
F	014+47.53	53.18	614.86	614.86
℄ Brg. Pier 1	014+56.88	53.42	615.18	615.18
G	014+66.98	53.67	615.53	615.56
H	014+77.08	53.92	615.88	615.91
I	014+87.18	54.18	616.23	616.27
J	014+97.28	54.43	616.58	616.63
K	015+07.38	54.68	616.92	616.97
L	015+17.48	54.93	617.27	617.31
M	015+27.58	55.19	617.62	617.64
N	015+37.68	55.44	617.97	617.98
℄ Brg. Pier 2	015+46.01	55.65	618.26	618.26
O	015+56.11	55.90	618.61	618.61
P	015+66.21	56.15	618.95	618.97
Q	015+76.31	56.40	619.30	619.33
R	015+86.41	56.66	619.65	619.68
S	015+96.51	56.91	620.00	620.03
T	016+06.61	57.16	620.35	620.36
℄ S. Brg. Pier 3	016+15.96	57.39	620.67	620.67
℄ Pier 3	016+16.91	57.42	620.70	620.70

TOP OF SLAB ELEVATIONS 1
STRUCTURE NO. 016-3241

TYLIN INTERNATIONAL

DESIGNED -	SP, EKH
CHECKED -	AMD,
DRAWN -	SP, EKH
CHECKED -	AMD,
DATE -	08/02/10

REVISIONS	
NAME	DATE

SHEET NO. 8
26 SHEETS

F.A.I RTE.	SECTION	COUNTY	TOTAL SHEETS	SHEET NO.
55	0711.2R & 1011.1BR	COOK	200	12
		CONTRACT NO. 60L39		
FED. ROAD DIST. NO. 1	ILLINOIS	FED. AID PROJECT		

p:\01345\beam and bearing fabrication\55cltsedatal.dgn 4:29:16 PM 8/13/2010

STATE OF ILLINOIS
DEPARTMENT OF TRANSPORTATION

GIRDER SG1

LOCATION	STATION	OFFSET	THEORETICAL GRADE ELEVATIONS	THEORETICAL GRADE ELEVATIONS ADJUSTED FOR DEAD LOAD DEFLECTIONS
Bk. S. Abut.	013+45.64	-45.33	611.45	611.45
℄ Brg. S. Abut.	013+48.42	-45.33	611.55	611.55
A	013+58.42	-45.33	611.90	611.91
B	013+68.42	-45.33	612.25	612.27
C	013+78.42	-45.33	612.60	612.63
D	013+88.42	-45.33	612.95	612.97
E	013+98.42	-45.33	613.30	613.31
F	014+08.42	-45.33	613.65	613.65
℄ Brg. Pier 1	014+17.67	-45.33	613.97	613.97
G	014+27.67	-45.33	614.32	614.34
H	014+37.67	-45.33	614.67	614.69
I	014+47.67	-45.33	615.02	615.06
J	014+57.67	-45.33	615.37	615.41
K	014+67.67	-45.33	615.72	615.76
L	014+77.67	-45.33	616.07	616.10
M	014+87.67	-45.33	616.42	616.44
N	014+97.67	-45.33	616.77	616.78
℄ Brg. Pier 2	015+05.92	-45.33	617.06	617.06
O	015+15.92	-45.33	617.41	617.41
P	015+25.92	-45.33	617.76	617.77
Q	015+35.92	-45.33	618.11	618.13
R	015+45.92	-45.33	618.46	618.49
S	015+55.92	-45.33	618.81	618.83
T	015+65.92	-45.33	619.16	619.17
℄ S. Brg. Pier 3	015+75.17	-45.33	619.48	619.48
℄ Pier 3	015+76.11	-45.33	619.52	619.52

GIRDER SG2

LOCATION	STATION	OFFSET	THEORETICAL GRADE ELEVATIONS	THEORETICAL GRADE ELEVATIONS ADJUSTED FOR DEAD LOAD DEFLECTIONS
Bk. S. Abut.	013+82.36	47.15	612.70	612.70
℄ Brg. S. Abut.	013+85.15	47.17	612.80	612.80
A	013+95.20	47.29	613.15	613.16
B	014+05.25	47.42	613.50	613.52
C	014+15.30	47.55	613.84	613.87
D	014+25.35	47.67	614.19	614.21
E	014+35.40	47.80	614.54	614.55
F	014+45.45	47.92	614.89	614.89
℄ Brg. Pier 1	014+54.74	48.04	615.22	615.22
G	014+64.79	48.17	615.56	615.59
H	014+74.84	48.29	615.91	615.94
I	014+84.89	48.42	616.26	616.30
J	014+94.94	48.55	616.61	616.66
K	015+04.99	48.67	616.96	617.01
L	015+15.04	48.80	617.31	617.35
M	015+25.09	48.93	617.66	617.68
N	015+35.14	49.05	618.01	618.01
℄ Brg. Pier 2	015+43.44	49.16	618.30	618.30
O	015+53.49	49.28	618.65	618.65
P	015+63.54	49.41	619.00	619.02
Q	015+73.59	49.54	619.34	619.38
R	015+83.64	49.66	619.69	619.73
S	015+93.69	49.79	620.04	620.07
T	016+03.74	49.91	620.39	620.41
℄ S. Brg. Pier 3	016+13.03	50.03	620.72	620.72
℄ Pier 3	016+13.98	50.04	620.75	620.75

GIRDER SG3

LOCATION	STATION	OFFSET	THEORETICAL GRADE ELEVATIONS	THEORETICAL GRADE ELEVATIONS ADJUSTED FOR DEAD LOAD DEFLECTIONS
Bk. S. Abut.	013+84.14	51.64	612.67	612.67
℄ Brg. S. Abut.	013+86.93	51.67	612.77	612.77
A	013+97.03	51.92	613.12	613.13
B	014+07.13	52.17	613.47	613.49
C	014+17.23	52.43	613.81	613.84
D	014+27.33	52.68	614.16	614.19
E	014+37.43	52.93	614.51	614.53
F	014+47.53	53.18	614.86	614.86
℄ Brg. Pier 1	014+56.88	53.42	615.18	615.18
G	014+66.98	53.67	615.53	615.56
H	014+77.08	53.92	615.88	615.91
I	014+87.18	54.18	616.23	616.27
J	014+97.28	54.43	616.58	616.63
K	015+07.38	54.68	616.92	616.97
L	015+17.48	54.93	617.27	617.31
M	015+27.58	55.19	617.62	617.64
N	015+37.68	55.44	617.97	617.98
℄ Brg. Pier 2	015+46.01	55.65	618.26	618.26
O	015+56.11	55.90	618.61	618.61
P	015+66.21	56.15	618.95	618.97
Q	015+76.31	56.40	619.30	619.33
R	015+86.41	56.66	619.65	619.68
S	015+96.51	56.91	620.00	620.03
T	016+06.61	57.16	620.35	620.36
℄ S. Brg. Pier 3	016+15.96	57.39	620.67	620.67
℄ Pier 3	016+16.91	57.42	620.70	620.70

GIRDER SG5

LOCATION	STATION	OFFSET	THEORETICAL GRADE ELEVATIONS	THEORETICAL GRADE ELEVATIONS ADJUSTED FOR DEAD LOAD DEFLECTIONS
End of Beam	17+86.35	-48.98	625.91	625.86
N1	17+91.72	-52.47	625.96	625.93
℄ S.Brg.C.Abut.1	17+99.07	-57.25	626.03	626.03

GIRDER SG10

LOCATION	STATION	OFFSET	THEORETICAL GRADE ELEVATIONS	THEORETICAL GRADE ELEVATIONS ADJUSTED FOR DEAD LOAD DEFLECTIONS
End of Beam	18+30.52	56.67	626.70	626.66
N1	18+35.87	58.74	626.76	626.73
℄ S.Brg.C.Abut.1	18+46.80	62.97	626.88	626.88

GIRDER SG6

LOCATION	STATION	OFFSET	THEORETICAL GRADE ELEVATIONS	THEORETICAL GRADE ELEVATIONS ADJUSTED FOR DEAD LOAD DEFLECTIONS
End of Beam	17+73.57	-48.68	625.61	625.54
M1	17+81.20	-53.79	625.69	625.64
N1	17+89.15	-58.95	625.77	625.74
℄ S.Brg.C.Abut.1	17+96.50	-63.73	625.84	625.84

GIRDER SG11

LOCATION	STATION	OFFSET	THEORETICAL GRADE ELEVATIONS	THEORETICAL GRADE ELEVATIONS ADJUSTED FOR DEAD LOAD DEFLECTIONS
End of Beam	18+13.89	56.67	626.36	626.27
L1	18+15.26	57.20	626.38	626.29
M1	18+27.08	61.77	626.53	626.46
N1	18+38.89	66.34	626.67	626.63
℄ S.Brg.C.Abut.1	18+49.82	70.57	626.79	626.79

GIRDER SG7

LOCATION	STATION	OFFSET	THEORETICAL GRADE ELEVATIONS	THEORETICAL GRADE ELEVATIONS ADJUSTED FOR DEAD LOAD DEFLECTIONS
End of Beam	17+60.79	-48.68	625.29	625.23
K1	17+62.73	-49.94	625.32	625.26
L1	17+70.68	-55.10	625.41	625.36
M1	17+78.63	-60.26	625.50	625.47
N1	17+86.58	-65.43	625.58	625.56
℄ S.Brg.C.Abut.1	17+93.93	-70.20	625.66	625.66

GIRDER SG12

LOCATION	STATION	OFFSET	THEORETICAL GRADE ELEVATIONS	THEORETICAL GRADE ELEVATIONS ADJUSTED FOR DEAD LOAD DEFLECTIONS
End of Beam	17+97.27	56.67	626.00	626.07
K1	18+06.46	60.23	626.13	626.21
L1	18+18.28	64.80	626.29	626.36
M1	18+30.09	69.37	626.44	626.50
N1	18+41.91	73.94	626.57	626.60
℄ S.Brg.C.Abut.1	18+52.84	78.17	626.69	626.69

TOP OF SLAB ELEVATIONS 2
STRUCTURE NO. 016-3241

TYLIN INTERNATIONAL

DESIGNED -	SP, EKH
CHECKED -	AMD,
DRAWN -	SP, EKH
CHECKED -	AMD,
DATE -	08/02/10

REVISIONS	
NAME	DATE

SHEET NO. 9
26 SHEETS

F.A.I RTE.	SECTION	COUNTY	TOTAL SHEETS	SHEET NO.
55	0711.2R & 1011.1BR	COOK	200	13
		CONTRACT NO. 60L39		
FED. ROAD DIST. NO. 1	ILLINOIS	FED. AID PROJECT		

p:\01345\beam and bearing fabrication\55clisedata2.dgn 4:29:16 PM 8/13/2010

STATE OF ILLINOIS
DEPARTMENT OF TRANSPORTATION

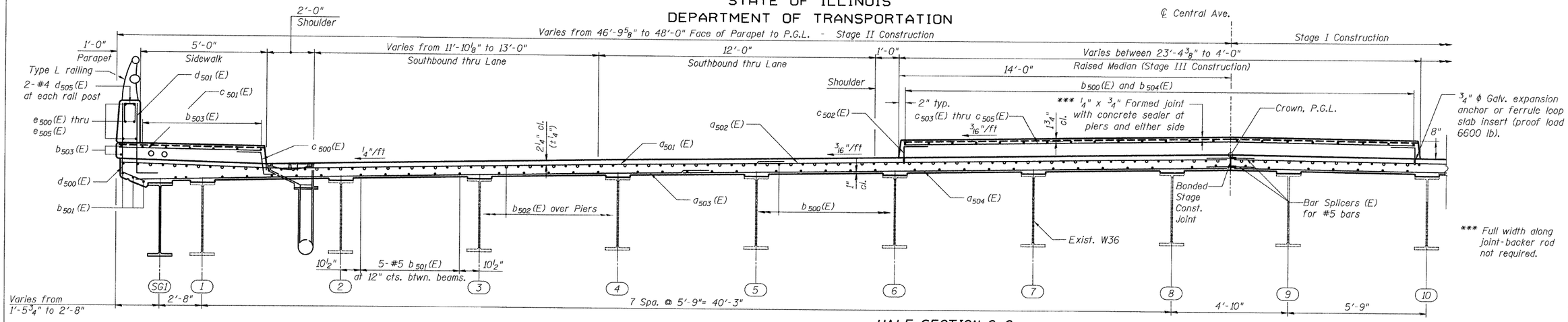

HALF SECTION C-C
(Looking North, Near Pier)

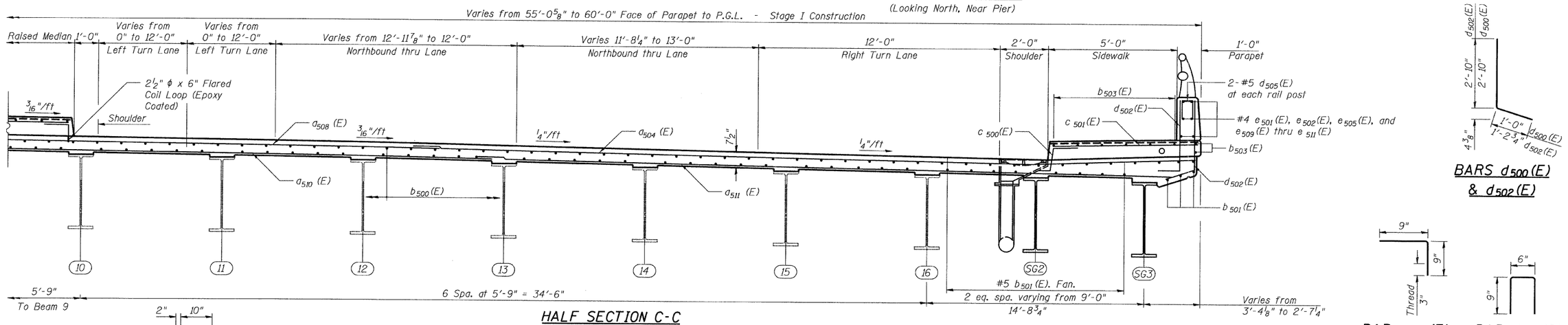

HALF SECTION C-C
(Looking North, Near Pier)

BARS d 500 (E) & d 502 (E)

BAR c 502 (E)

BAR d 508 (E)

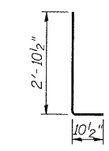

BARS d 501 (E)

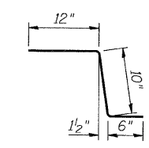

BARS c 500 (E)

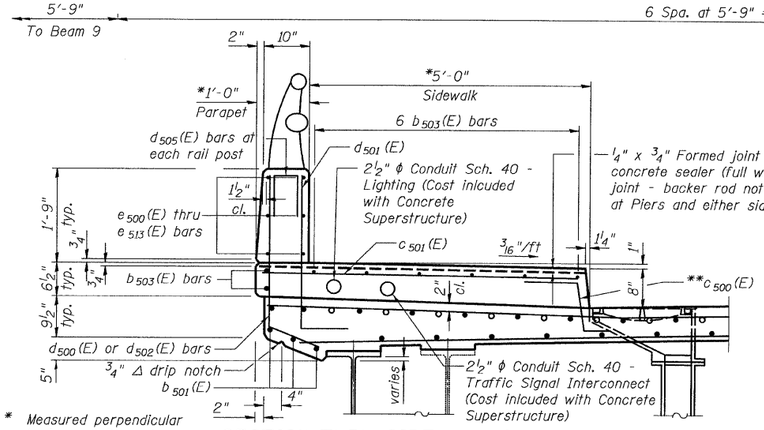

* Measured perpendicular to face of Parapet.

SECTION THRU SIDEWALK & PARAPET

** In lieu of bottom leg, c(E) bars may be cored and set according to Article 509.06 of the Standard Specifications. Cored holes shall be roughened or scored per manufacturer's recommendations. Maximum depth of cored hole shall not exceed 6".

THIS SHEET FOR INFORMATION ONLY

NOTES

1. The cost of Epoxy Coated Flared Coil Loops/Expansion Anchors/ Inserts to be included with "Reinforcement Bars, Epoxy Coated."

SUPERSTRUCTURE CROSS SECTION - SPANS 1, 2, & 3
STRUCTURE NO. 016-3241

TY·LIN INTERNATIONAL

		REVISIONS	
DESIGNED	- AMD, MI, DJR	NAME	DATE
CHECKED	- AMD, TD, MAI		
DRAWN	- DJR, CBS		
CHECKED	- AMD,		
DATE	- 08/02/10		

SHEET NO. 10	F.A.I RTE.	SECTION	COUNTY	TOTAL SHEETS	SHEET NO.
26 SHEETS	55	0711.2R & 1011.1BR	COOK	200	14
			CONTRACT NO. 60L39		
	FED. ROAD DIST. NO. 1	ILLINOIS	FED. AID PROJECT		

p:\01345\beam end bearing fabrication\55sidecksecl.dgn 2:41:40 PM 8/2/2010

STATE OF ILLINOIS
DEPARTMENT OF TRANSPORTATION

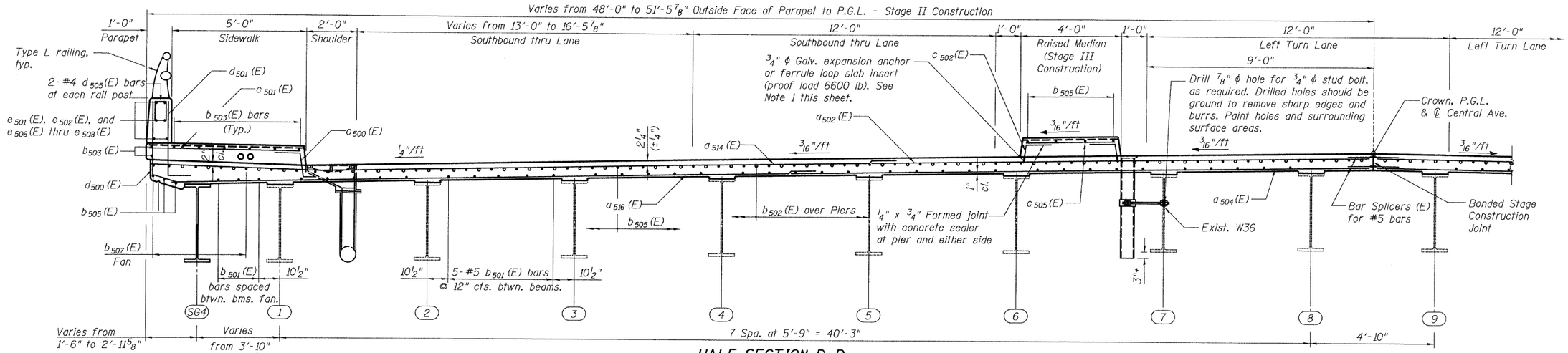

HALF SECTION D-D

(Valid to Sta. 17+47.56)
(Looking North, Near Pier)

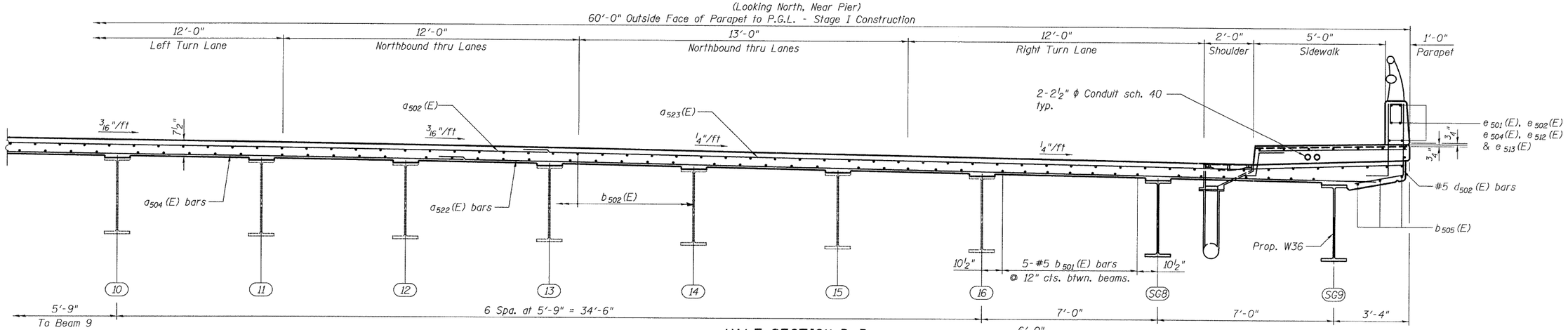

HALF SECTION D-D

(Valid to Sta. 17+76.38)
(Looking North, Near Midspan)

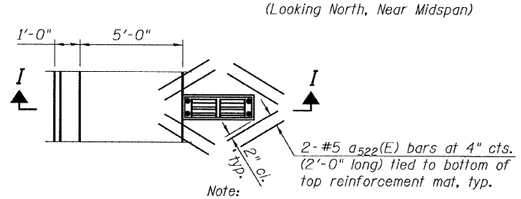

Note:
Cut longitudinal reinforcement to clear drainage scuppers.

PLAN

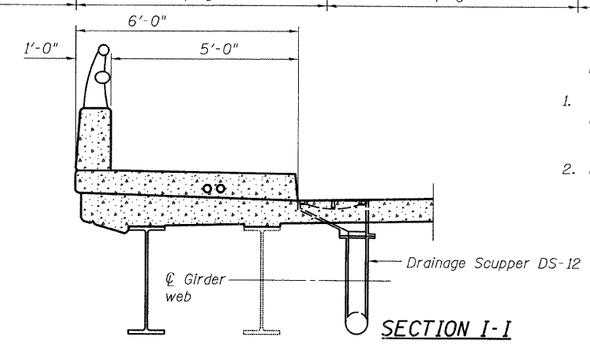

SECTION I-I

NOTES

1. The cost of Epoxy Coated Flared Coil Loops/ Expansion Anchors/Inserts are included with "Reinforcement Bars, Epoxy Coated".
2. For bar bending diagrams, see Sheet 10.

THIS SHEET FOR INFORMATION ONLY

SUPERSTRUCTURE CROSS SECTION - SPANS 4, 5 & 6
STRUCTURE NO. 016-3241

TY·LIN INTERNATIONAL

DESIGNED	MI, DJR
CHECKED	AMD, TD, MAI
DRAWN	DJR, CBS
CHECKED	AMD, TD, MAI
DATE	08/02/10

REVISIONS	
NAME	DATE

SHEET NO. 11
26 SHEETS

F.A.I RTE.	SECTION	COUNTY	TOTAL SHEETS	SHEET NO.
55	0711.2R & 1011.1BR	COOK	200	15
		CONTRACT NO. 60L39		
FED. ROAD DIST. NO. 1	ILLINOIS	FED. AID PROJECT		

p:\01345\beam end bearing fabrication\155cldecksec2.dgn 8/2/2010 2:41:41 PM

STATE OF ILLINOIS
DEPARTMENT OF TRANSPORTATION

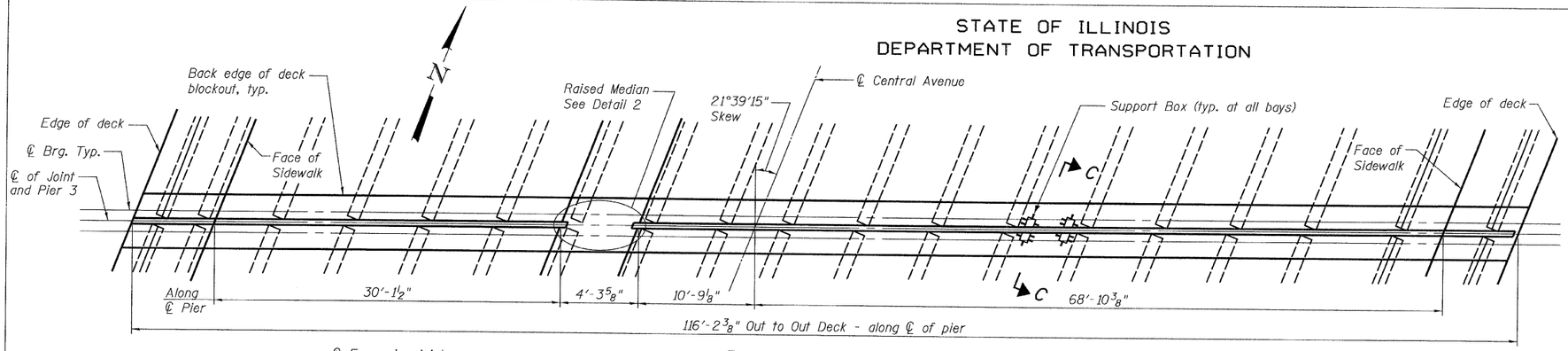

PLAN

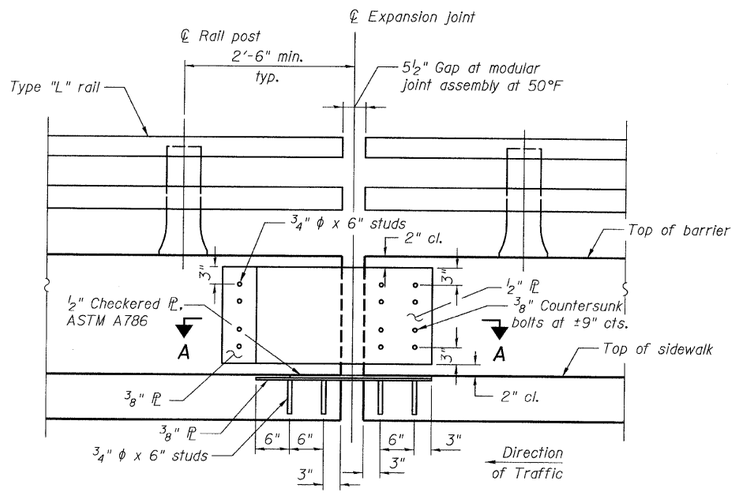

SECTION B-B

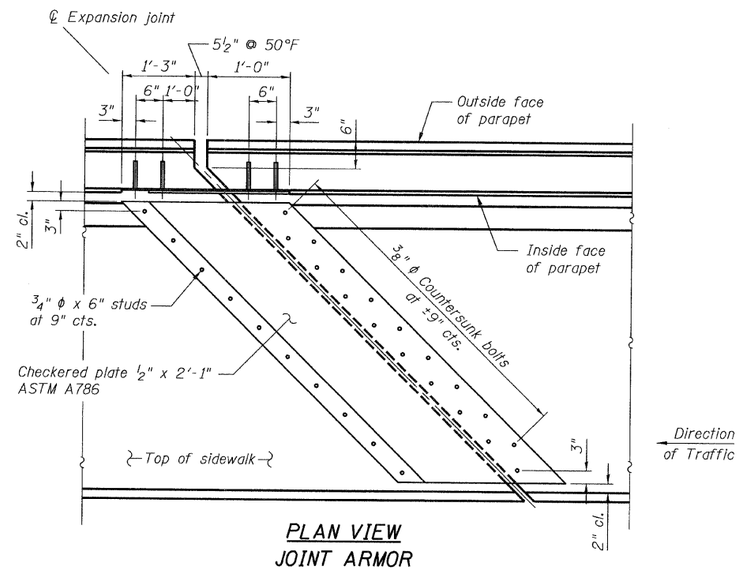

PLAN VIEW
JOINT ARMOR

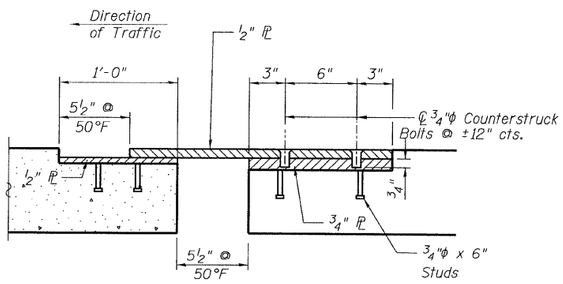

SECTION A-A

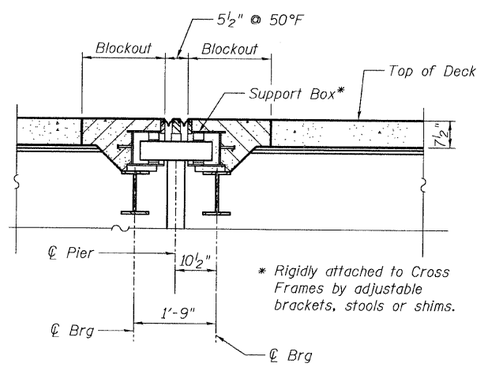

* Rigidly attached to Cross Frames by adjustable brackets, stools or shims.

SECTION C-C

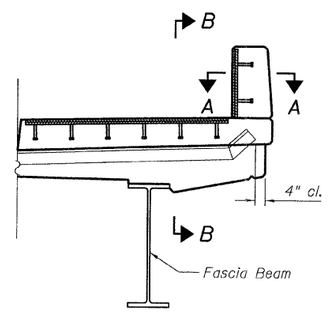

DETAIL 1

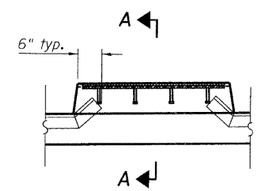

DETAIL 2

Note:
Girders not shown.

GENERAL NOTES

1. The expansion joint device shall be a prefabricated modular assembly with multiple support bars and separator beams, providing a continuous seal across the deck.
2. All splices of center beams and edge beams shall be full penetration welds. Upturn splices may be partial penetration welds.
3. Joint shall be fabricated according to the manufacturer's recommendations and as shown in the Special Provisions for Modular Expansion Joint and as approved by the Engineer.
4. Joint openings shall be adjusted according to Article 520.04 of the Standard Specifications when the concrete blockout is cast at an ambient temperature other than 50° F.
5. Joint shall be fabricated to conform to the roadway profile and cross slope.
6. The cost of furnishing all material for the sliding plate assemblies at the parapets and median barrier shall be included with Furnishing Modular Expansion Joints. The sliding plate assembly shall be galvanized.
7. Countersunk bolts and concrete inserts shall be Hot-Dipped Galvanized according to AASHTO M232.
8. Barrier plates to be AASHTO M270, Grade 36 and to be Hot-Dipped Galvanized according to AASHTO M111 after fabrication.
9. ¾" x 6" studs shall be according to Article 1006.32 of the Standard Specifications.
10. All anchor studs shall be included with Furnishing Modular Expansion Joint (unless noted otherwise).
11. Modular expansion joint shall be assembled in their final relative position with the ends in place for shop inspection and acceptance.

BILL OF MATERIAL

ITEM	UNIT	TOTAL
Furnishing Modular Expansion Joint 6"	Foot	99

SOUTH APPROACH MODULAR EXPANSION JOINT DETAILS AT PIER 3 STRUCTURE NO. 016-3241

TY·LIN INTERNATIONAL

		REVISIONS	
DESIGNED - MRB		NAME	DATE
CHECKED - AMD,			
DRAWN - MRB			
CHECKED - AMD,			
DATE - 08/02/10			

SHEET NO. 12
26 SHEETS

F.A.I RTE.	SECTION	COUNTY	TOTAL SHEETS	SHEET NO.
55	0711.2R & 1011.1BR	COOK	200	16
		CONTRACT NO. 60L39		
FED. ROAD DIST. NO. 1	ILLINOIS	FED. AID PROJECT		

p:\01345\beam and bearing fabrication\55plex_tdet.dgn 8/2/2010 2:41:42 PM

STATE OF ILLINOIS
DEPARTMENT OF TRANSPORTATION

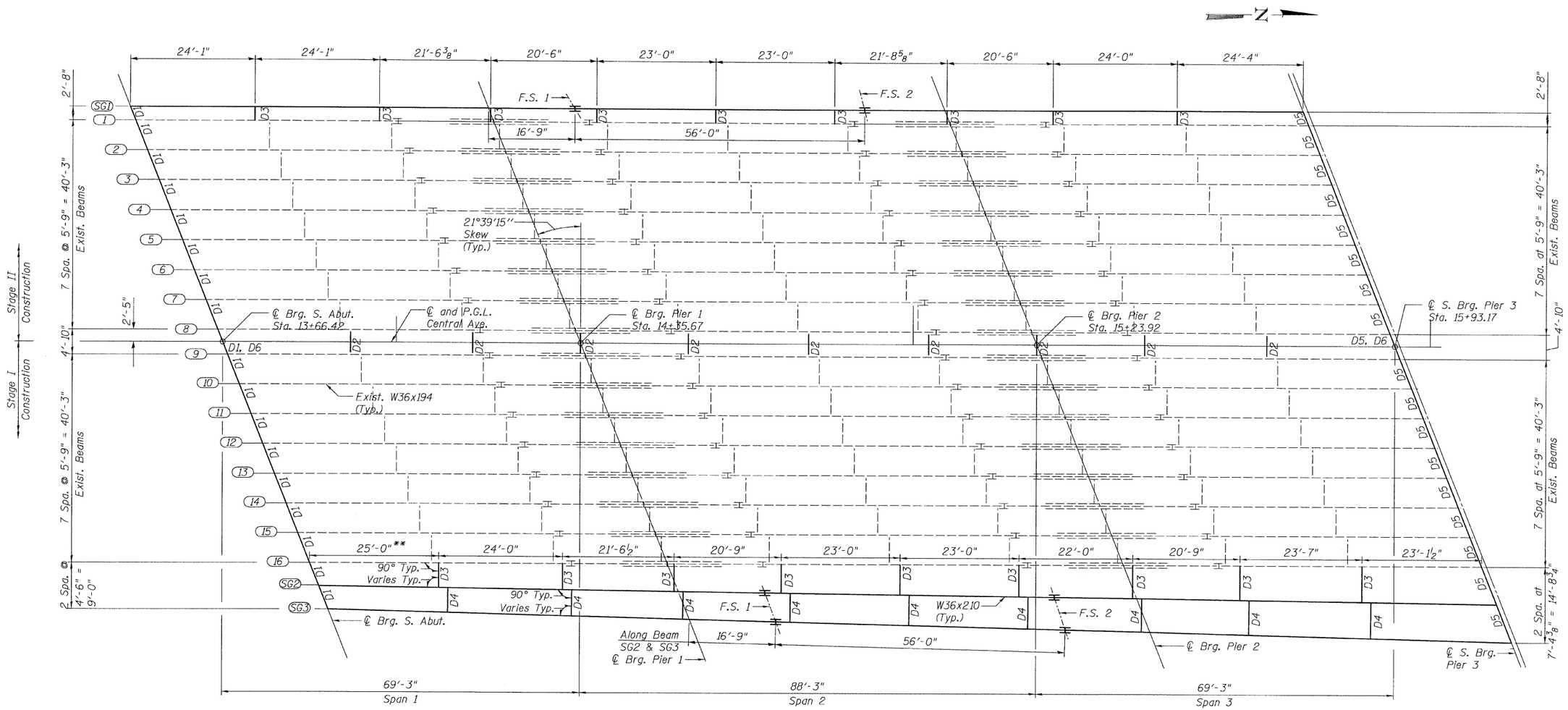

FRAMING PLAN

TOP OF FLANGE ELEVATIONS - SPANS 1,2,3*

Girder	℄ Brg. S. Abut	℄ Pier 1	Field Splice 1	Field Splice 2	℄ Pier 2	℄ S. Brg. Pier 3
SG1	610.84	613.18	613.75	615.71	616.27	618.77
SG2	612.09	614.42	614.97	616.91	617.50	620.00
SG3	612.05	614.38	614.92	616.85	617.46	619.95

* For fabrication use only

** Diaphragm Spacing shown is along the ℄ of Beam 16 and SG2.

BEARING SEAT ELEVATIONS

"For Information Only"

Girder Line	℄ Brg. S. Abut.	℄ Brg. Pier 1	℄ Brg. Pier 2	℄ S. Brg. Pier 3
SG1	607.45	609.89	612.74	615.13
1	608.53	609.68	611.74	615.10
8	608.40	610.74	612.81	616.09
9	608.47	610.81	612.87	616.16
16	608.53	610.86	612.93	616.25
SG2	608.70	611.13	613.97	616.36
SG3	608.66	611.10	613.93	616.31

Elevations of existing beams on Piers 1 & 2 are to top of existing concrete pad.

NOTES:

1. F.S. - denotes girder Field Splice.
2. For Diaphgram details, see Sheet 19.
3. For Field Splice Details, see Sheet 22.
4. F.P. - denotes Framing Point.
5. Structural Steel for beams, splices, diaphrams marked "FB" and associated connection plates shall conform to the requirements of AASHTO M270 Grade 50.
6. All diaphrams shall be installed as steel is erected and secured with erection pins and bolts. Individual diaphrams at supports may be temporarily disconnected to install bearing anchor rods.

FRAMING PLAN - SPANS 1, 2 & 3
STRUCTURE NO. 016-3241

TYLIN INTERNATIONAL

		REVISIONS	
DESIGNED - SP		NAME	DATE
CHECKED - AMD,			
DRAWN - SP			
CHECKED - AMD,			
DATE - 08/02/10			

SHEET NO. 13
26 SHEETS

F.A.I RTE.	SECTION	COUNTY	TOTAL SHEETS	SHEET NO.
55	0711.2R & 1011.1BR	COOK	200	17
		CONTRACT NO. 60L39		
FED. ROAD DIST. NO. 1	ILLINOIS	FED. AID PROJECT		

8/2/2010

p:\01345\beam and bearing fabrication\55clframeplan1.dgn 2:41:43 PM

\\Ge-ttfmaeplan1.dgn 8/2/2010 2:41:43 PM

STATE OF ILLINOIS
DEPARTMENT OF TRANSPORTATION

BEARING SEAT ELEVATIONS

"For Information Only"

Girder Line	℄ N. Brg. Pier 3	℄ Brg. Pier 4	℄ Brg. Pier 5	℄ S. Brg. C. Abut. 1
SG4	615.16	617.55	620.38	622.11
1	615.10	616.65	620.28	622.06
8	616.19	617.66	621.29	623.07
9	616.31	617.75	621.25	622.93
16	616.25	617.73	621.24	622.92
SG8	616.43	618.73	621.37	622.90
SG9	616.38	618.67	621.29	622.80

Elevations of existing beams on Piers 4 & 5 are to top of existing concrete pad.

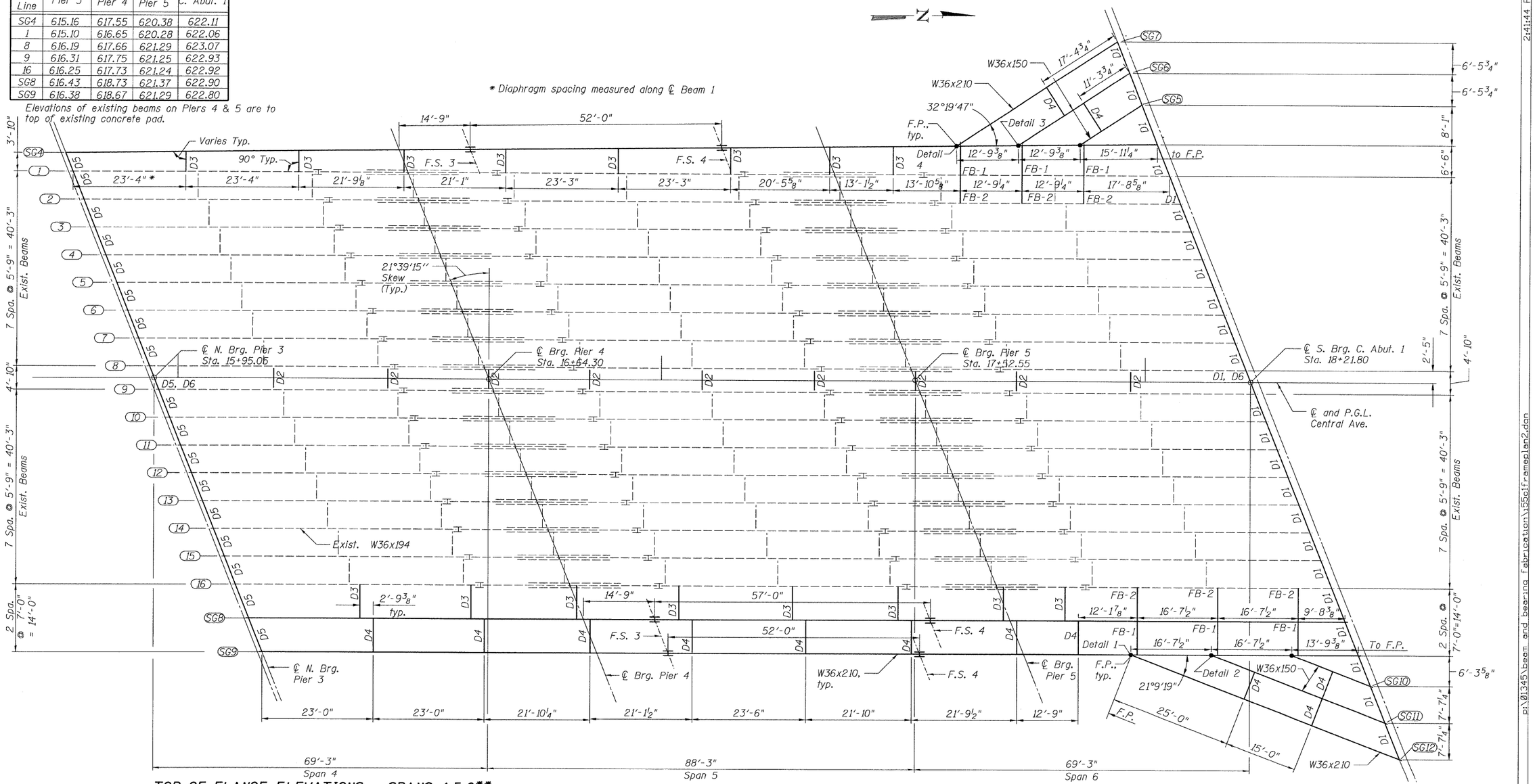

TOP OF FLANGE ELEVATIONS - SPANS 4,5,6**

Girder	℄ N. Brg. Pier 3	℄ Pier 4	Field Splice 3	Field Splice 4	℄ Pier 5	℄ S. Brg. C Abut. 1
SG4	618.80	621.07	621.57	623.17	623.72	625.55
SG8	620.07	622.26	622.73	624.31	624.70	626.34
SG9	620.02	622.20	622.66	624.24	624.62	626.25

** For fabrication use only

Girder	F.P.	℄ S. Brg. C Abut. 1
SG5	625.13	625.31
SG6	624.78	625.11
SG7	624.42	624.92

Girder	F.P.	℄ S. Brg. C Abut. 1
SG10	625.91	626.16
SG11	625.53	626.05
SG12	625.14	625.95

FRAMING PLAN

NOTES:

For General Notes, see Sheet 2.

For Details 1-4, see Sheets 20 & 21.

F.P. denotes Framing Point

FRAMING PLAN - SPANS 4, 5 & 6
STRUCTURE NO. 016-3241

TY·LIN INTERNATIONAL

DESIGNED	PK
CHECKED	AMD.
DRAWN	PK
CHECKED	AMD.
DATE	08/02/10

REVISIONS	
NAME	DATE

SHEET NO. 14
26 SHEETS

F.A.I RTE.	SECTION	COUNTY	TOTAL SHEETS	SHEET NO.
55	0711.2R & 1011.1BR	COOK	200	18
		CONTRACT NO. 60L39		
FED. ROAD DIST. NO. 1	ILLINOIS	FED. AID PROJECT		

8/2/2010

c:\01345\beam and bearing fabrication\55clf-ameplan2.dgn

2:41:44 PM

STATE OF ILLINOIS
DEPARTMENT OF TRANSPORTATION

MOMENT TABLE - SPANS 1, 2 & 3

		SG2				
		0.4 Sp. 1	Pier 1	.5 Sp. 2	Pier 2	0.6 Sp. 3
Is	(in^4)	13200	13200	13200	13200	13200
Ic (n)	(in^4)	26804	--	28241	--	29465
Ic (3n)	(in^4)	19604	--	20595	--	21509
Ss	(in^3)	719	719	719	719	719
Sc (n)	(in^3)	952	--	968	--	981
Sc (3n)	(in^3)	853	--	869	--	883
Z	(in^3)	--		--		
$\wp$	(k/')	0.80	1.20	0.84	1.20	0.85
$M\wp$	('k)	224	681	283	744	305
$s\wp$	(k/')	0.36	--	0.36	--	0.35
$Ms\wp$	('k)	127	--	151	--	123
ML	('k)	374	285	497	324	531
M (IM)	('k)	93	71	124	81	133
$\frac{5}{3}[ML+I]$	('k)	778	593	1035	675	1107
Ma	('k)	1468	1657	1910	1845	1995
* Mu	('k)	4395		4643		4648
$fs\wp$ non-comp	(ksi)	3.7	11.4	4.7	12.4	5.1
$fs\wp$ (comp)	(ksi)	1.8	--	2.1	--	1.7
$fs\frac{5}{3}(ML+MI)$	(ksi)	9.8	9.9	12.8	11.3	13.5
fs (Overload)	(ksi)	15.3	21.3	19.6	23.7	20.3
** fs (Total)	(ksi)	--	27.6	--	30.8	--
VR	(k)	32.3	--	31.2	--	41.2

MOMENT TABLE - SPANS 4, 5 & 6

		SG8			SG9					SG12	
		0.4 Sp. 4 or 0.6 Sp. 6	Pier 4 or 5	0.5 Sp. 5	0.4 Sp. 4	Pier 4	.5 Sp. 5	Pier 5	0.6 Sp. 6	.5 Sp. 6	
Is	(in^4)	13200	13200	13200	13200	13200	13200	13200	13200	13200	
Ic (n)	(in^4)	29559	--	29559	29370	--	29370	--	29370	25844	
Ic (3n)	(in^4)	21582	--	21582	21436	--	21436	--	21436	18986	
Ss	(in^3)	719	719	719	719	719	719	719	719	719	
Sc (n)	(in^3)	982	--	982	980	--	980	--	980	941	
Sc (3n)	(in^3)	884	--	884	882	--	882	--	882	842	
Z	(in^3)	--		--	--	767	--		--	--	
$\wp$	(k/')	0.91	1.26	0.91	0.89	1.24	0.89	2.21	1.51	0.74	(1)
$M\wp$	('k)	295	763	315	309	685	248	1016	575	296	
$s\wp$	(k/')	0.35	--	0.35	0.35	--	0.35	--	0.70	0.43	
$Ms\wp$	('k)	123	--	144	131	--	116	--	291	181	
ML	('k)	532	357	578	500	335	555	348	508	287	
M (Im)	('k)	133	82	144	130	80	128	83	132	78	
$\frac{5}{3}[ML+I]$	('k)	1108	732	1203	1050	692	1138	718	1067	608	
Ma	('k)	1984	1943	2161	1937	1790	1953	2255	2513	1411	
* Mu	('k)	4604		4767	4748		4748		4748	4143	
$fs\wp$ non-comp	(ksi)	4.9	12.7	5.3	5.2	11.4	4.1	17.0	9.6	4.9	
$fs\wp$ (comp)	(ksi)	1.7	--	2.0	1.8	--	1.6	--	4.0	2.6	
$fs\frac{5}{3}(ML+MI)$	(ksi)	13.5	12.2	14.7	12.9	11.5	13.9	12.0	13.1	7.8	
fs (Overload)	(ksi)	20.1	24.9	21.9	19.8	23.0	19.6	28.9	26.6	15.3	
** fs (Total)	(ksi)	--	32.4	--	--	29.9	--	37.6	--	--	
VR	(k)	42.7	--	36.0	42.5	--	36.7	--	43.2	38.8	

(1) Average

* Compact section
** Braced non-compact and partially braced section

REACTION TABLE - SPANS 1, 2 & 3

		SG2			
		S. Abut.	Pier 1	Pier 2	S. Brg. Pier 3
$R\wp$	(k)	28.2	97.4	105.7	33.6
RL	(k)	29.1	43.1	50.1	37.9
RI	(k)	7.2	7.3	8.5	9.5
R (Total)	(k)	64.5	147.8	164.3	81.0

REACTION TABLE - SPANS 4, 5 & 6

		SG8			SG9				SG12
		N. Brg. Pier 3 / S. Brg. C.Abut. 1		Pier 4 or 5	N. Brg. Pier 3	Pier 4	Pier 5	S. Brg. C.Abut. 1	S. Brg. C.Abut. 1
$R\wp$	(k)	33.3		110.0	33.9	103.1	152.0	62.7	34.8
RL	(k)	38.8		53.3	36.6	50.2	50.6	36.7	26.7
RI	(k)	9.7		9.1	9.6	9.0	9.1	9.6	7.2
R (Total)	(k)	81.8		172.4	80.1	162.3	211.7	109.0	68.7

I_s, S_s: Non-composite moment of inertia and section modulus of the steel section used for computing f_s (Total and Overload) due to non-composite dead loads ($in.^4$ and $in.^3$).
$I_c(n)$, $S_c(n)$: Composite moment of inertia and section modulus of the steel and deck based upon the modular ratio, "n", used for computing f_s (Total and Overload) due to short-term composite live loads ($in.^4$ and $in.^3$).
$I_c(3n)$, $S_c(3n)$: Composite moment of inertia and section modulus of the steel and deck based upon 3 times the modular ratio, "3n", used for computing f_s (Total and Overload) due to long-term composite (superimposed) dead loads ($in.^4$ and $in.^3$).
Z: Plastic Section Modulus of the steel section in non-composite areas ($in.^3$).
$\wp$: Un-factored non-composite dead load (kips/ft.).
$M\wp$: Un-factored moment due to non-composite dead load (kip-ft.).
$s\wp$: Un-factored long-term composite (superimposed) dead load (kips/ft.)
$M_s\wp$: Un-factored moment due to long-term composite (superimposed) dead load (kip-ft.).
ML: Un-factored live load moment (kip-ft.).
M_I: Un-factored moment due to impact (kip-ft.).
M_a: Factored design moment (kip-ft.).
$1.3\ [M\wp + M_s\wp + \frac{5}{3}(ML + M_I)]$
M_u: Compact composite moment capacity according to AASHTO LFD 10.50.1.1 or compact non-composite moment capacity according to AASHTO LFD 10.48.1 (kip-ft.).
f_s (Overload): Sum of stresses as computed from the moments below (ksi).
$M\wp + M_s\wp + \frac{5}{3}(ML + M_I)$
f_s (Total): Sum of stresses as computed from the moments below on non-compact section (ksi).
$1.3\ [M\wp + M_s\wp + \frac{5}{3}(ML + M_I)]$
VR: Maximum L + impact shear range within the composite portion of the span for stud shear connector design (kips).

MOMENT & REACTION TABLES
STRUCTURE NO. 016-3241

TY·LIN INTERNATIONAL

DESIGNED	-	PK	
CHECKED	-	AMD.	
DRAWN	-	PK	
CHECKED	-	AMD.	
DATE	-	08/02/10	

REVISIONS

NAME	DATE

SHEET NO. 15
26 SHEETS

F.A.I RTE.	SECTION	COUNTY	TOTAL SHEETS	SHEET NO.
55	0711.2R & 1011.1BR	COOK	200	19
		CONTRACT NO. 60L39		
FED. ROAD DIST. NO. 1	ILLINOIS	FED. AID PROJECT		

4:31:45 PM
p:\01345\beam and bearing fabrication\55ciframetables.dgn
8/13/2010

STATE OF ILLINOIS
DEPARTMENT OF TRANSPORTATION

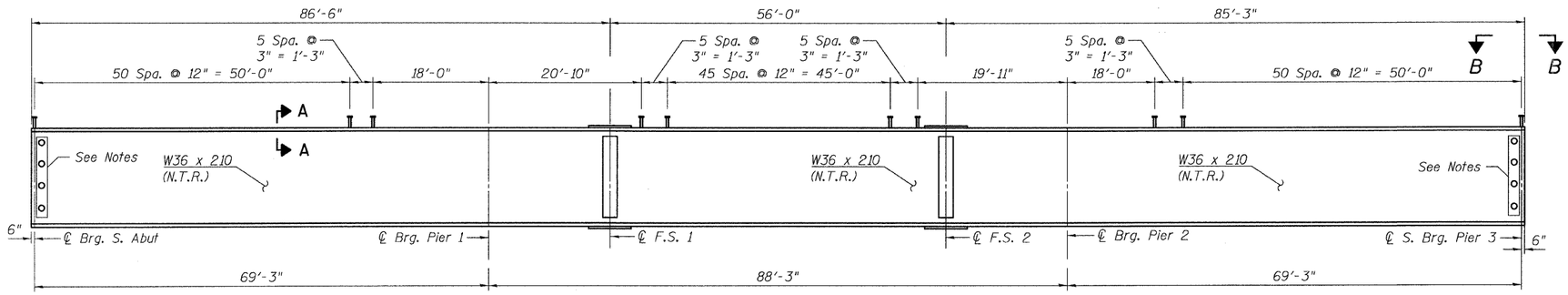

GIRDER ELEVATION - SG1

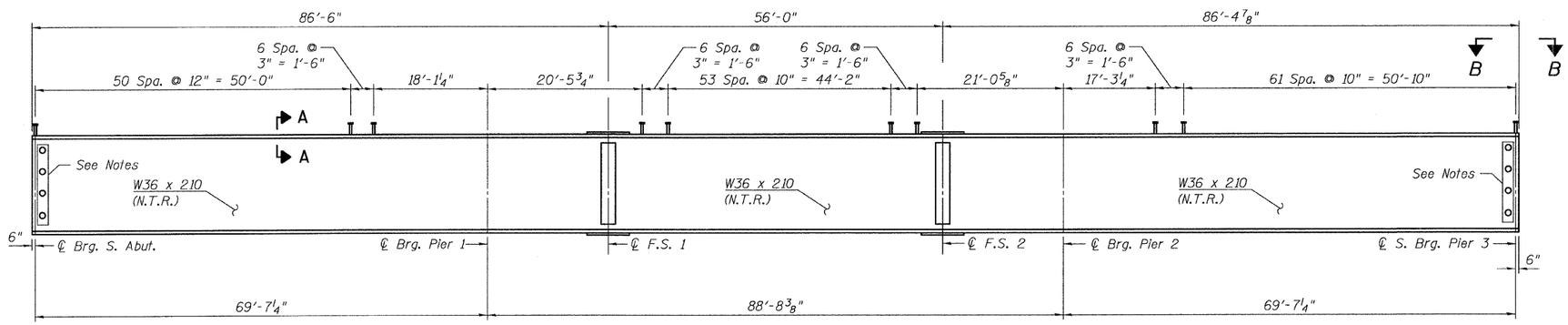

GIRDER ELEVATION - SG2

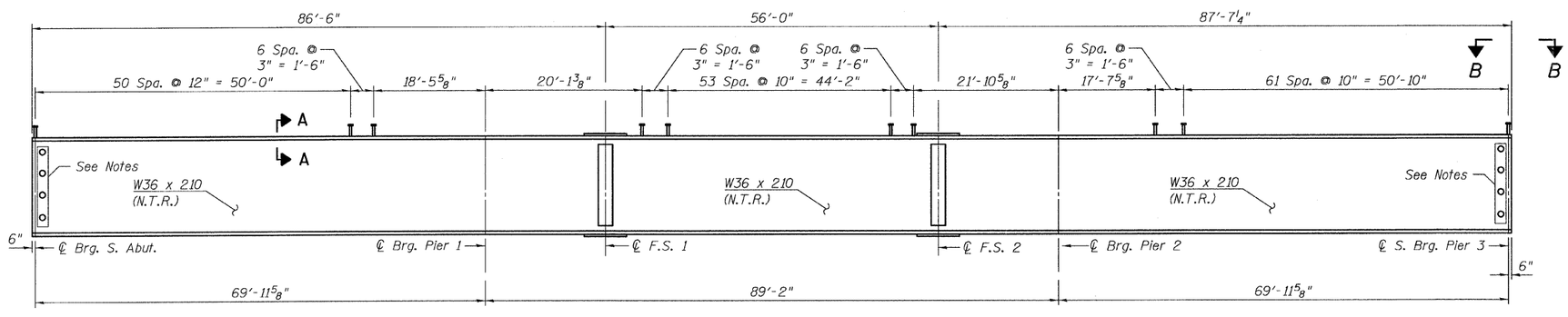

GIRDER ELEVATION - SG3

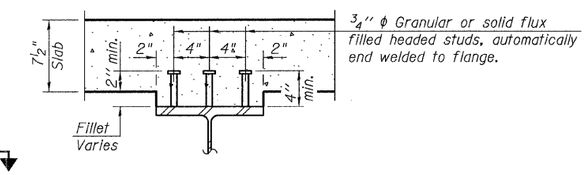

SECTION A-A

"Not In Contract"

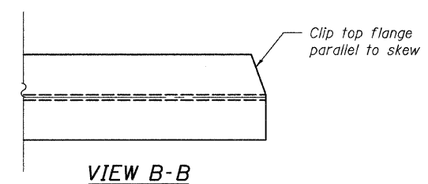

VIEW B-B

NOTES

See Sheet No. 19 for number and location of holes in beam webs.

Load carrying components designated "NTR" shall conform to the Supplemental Requirements for Notch Toughness, Zone 2.

GIRDER ELEVATIONS
SPANS 1, 2 & 3
STRUCTURE NO. 016-3241

TY·LIN INTERNATIONAL

DESIGNED	- PK	REVISIONS	
CHECKED	- AMD,	NAME	DATE
DRAWN	- PK		
CHECKED	- AMD,		
DATE	- 08/02/10		

SHEET NO. 16
26 SHEETS

F.A.I RTE.	SECTION	COUNTY	TOTAL SHEETS	SHEET NO.
55	0711.2R & 1011.1BR	COOK	200	20
		CONTRACT NO. 60L39		
FED. ROAD DIST. NO. 1	ILLINOIS	FED. AID PROJECT		

4:31:46 PM
p:\01345\beam and bearing fabrication\155clframeatt1.dgn
8/13/2010

STATE OF ILLINOIS
DEPARTMENT OF TRANSPORTATION

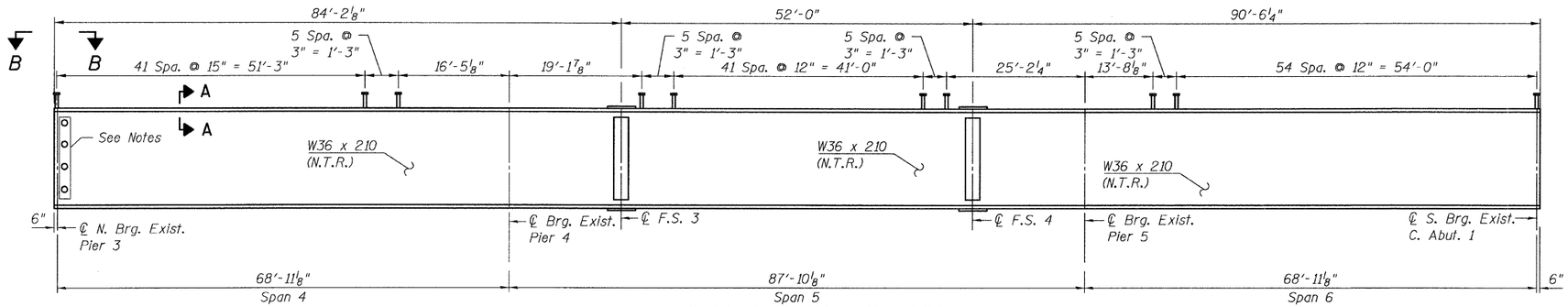

GIRDER ELEVATION - SG4

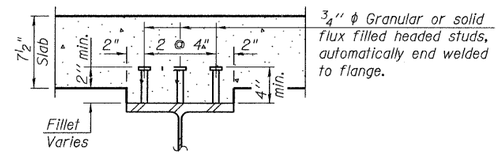

SECTION A-A

"Not In Contract"

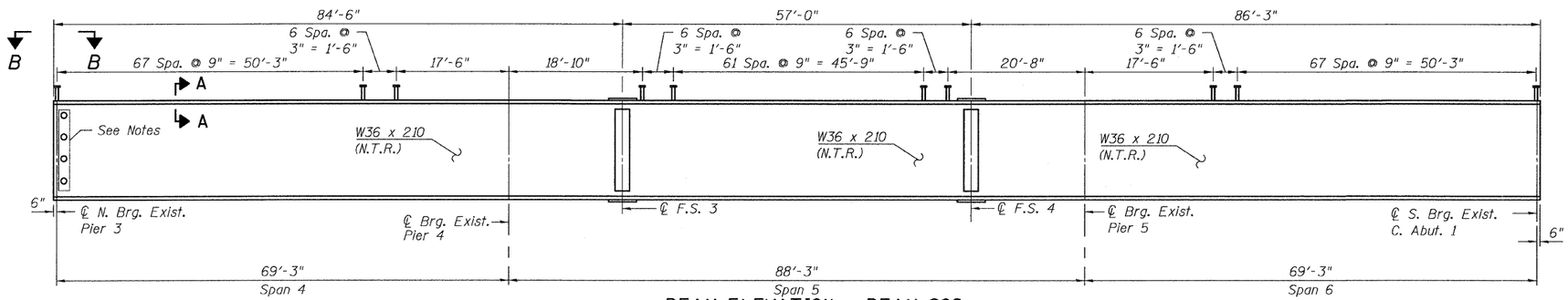

BEAM ELEVATION - BEAM SG8

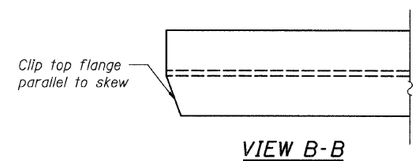

VIEW B-B

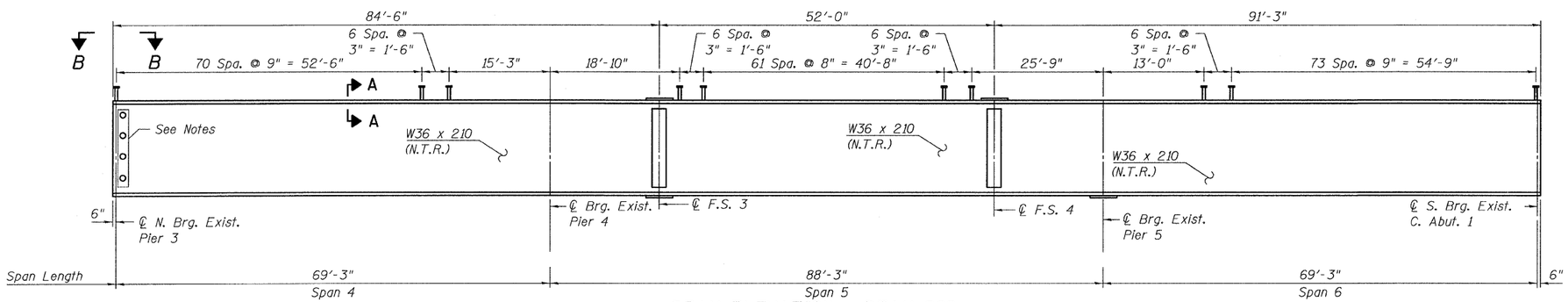

BEAM ELEVATION - BEAM SG9

NOTES

See Sheet No. 19 for number & location of holes in beam webs.

Load carrying components designated "NTR" shall conform to the Supplemental Requirements for Notch Toughness, Zone 2.

GIRDER ELEVATIONS
SPANS 4, 5 & 6
STRUCTURE NO. 016-3241

T·Y·LIN INTERNATIONAL

		REVISIONS	
DESIGNED	- PK	NAME	DATE
CHECKED	- AMD,		
DRAWN	- PK		
CHECKED	- AMD,		
DATE	- 08/02/10		

SHEET NO. 17
26 SHEETS

F.A.I RTE.	SECTION	COUNTY	TOTAL SHEETS	SHEET NO.
55	0711.2R & 1011.1BR	COOK	200	21
		CONTRACT NO. 60L39		
FED. ROAD DIST. NO. 1	ILLINOIS	FED. AID PROJECT		

c:\01345\beam and bearing fabrication\155cliframedtl2.dgn 8/13/2010 4:31:46 PM

\155cliframedtl2.dgn 8/13/2010 4:31:46 PM

STATE OF ILLINOIS
DEPARTMENT OF TRANSPORTATION

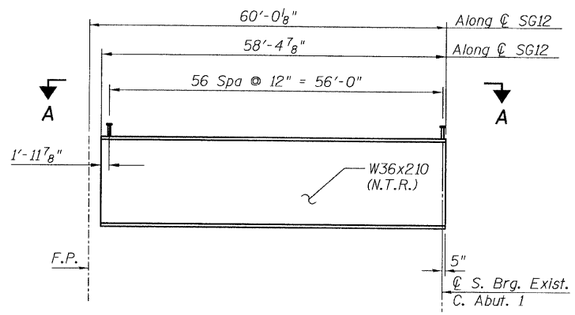

GIRDER ELEVATION - SG12

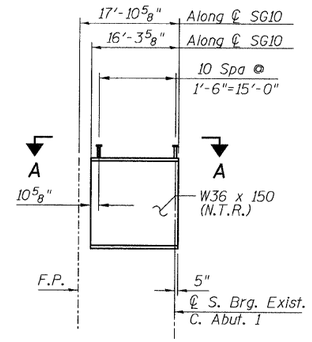

GIRDER ELEVATION - SG10

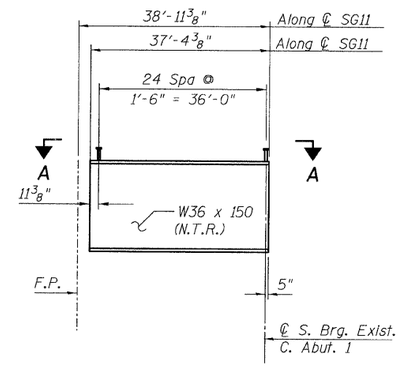

GIRDER ELEVATION - SG11

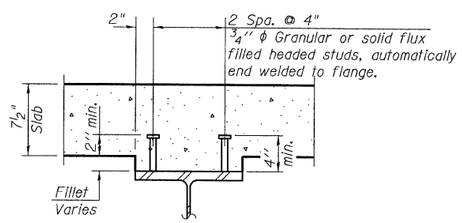

SHEAR STUD LAYOUT

(NOT IN CONTRACT)

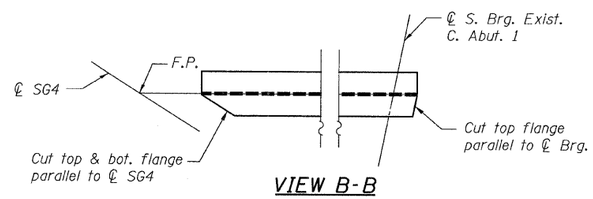

VIEW B-B

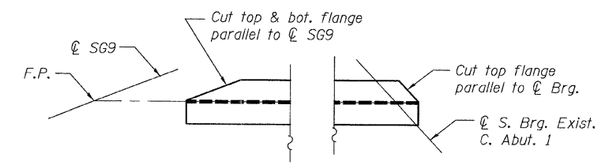

VIEW A-A

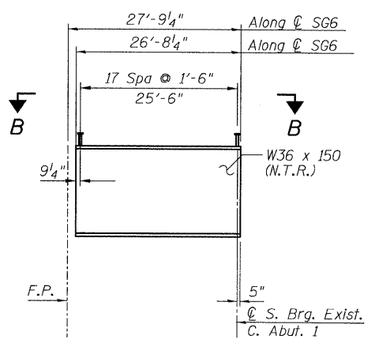

GIRDER ELEVATION - SG6

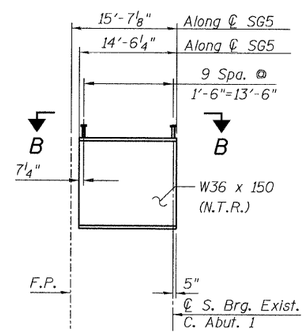

GIRDER ELEVATION - SG5

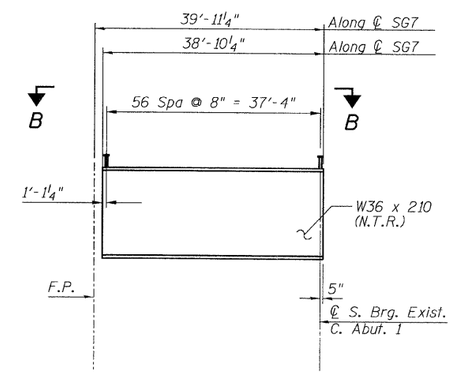

GIRDER ELEVATION - SG7

NOTES:

1. F.P. - denotes Framing Point
2. Lengths shown are along beam ℄.
3. Work this sheet with sheets 20 and 21.
4. Load carrying components designated "NTR" shall conform to the Supplemental Requirements for Notch Toughness, Zone 2.

GIRDER ELEVATIONS FLARED GIRDERS
STRUCTURE NO. 016-3241

TYLIN INTERNATIONAL

DESIGNED	-	SP	
CHECKED	-	AMD,	
DRAWN	-	SP	
CHECKED	-	AMD,	
DATE	-	08/02/10	

REVISIONS

NAME	DATE

SHEET NO. 18
26 SHEETS

F.A.I RTE.	SECTION	COUNTY	TOTAL SHEETS	SHEET NO.
55	0711.2R & 1011.1BR	COOK	200	22
		CONTRACT NO. 60L39		
FED. ROAD DIST. NO. 1	ILLINOIS	FED. AID PROJECT		

p:\01345\beam and bearing fabrication\55clf-amed13.dgn 2:41:49 PM

8/2/2010

STATE OF ILLINOIS
DEPARTMENT OF TRANSPORTATION

** Cost of Timber Block Posts is included with Erecting Structural Steel.

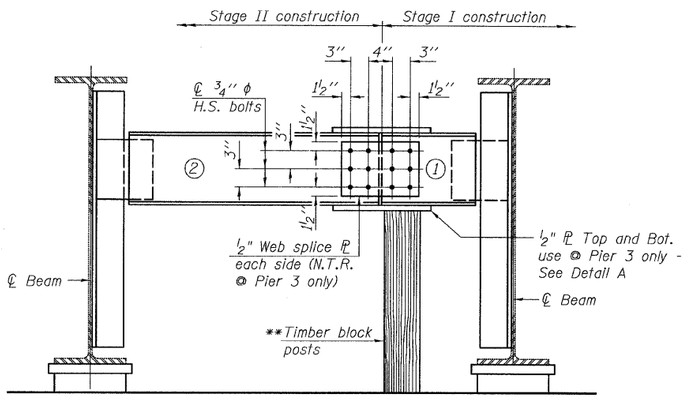

END DIAPHRAGM (D6)

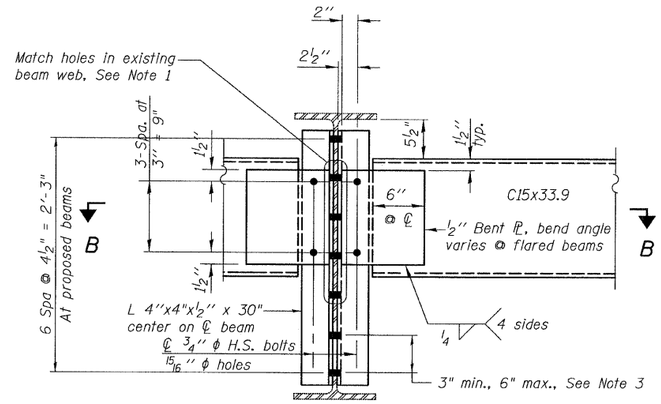

END DIAPHRAGM (D1)

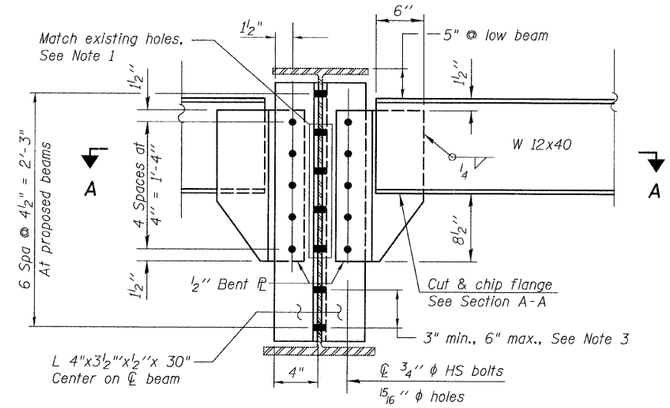

END DIAPHRAGM - (D5)

(Existing Beam shown)

END DIAPHRAGM STAGE CONSTRUCTION SEQUENCE

1.) Order diaphragm in two sections.
2.) Attach section ① of diaphragm to beam 9
3.) Place timber block posts between section ① of diaphragm and abutment bearing section.
4.) Attach section ② of diaphragm to both beam 8 and section ① of diaphragm during stage II construction with splice plates.
5.) Remove timber block posts.

Note:
Load carrying components designated "NTR" shall conform to the Supplemental Requirements for Notch Toughness, Zone 2.

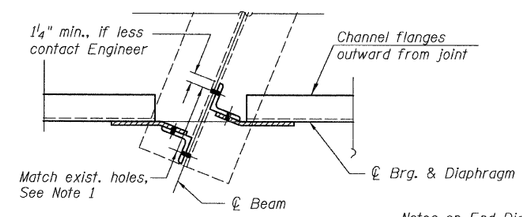

SECTION B-B

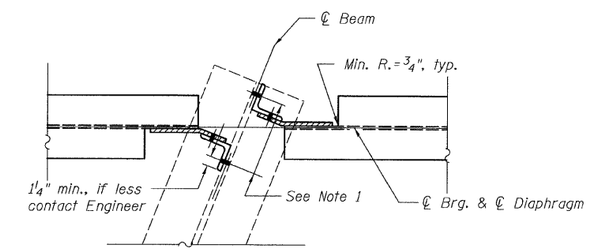

SECTION A-A

Notes on End Diaphragms (D1, D5):

1. Location of existing holes shall be field verified. Cost included with "Field Measurements".
2. The details shown are similar at the proposed beams.
3. Place additional holes in existing beam web as necessary, use 7 bolts minimum.
4. All bolts in beam webs shall be 7/8" H.S. Bolts, 15/16" ϕ holes.
5. Two hardened washers required for each set of oversized holes.

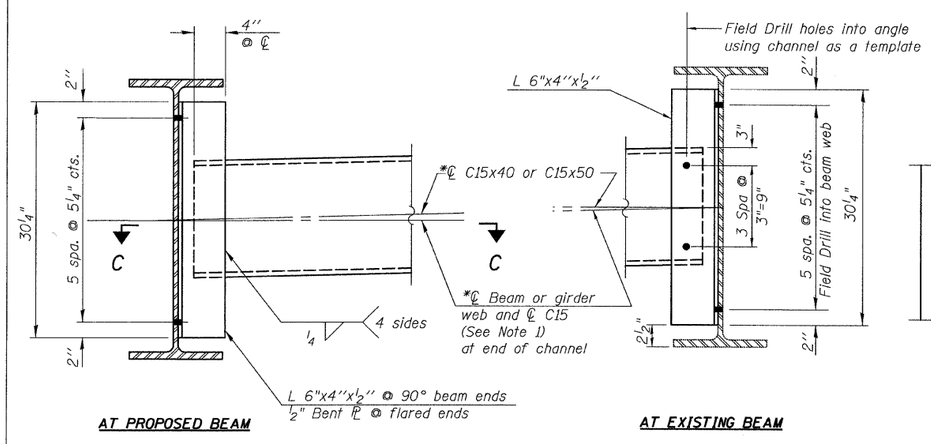

INTERIOR DIAPHRAGMS (D2 THRU D4)

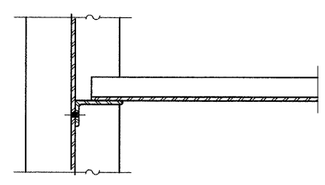

SECTION C-C

Notes on Interior Diaphragms (D2 thru D4):

1. Alternate channels are permitted to facilitate material acquisition. Calculated weight of structural steel is based on the lighter section.
2. The alternate, if utilized, shall be provided at no additional cost to the Department.
3. 3/4" H.S. Bolts, 15/16" ϕ holes.
4. Two hardened washers required for each set of oversized holes.

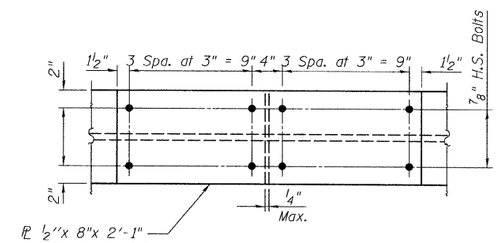

DETAIL A

FRAMING DETAILS 1
DIAPHRAGMS
STRUCTURE NO. 016-3241

TY·LIN INTERNATIONAL	DESIGNED - JMA	REVISIONS	
	CHECKED - AMD.	NAME	DATE
	DRAWN - JMA		
	CHECKED - AMD.		
	DATE - 08/02/10		

SHEET NO. 19	F.A.I RTE.	SECTION	COUNTY	TOTAL SHEETS	SHEET NO.
26 SHEETS	55	0711.2R & 1011.1BR	COOK	200	23
			CONTRACT NO. 60L39		
	FED. ROAD DIST. NO. 1	ILLINOIS	FED. AID PROJECT		

p:\01345\beam and bearing fabrication\55clf-amedtl5.dgn 2:41:50 PM 8/2/2010

STATE OF ILLINOIS
DEPARTMENT OF TRANSPORTATION

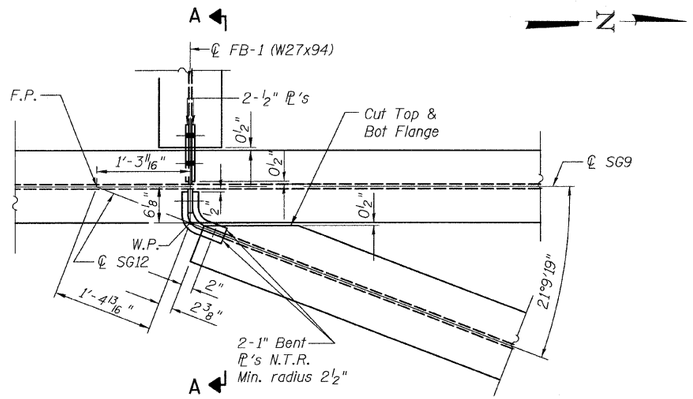

DETAIL 1

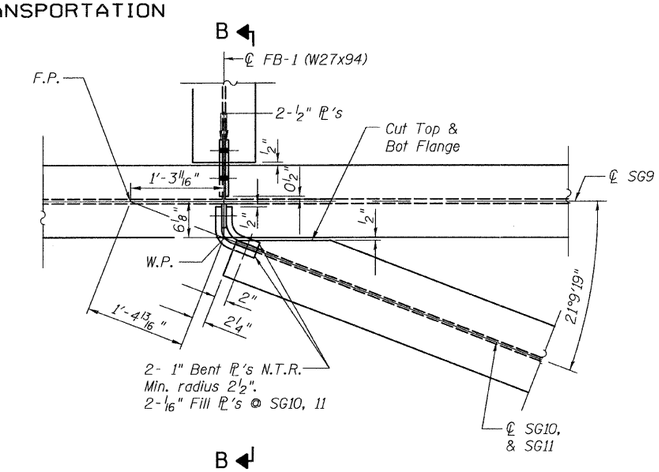

DETAIL 2

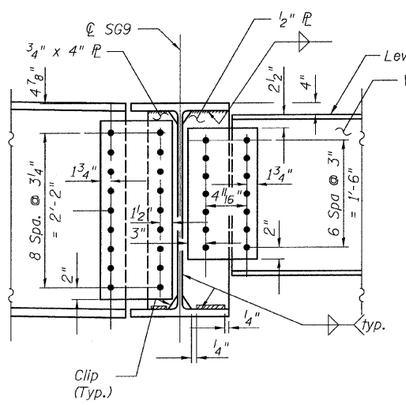

SECTION A-A

All bolts shall be 7/8" ϕ. Holes shall be 15/16" ϕ

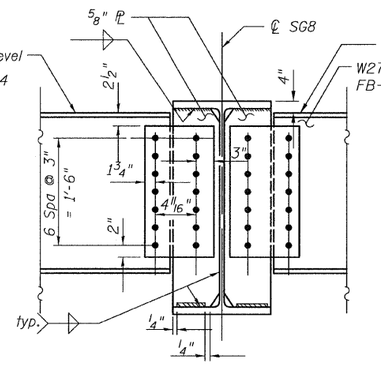

AT SG8

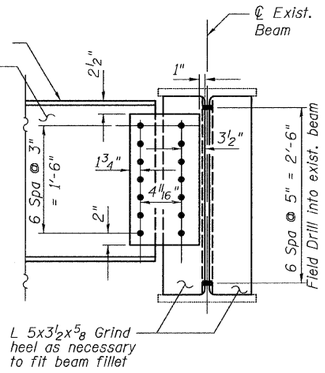

AT EXISTING BEAM

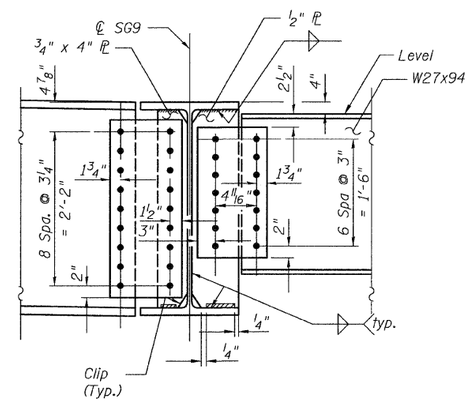

SECTION B-B

All bolts shall be 7/8" ϕ. Holes shall be 15/16" ϕ

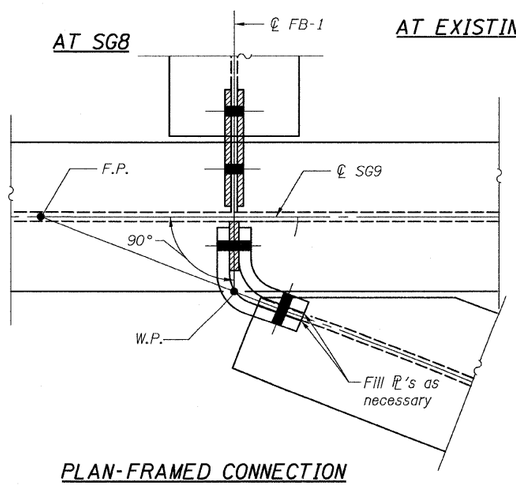

PLAN-FRAMED CONNECTION

NOTES:

1. Structural Steel shall conform to the requirement of AASHTO M270 Grade 50.
2. F.P. denotes Framing Point.
3. Load carrying components designated "NTR" shall conform to the Supplemental Requirements for Notch Toughness, Zone 2.
4. All Fillet Welds shall be 5/16".

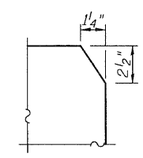

TYPICAL CLIPPING DETAIL

FRAMING DETAILS 2
CONNECTIONS - EAST
STRUCTURE NO. 016-3241

TY·LIN INTERNATIONAL

DESIGNED	- JMA	REVISIONS	
CHECKED	- AMD.	NAME	DATE
DRAWN	- JMA		
CHECKED	- AMD.		
DATE	- 08/02/10		

SHEET NO. 20
26 SHEETS

F.A.I RTE.	SECTION	COUNTY	TOTAL SHEETS	SHEET NO.
55	0711.2R & 1011.1BR	COOK	200	24
		CONTRACT NO. 60L39		
FED. ROAD DIST. NO. 1	ILLINOIS	FED. AID PROJECT		

4:31:47 PM
p:\01345\beam and bearing fabrication\155elframeat16.dgn
8/13/2010

STATE OF ILLINOIS
DEPARTMENT OF TRANSPORTATION

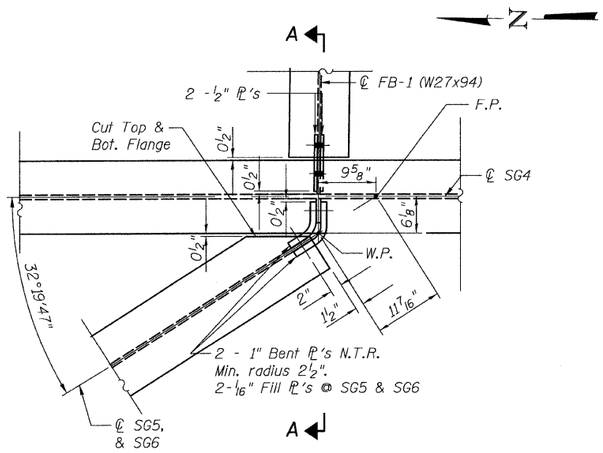

DETAIL 3

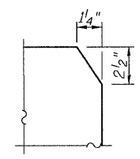

TYPICAL CLIPPING DETAIL

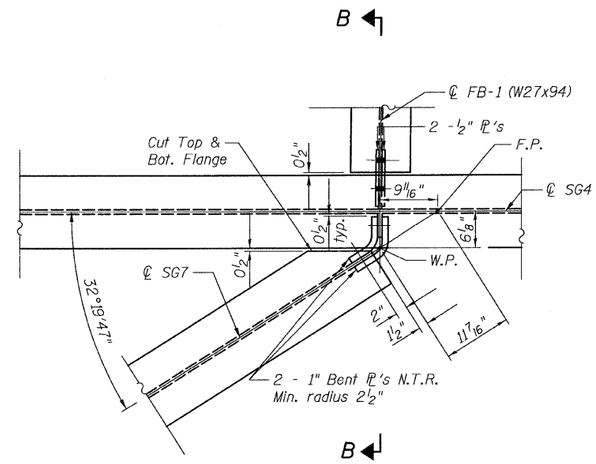

DETAIL 4

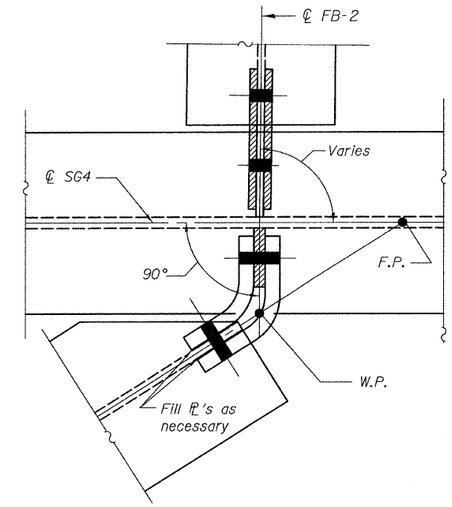

PLAN-FRAMED CONNECTION

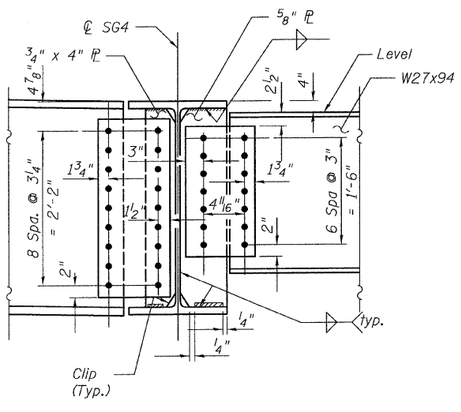

SECTION A-A

All bolts shall be 7/8" ϕ. Holes shall be 15/16" ϕ

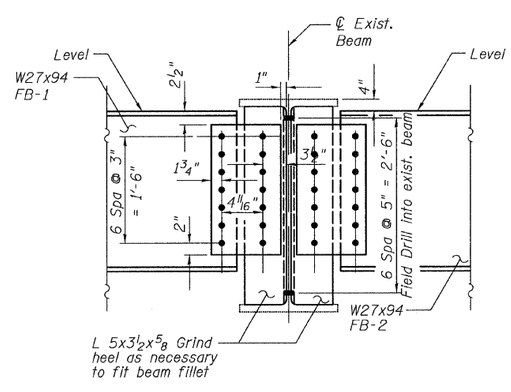

AT EXISTING BEAM

(G1 shown, G2 similar with exception of W27x94 on 1 side only)

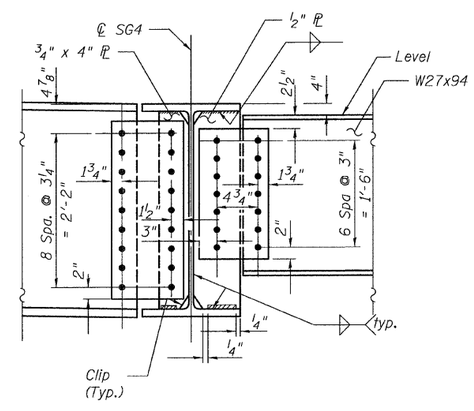

SECTION B-B

All bolts shall be 7/8" ϕ. Holes shall be 15/16" ϕ

NOTES:

1. Structural Steel shall conform to the requirement of AASHTO M270 Grade 50.
2. F.P. denotes Framing Point
3. Load carrying components designated "NTR" shall conform to the Supplemental Requirements for Notch Toughness, Zone 2.
4. All Fillet Welds shall be 5/16".

FRAMING DETAILS 3
CONNECTIONS - WEST
STRUCTURE NO. 016-3241

TYLIN INTERNATIONAL	DESIGNED - JMA	REVISIONS	
	CHECKED - AMD.	NAME	DATE
	DRAWN - JMA		
	CHECKED - AMD.		
	DATE - 08/02/10		

SHEET NO. 21	F.A.I RTE.	SECTION	COUNTY	TOTAL SHEETS	SHEET NO.
26 SHEETS	55	0711.2R & 1011.1BR	COOK	200	25
			CONTRACT NO. 60L39		
	FED. ROAD DIST. NO. 1	ILLINOIS	FED. AID PROJECT		

p:\01345\beam and bearing fabrication\155clframedt17.dgn 4:31:48 PM
8/13/2010
155clframedt17.dgn 8/13/2010 4:31:48 PM

STATE OF ILLINOIS
DEPARTMENT OF TRANSPORTATION

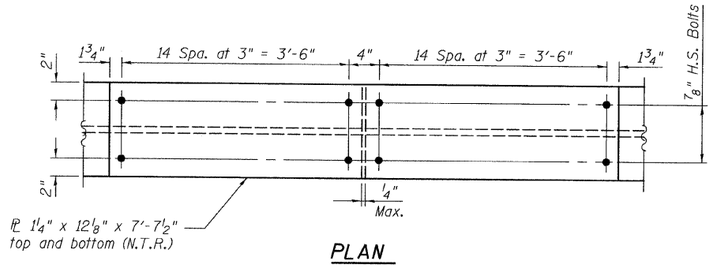

PLAN

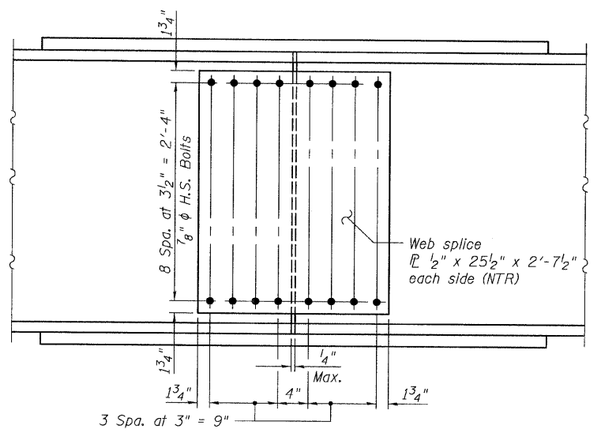

ELEVATION

SPLICE DETAIL
F.S. 1 THRU F.S. 4

Load carrying components designated "NTR" shall conform to the Supplemental Requirements for Notch Toughness, Zone 2.

FRAMING DETAILS 4
FIELD SPLICES
STRUCTURE NO. 016-3241

TYLIN INTERNATIONAL

DESIGNED	-	JMA	
CHECKED	-	AMD.	
DRAWN	-	JMA	
CHECKED	-	AMD.	
DATE	-	08/02/10	

REVISIONS	
NAME	DATE

SHEET NO. 22
26 SHEETS

F.A.I RTE.	SECTION	COUNTY	TOTAL SHEETS	SHEET NO.
55	0711.2R & 1011.1BR	COOK	200	26
		CONTRACT NO. 60L39		
FED. ROAD DIST. NO. 1	ILLINOIS	FED. AID PROJECT		

p:\01345\beam and bearing fabrication\55cframedt18.dgn 8/2/2010 2:41:54 PM

STATE OF ILLINOIS
DEPARTMENT OF TRANSPORTATION

TYPE I ELASTOMERIC EXP. BRG.

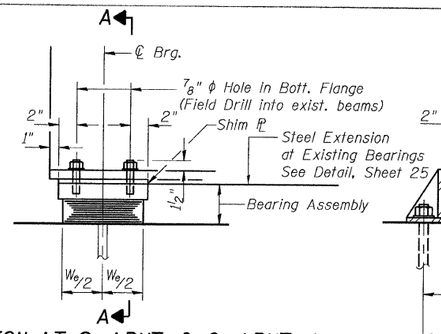

ELEVATION AT S. ABUT. & C. ABUT. 1

(Piers 2 & 4 similar)

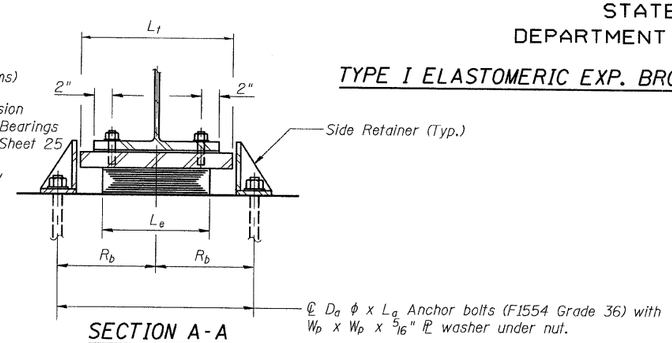

SECTION A-A

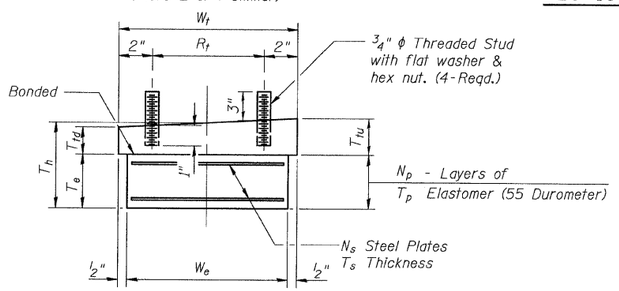

BEARING ASSEMBLY

Note: Shim plates shall not be placed under Bearing Assembly.

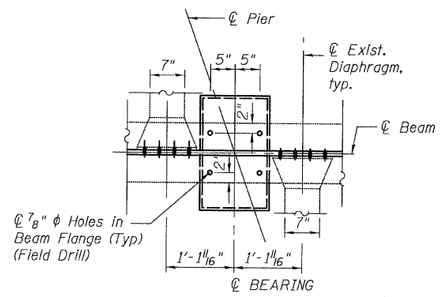

PLAN OF BEARING LAY-OUT PIERS 2 & 4

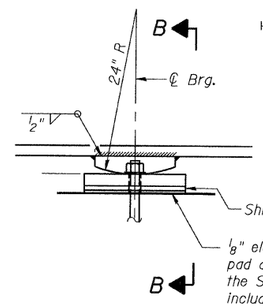

ELEVATION AT PIERS 1 AND 5

SECTION B-B

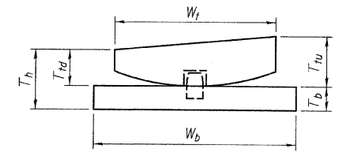

BEARING ASSEMBLY

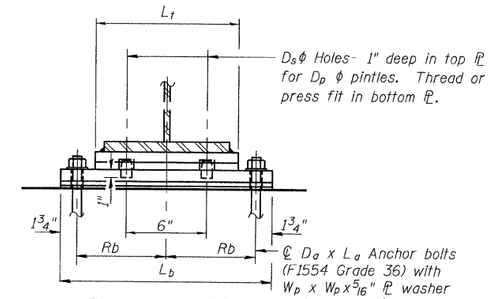

FIXED BEARING

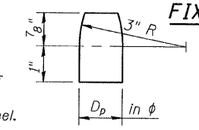

PINTLE

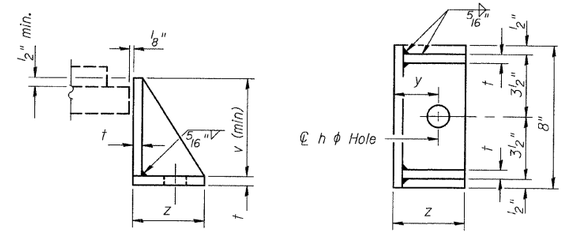

SIDE RETAINER

Equivalent rolled angle with stiffeners will be allowed in lieu of welded plates.

BILL OF MATERIAL

Item	Unit	Total
Furnishing Elastomeric Bearing Assembly Type I	Each	82

BEARING DIMENSION TABLE

(For Details of Type II Bearings, See Sheet 24)

* at ℄ Brg.

Bearing Location	Beams	Type	No. Req'd.	T_h* (in.)	Elastomer W_e (in.)	L_e (in.)	T_e (in.)	T_p (in.)	N_p	T_s (in.)	N_s	Top Plate W_t (in.)	L_t (in.)	T_{td} (in.)	T_{tu} (in.)	R_t (in.)	Bottom Plate W_b (in.)	L_b (in.)	T_b (in.)	Anchor Bolts D_a (in.)	L_a (in.)	R_b (in.)	H_b (in.)	W_p (in.)	Pintles D_p (in.)	D_s (in.)	Side Retainers y (in.)	z (in.)	t (in.)	h (in.)	v (in.)
South Abutment	1 THRU 16	I	16	3 15/16	9	12	2 1/4	3/8	5	3/32	4	10	14	1 1/2	1 7/8	6	-	-	-	1	12	9 1/4	-	2 1/4	-	-	2 1/8	4	1/2	1 1/4	4
South Abutment	SG1,SG2,SG3	I	3	3 15/16	9	12	2 1/4	3/8	5	3/32	4	10	14	1 1/2	1 7/8	6	-	-	-	1	12	9 1/4	-		-	-	2 1/8	4	1/2	1 1/4	4
Pier 1		Fix										Existing Fixed Bearings to Remain																			
Pier 1	SG1,SG2,SG3	Fix	3									9	13 1/2	1	1 3/8		9	21	1 3/8	1	12	8 3/4	1 1/2	2 1/4	1 1/4	1 3/8					
Piers 2	1 THRU 16	I	16	5 5/16	13	20	3 1/16	5/8	4	3/16	3	14	22	2 1/4	2 1/4	10	-	-	-	1	12	13 1/4	-	2 1/4	-	-	2 1/8	4	1/2	1 1/4	6
Piers 2	SG1,SG2,SG3	I	3	5 9/16	13	20	3 1/16	5/8	4	3/16	3	14	22	2 1/4	2 3/4	10	-	-	-	1	12	13 1/4	-	2 1/4	-	-	2 1/8	4	1/2	1 1/4	6
S. Brgs. Pier 3	1 THRU 16	II	16	6 13/16	9	12	4 1/16	3/8	7	3/32	6	10	14	1 1/2	1 1/8	6	10	22 1/4	1	1	12	9 1/4	1 1/2	2 1/4	-	-	2 1/8	4	1/2	1 1/4	6
S. Brgs. Pier 3	SG1,SG2,SG3	II	3	6 13/16	9	12	4 1/16	3/8	7	3/32	6	10	14	1 1/2	1 1/8	6	10	22 1/4	1	1	12	9 1/4	1 1/2	2 1/4	-	-	2 1/8	4	1/2	1 1/4	6
N. Brgs. Pier 3	1 THRU 16	II	16	6 13/16	9	12	4 1/16	3/8	7	3/32	6	10	14	1 1/2	1 1/8	6	10	22 1/4	1	1	12	9 1/4	1 1/2	2 1/4	-	-	2 1/8	4	1/2	1 1/4	6
N. Brgs. Pier 3	SG4,SG8,SG9	II	3	6 13/16	9	12	4 1/16	3/8	7	3/32	6	10	14	1 1/2	1 1/8	6	10	22 1/4	1	1	12	9 1/4	1 1/2	2 1/4	-	-	2 1/8	4	1/2	1 1/4	6
Pier 4	1 THRU 16	I	16	5 5/16	13	20	3 1/16	5/8	4	3/16	3	14	22	2 1/4	2 1/4	10	-	-	-	1	12	13 1/4	-	2 1/4	-	-	2 1/8	4	1/2	1 1/4	6
Pier 4	SG4,SG8,SG9	I	3	5 9/16	13	20	3 1/16	5/8	4	3/16	3	14	22	2 1/4	2 3/4	10	-	-	-	1	12	13 1/4	-	2 1/4	-	-	2 1/8	4	1/2	1 1/4	6
Pier 5		Fix										Existing Fixed Bearings to Remain																			
Pier 5	SG4,SG8,SG9	Fix	3									9	13 1/2	1 1/4	1 1/2		11 1/2	21	1 3/4	1	12	8 3/4	1 1/2	2 1/4	1 1/4	1 3/8					
C. Abut. S. Bearing	1 THRU 16	I	16	3 7/8	9	12	2 1/4	3/8	5	3/32	4	10	14	1 1/2	1 3/4	6	-	-	-	1	12	9 1/4	-	2 1/4	-	-	2 1/8	4	1/2	1 1/4	4
C. Abut. S. Bearing	SG4,SG8,SG9	I	3	4 9/16	10	14	2 11/16	7/16	5	1/8	4	11	16	1 3/4	2	7	-	-	-	1	12	10 1/4		2 1/4	-	-	2 1/8	4	1/2	1 1/4	4
C. Abut. S. Bearing	SG5,6,7,10,11,12	I	6	3 3/8	7	12	1 3/4	3/8	4	3/32	3	8	14	1 1/2	1 3/4	4	-	-	-	1	12	9 1/4	-	2 1/4	-	-	2 1/8	4	1/2	1 1/4	4

Notes:

Anchor bolts shall be ASTM F1554 all-thread (or an Engineer-approved alternate material) of the grade(s) and diameter(s) specified. ASTM A307 Grade C anchor bolts may be used in lieu of ASTM F1554 Grade 36 (Fy=36ksi). The corresponding specified grade of AASHTO M314 anchor bolts may be used in lieu of ASTM F1554.

Anchor bolts at fixed bearings may be either cast in place or installed in holes drilled after the supported member is in place.

Anchor bolts for side retainers may be cast in place or installed in holes drilled before or after members are in place.

Drilled and set anchor bolts shall be installed according to Article 521.06 of the Standard Specifications.

Side retainers and other steel members required for the bearing assembly shall be included in the cost of Furnishing Elastomeric Bearing Assembly, Type I.

The Structural Steel plates of the bearing assembly shall conform to the requirements of AASHTO M270 Grade 50.

Two 1/8" adjusting shims shall be provided for each bearing in addition to all other plates or shims and placed as shown on the bearing details.

ELASTOMERIC BEARINGS
TYPE 1
STRUCTURE NO. 016-3241

TY·LIN INTERNATIONAL

DESIGNED	-	JMA
CHECKED	-	AMD.
DRAWN	-	JMA
CHECKED	-	AMD.
DATE	-	08/02/10

REVISIONS

NAME	DATE

SHEET NO. 23
26 SHEETS

F.A.I RTE.	SECTION	COUNTY	TOTAL SHEETS	SHEET NO.
55	0711.2R & 1011.1BR	COOK	200	27
		CONTRACT NO. 60L39		

FED. ROAD DIST. NO. 1 | ILLINOIS | FED. AID PROJECT

8/2/2010

p:\01345\beam and bearing fabrication\155ctupel.dgn 2:41:55 PM

\\Pw\ttyuser1.dgn 8/2/2010 2:41:55 PM

STATE OF ILLINOIS
DEPARTMENT OF TRANSPORTATION

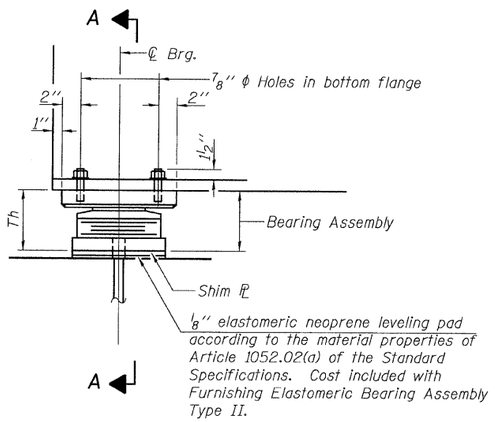

ELEVATION AT PIER 3

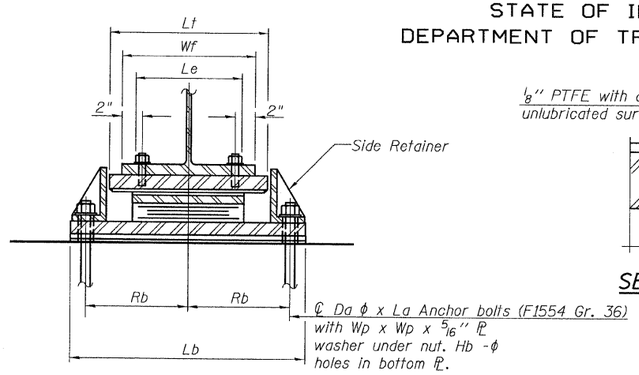

SECTION A-A

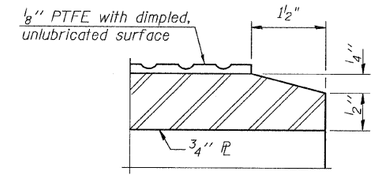

SECTION THRU PTFE

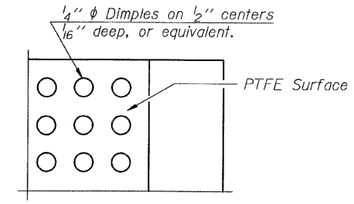

PLAN-PTFE SURFACE

Notes:

Anchor bolts shall be ASTM F1554 all-thread (or an Engineer-approved alternate material) of the grade(s) and diameter(s) specified. ASTM A307 Grade C anchor bolts may be used in lieu of ASTM F1554 Grade 36 (Fy=36ksi). The corresponding specified grade of AASHTO M314 anchor bolts may be used in lieu of ASTM F1554.

Anchor bolts for Type II bearings shall be placed in holes drilled in the concrete through holes in the bottom bearing plate after members are in place. Side retainers shall be placed after bolts are installed.

Drilled and set anchor bolts shall be installed according to Article 521.06 of the Standard Specifications.

Side retainers and other steel members required for the bearing assembly shall be included in the cost of Furnishing Elastomeric Bearing Assembly, Type II.

The 1/8" PTFE sheet shall be bonded directly to the top steel plate with a two-component, medium viscosity epoxy resin, conforming to the requirements of the Federal Specification MMM-A-134, Type I. The bond agent shall be applied on the full area of the contact surfaces.

Bonding of 1/8" PTFE sheet during vulcanizing process will be permitted provided the process and method of adjusting assembly height is approved by the Engineer.

The Structural Steel plates of the bearing assembly shall conform to the requirements of AASHTO M270 Grade 50.

Two 1/8" adjusting shims shall be provided for each bearing in addition to all other plates or shims and placed as shown on the bearing details.

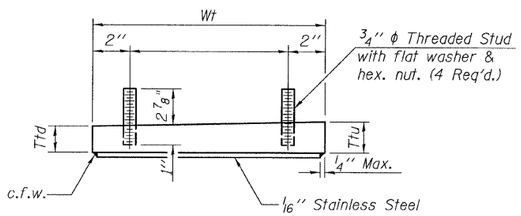

TOP BEARING ASSEMBLY

TYPE II ELASTOMERIC EXP. BRG.

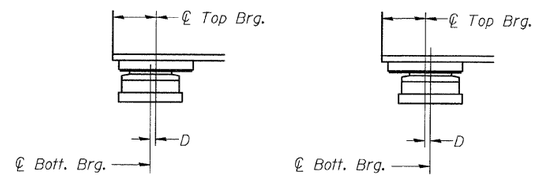

BELOW 50°F.
(Move bott. brg. away from fixed brg.)

ABOVE 50°F.
(Move bott. brg. toward fixed brg.)

SETTING ANCHOR BOLTS AT EXP. BRG.

D=1/8" per each 100' of expansion for every 15° temp. change from the normal temp. of 50°F.

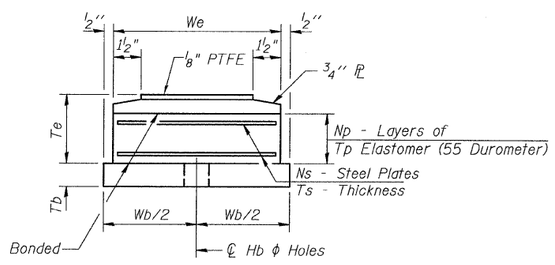

BOTTOM BEARING ASSEMBLY

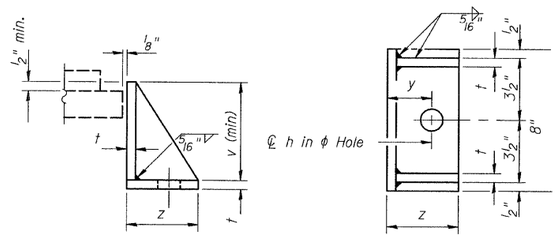

SIDE RETAINER

Equivalent rolled angle with stiffeners will be allowed in lieu of welded plates.

BILL OF MATERIAL

Item	Unit	Total
Furnishing Elastomeric Bearing Assembly Type II	Each	38

See Sheet 23 for Table of Dimensions.

ELASTOMERIC BEARINGS
TYPE 2
STRUCTURE NO. 016-3241

TYLIN INTERNATIONAL	DESIGNED - JMA	REVISIONS	
	CHECKED - AMD.	NAME	DATE
	DRAWN - JMA		
	CHECKED - AMD.		
	DATE - 08/02/10		

SHEET NO. 24
26 SHEETS

F.A.I RTE.	SECTION	COUNTY	TOTAL SHEETS	SHEET NO.
55	0711.2R & 1011.1BR	COOK	200	28
		CONTRACT NO. 60L39		
FED. ROAD DIST. NO. 1	ILLINOIS	FED. AID PROJECT		

p:\01345\beam and bearing fabrication\55ltype2.dgn 2:41:56 PM

8/2/2010

STATE OF ILLINOIS
DEPARTMENT OF TRANSPORTATION

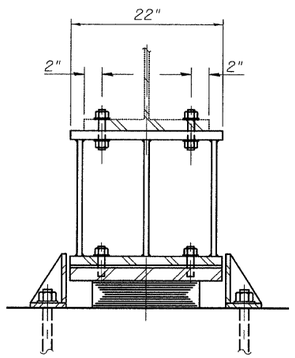

SECTION B-B

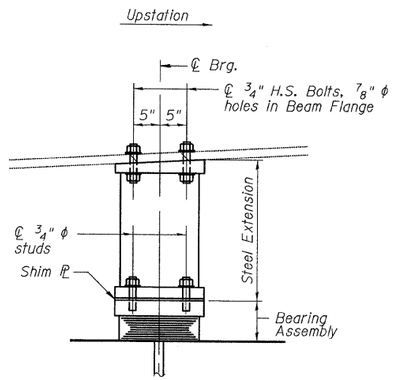

BEARING ELEVATION WITH STEEL EXTENSION

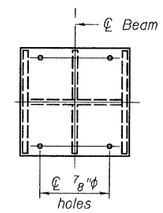

PLAN STEEL EXTENSION

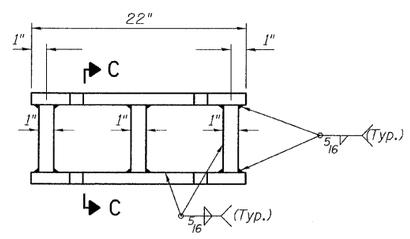

ELEVATION STEEL EXTENSION

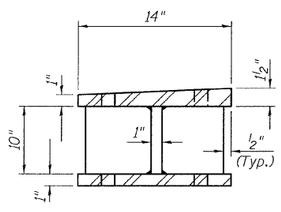

SECTION C-C

NOTES

The details shown on this sheet applies to the existing beams on Piers 2 and 4 only.

The Structural Steel plates shall conform to the requirements of AASHTO M270 Grade 50.

Prior to ordering any material, the Contractor shall verify in the field all bearing height and shim thickness dimensions.

Place 1/16" shim plate at each bearing, located as shown on this sheet.

Work this drawing with Sheet 23.

STEEL EXTENSION DETAILS
STRUCTURE NO. 016-3241

TY·LIN INTERNATIONAL

DESIGNED	- JMA	REVISIONS	
CHECKED	- AMD,	NAME	DATE
DRAWN	- JMA		
CHECKED	- AMD,		
DATE	- 08/02/10		

SHEET NO. 25
26 SHEETS

F.A.I RTE.	SECTION	COUNTY	TOTAL SHEETS	SHEET NO.
55	0711.2R & 1011.1BR	COOK	200	29
		CONTRACT NO. 60L39		
FED. ROAD DIST. NO. 1	ILLINOIS	FED. AID PROJECT		

p:\01345\beam and bearing fabrication\i55clbearings.dgn 2:41:57 PM 8/2/2010

STATE OF ILLINOIS
DEPARTMENT OF TRANSPORTATION

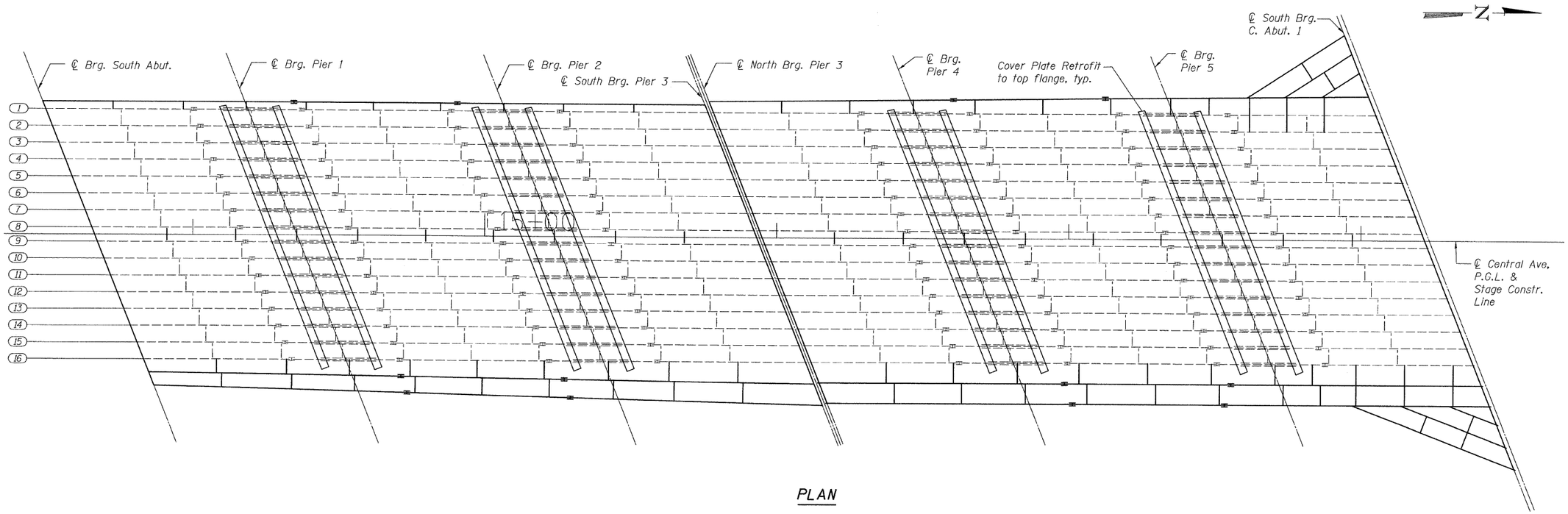

PLAN

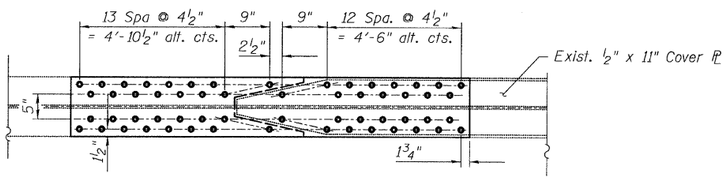

PLAN

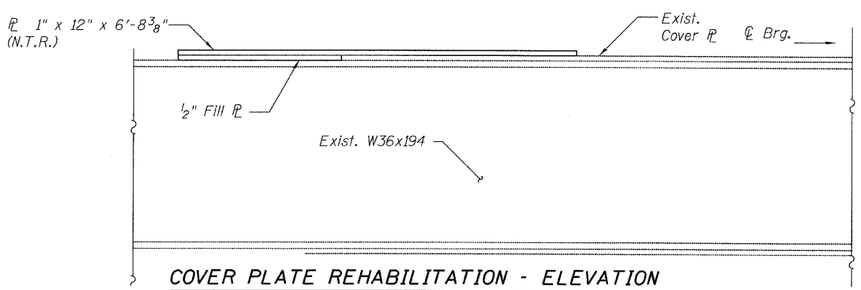

COVER PLATE REHABILITATION - ELEVATION

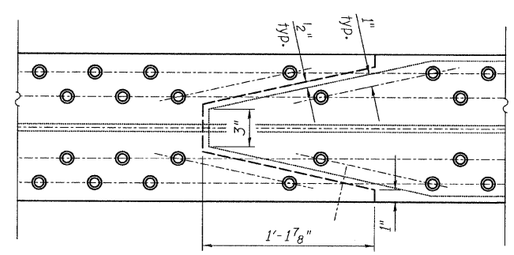

CLEARANCE DETAIL

NOTES:

Structural Steel shall conform to the requirements of AASHTO M270 Grade 50.

Load carrying components designated "NTR" shall conform to the Supplemental Requirements for Notch Toughness, Zone 2.

COVER PLATE RETROFIT
STRUCTURE NO. 016-3241

TYLIN INTERNATIONAL

DESIGNED - SP	REVISIONS	
CHECKED - AMD,	NAME	DATE
DRAWN - SP		
CHECKED - AMD,		
DATE - 08/02/10		

SHEET NO. 26
26 SHEETS

F.A.I RTE.	SECTION	COUNTY	TOTAL SHEETS	SHEET NO.
55	0711.2R & 1011.1BR	COOK	200	30
		CONTRACT NO. 60L39		
FED. ROAD DIST. NO. 1	ILLINOIS	FED. AID PROJECT		

p:\01345\beam end bearing fabrication\55cl_backing.dgn 8/2/2010 2:41:59 PM

STATE OF ILLINOIS
DEPARTMENT OF TRANSPORTATION

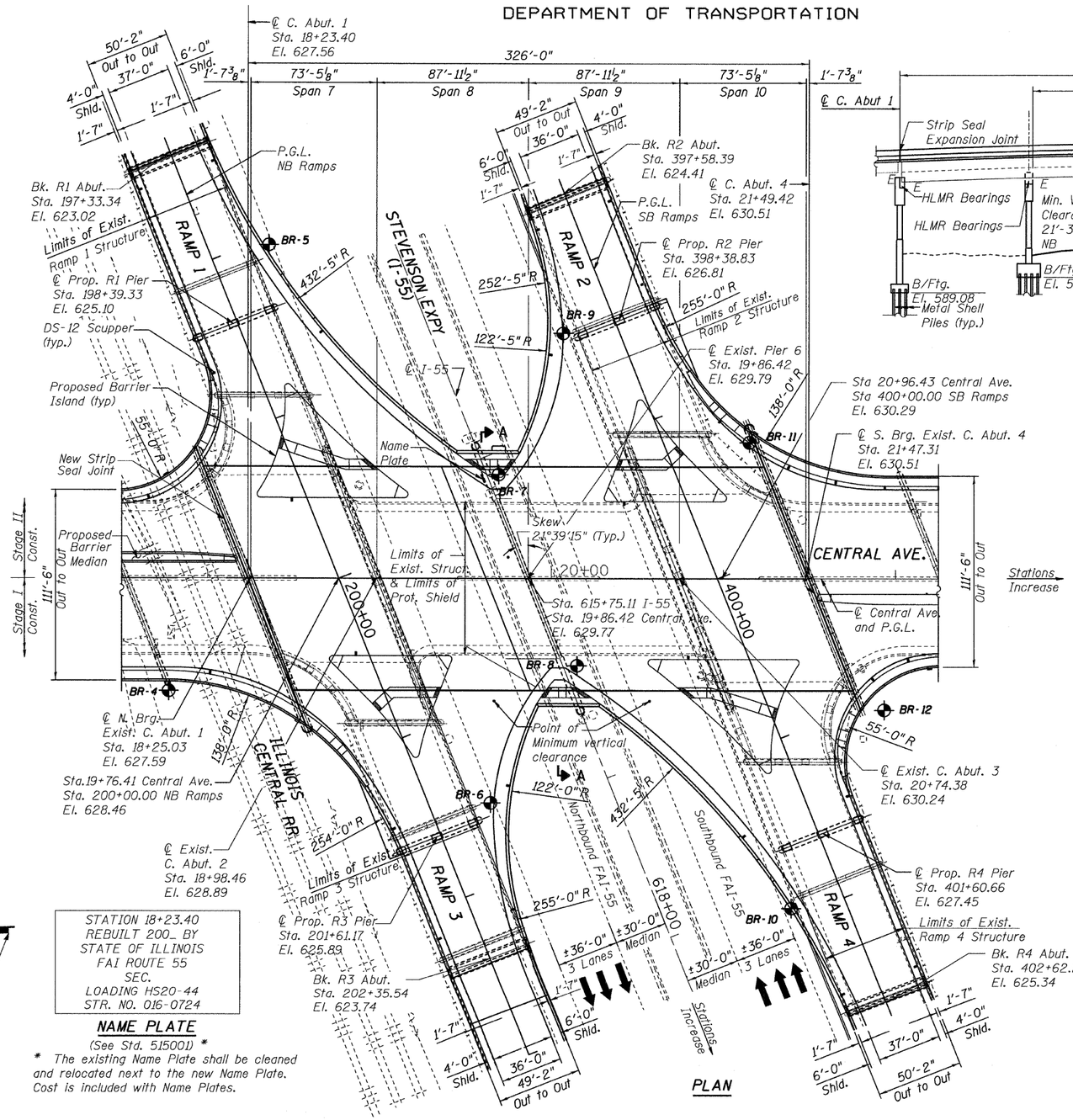

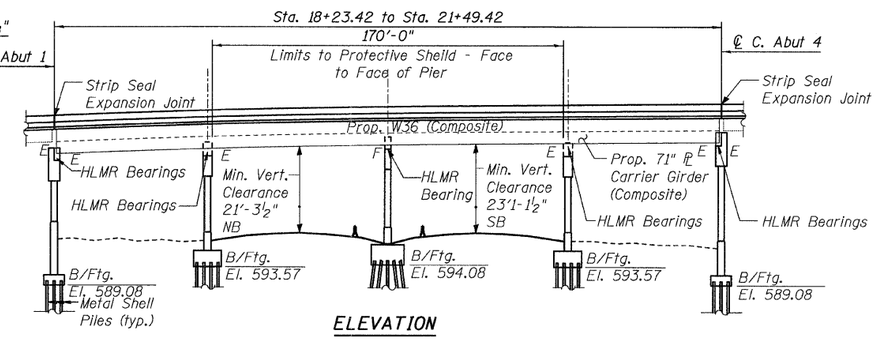

ELEVATION

LEGEND

Boring Location

BORING LOCATIONS

No.	Station	**Offset
BR-4	17+77.4	65.6' RT
BR-5	18+35.7	194.7' LT
BR-6	19+64.7	130.8' RT
BR-7	19+69.2	60.7' LT
BR-8	20+14.9	50.8' RT
BR-9	20+06.8	143.2' LT
BR-10	21+39.5	192.4' RT
BR-11	21+15.0	79.3' LT
BR-12	21+93.5	76.6' RT

** Offset from ℄ Central Avenue

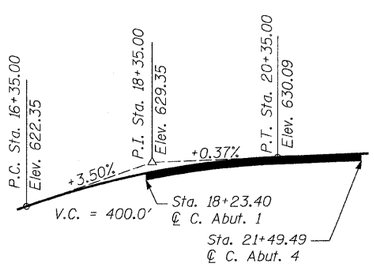

PROFILE GRADE CENTRAL AVE.

STATION 18+23.40
REBUILT 200_ BY
STATE OF ILLINOIS
FAI ROUTE 55
SEC.
LOADING HS20-44
STR. NO. 016-0724

NAME PLATE
(See Std. 515001) *

* The existing Name Plate shall be cleaned and relocated next to the new Name Plate. Cost is included with Name Plates.

PLAN

SCOPE OF WORK (MAIN LINE)

- Widen the existing Superstructure and Substructure.
- Remove and replace the Existing Deck with a 8" Deck.
- Remove the Existing Superstructure (Steel Stringers).
- Remove and replace above the Crashwall and widen C. Abutments 1 and 4.
- Remove and replace C. Abutments 2 and 3.
- Remove & replace pier cap & widen Pier 6.
- Perform Formed Concrete Repairs on Piers to remain.
- Install new bearings.
- Installation of new Structural Steel.
- Remove and replace the Drainage System.

NOTES:

1. No deck drains will be permitted in the span over
2. tracks or within 10 ft of cross arms of a railroad pole line.
3. For enlarged General Plans and Elevations of Ramp Structures, See Sheets 4 thru 7.

STATE OF ILLINOIS
ANNA M. DUKES
081-005598
CHICAGO, ILLINOIS
LICENSED STRUCTURAL ENGINEER

Signed Anna M. Dukes
Anna M. Dukes, S.E. Il. Lic. No. 081-005598
Expires 11-30-2010.
Date 08/06/2010

APPROVED
FOR STRUCTURAL ADEQUACY ONLY
Ralph E. Anderson
ENGINEER OF BRIDGES AND STRUCTURES

GENERAL PLAN AND ELEV.
CENTRAL/I-55
STRUCTURE NO. 016-0724

TYLIN INTERNATIONAL

DESIGNED	JMA
CHECKED	AMD.
DRAWN	JMA
CHECKED	AMD.
DATE	08/02/10

REVISIONS	
NAME	DATE

SHEET NO. 1
137 SHEETS

F.A.I RTE.	SECTION	COUNTY	TOTAL SHEETS	SHEET NO.
55	0711.2R & 1011.1BR	COOK	200	31
		CONTRACT NO. 60L39		
FED. ROAD DIST. NO. 1	ILLINOIS	FED. AID PROJECT		

p:\01345\beam and bearing fabrication\i55c2gpe.dgn 4:56:34 PM 8/5/2010

STATE OF ILLINOIS
DEPARTMENT OF TRANSPORTATION

GENERAL NOTES

1. Fasteners shall be AASHTO M164 Type 1, mechanically galvanized bolts. Bolts $\frac{7}{8}$ in. ϕ, holes $\frac{15}{16}$ in. ϕ, unless otherwise noted.

2. Calculated weight of Structural Steel =
   Grade 50 = 4,418,700 lbs.
   Grade 36 = 405,950 lbs.

3. The Organic Zinc Rich Primer/Epoxy/Urethane paint system shall be used for painting of new structural steel except where otherwise noted. The entire system shall be shop applied, with the exception that the exterior surfaces and bottom of the bottom flange of the fascia beams, masked off connection surfaces, and field installed fasteners, all of which shall be touched up and finish coated in the field. The color of the final finish coat for all interior steel surfaces shall be gray, Munsell No. 5B 7/1. The color of the final finish coat for the exterior and bottom flange of the fascia beams shall be Reddish Brown - Munsell No 2.5YR 3/4. See Special Provision for "Cleaning and Painting New Metal Structures".

4. The structural steel plates of the Bearing Assembly shall conform to the requirements of AASHTO M 270 Grade 50.

5. Materials, fabrication welding, and non-destructive testing for the members identified as Fracture Critical Member and member components (F.C.M.) in the contract plans shall conform to the requirements of Section 12 of the current ANSI / AASHTO / AWS / D 1.5 Bridge Welding Code.

6. Plan dimensions and details relative to existing plans are subject to nominal construction variations. The Contractor shall field verify existing dimensions and details affecting new construction and make necessary approved adjustments prior to construction or ordering of materials. Such variations shall not be cause for additional compensation for a change in scope of the work, however, the Contractor will be paid for the quantity actually furnished at the unit price bid for the work.

FABRICATION AND SHOP ASSEMBLY

1. The steel girders are to be supported during shop assembly at all falsework locations shown in the Framing Key Plan and Shoring Layout. The support locations shall be held at locations shown, except for minor adjustments to provide clearance for splices and connections. Any locations requiring adjustment over 5 feet shall be approved by the Engineer. If any support needs adjustment over 5 feet, alternate dual supports on either side of the subject locations may be considered.

2. Structure units or portions thereof, as described below shall be assembled together in the shop with all beams and/or girders across the entire deck cross-section including all floor beams, cross-frames, diaphragms, splices and connections. Such additional shop assembly work, performed according to the requirements specified herein, shall be paid for as part of the item FURNISHING STRUCTURAL STEEL.

   Ramp 1: Complete steel framing for the flared portion of Ramp 1 between the Abutment and the fascia girder G22, including the fascia girder and all beams, girders, cross-heads, floor beams, cross-frames, diaphragms, splices and connections.

   Ramp 2: Complete steel framing for the flared portion of Ramp 2 between the Abutment and the fascia girder G22, including the fascia girder and all beams, girders, cross-heads, floor beams, cross-frames, diaphragms, splices and connections.

   Ramp 3: Complete steel framing for the flared portion of Ramp 3 between the Abutment and the fascia girder G1, including the fascia girder and all beams, girders, cross-heads, floor beams, cross-frames, diaphragms, splices and connections.

   Ramp 4: Complete steel framing for the flared portion of Ramp 4 between the Abutment and the fascia girder G1, including the fascia girder and all beams, girders, cross-heads, floor beams, cross-frames, diaphragms, splices and connections.

FABRICATION AND SHOP ASSEMBLY CONT'D

3. The framing designated for complete shop assembly shall be shop assembled over properly designed supports at the permanent support locations, such as piers, and at the temporary falsework supports locations as shown in the contract plans. Falsework supports shall be designed to adequately support the weight of steel framing and other construction loads. The steel shall be assembled such that the relative elevations of the beams and girders are the same as for field erection. The supports shall be designed considering the actual support conditions and levels/elevations. The supports shall have provisions for vertical adjustment of the girders. Individual girders shall be temporarily blocked or braced as required to provide lateral and torsional stability during the assembly procedure.

4. The shop assembly shall be extended until all members and components of a particular shop assembly unit are fully assembled. All parts of each continuous member shall be assembled, pinned, and firmly drawn together with temporary bolts before reaming or tightening of fasteners is commenced. For shop assembly purposes, bolted splices and connections shall only be snug tightened and are not required to be fully torqued. The bolt holes in girder splices and the connections of the ramp girders to the fascia girders shall be either subpunched or subdrilled, and reamed full size during shop assembly. Assembled framing for each unit shall not be disassembled until after shop inspection has been made by the Engineer.

5. The Contractor shall submit for Engineer's review complete fabrication and shop assembly plan and procedures. The submittal shall include, but not be limited to, geometric controls, support locations and details, and sequence of member erection and bolt tightening. The Engineer's review of such plan and procedures shall include review by the Department's Bureau of Bridges and Structures. The Contractor's shop assembly plan and procedures shall be sealed and signed by a Structural Engineer licensed in the State of Illinois. Engineer's approval of such plans and procedures does not relieve the Contractor of any responsibility.

TOTAL BILL OF MATERIAL

ITEM	UNIT	MAINLINE SUPER	MAINLINE SUB	MAINLINE TOTAL
			-	
FURNISHING STRUCTURAL STEEL	L SUM	0.81	-	0.81
SHOP ASSEMBLY, RAMP 1	L SUM	1	-	1
SHOP ASSEMBLY, RAMP 2	L SUM	1	-	1
SHOP ASSEMBLY, RAMP 3	L SUM	1	-	1
SHOP ASSEMBLY, RAMP 4	L SUM	1	-	1
FURNISHING MODULAR EXPANSION JOINT-SWIVEL 6"	FOOT	186	-	186
FURNISHING HIGH LOAD MULTI-ROTATIONAL BEARINGS, FIXED, 250K	EACH	20	-	20
FURNISHING HIGH LOAD MULTI-ROTATIONAL BEARINGS, FIXED, 500K	EACH	2	-	2
FURNISHING HIGH LOAD MULTI-ROTATIONAL BEARINGS, GUIDED EXPANSION, 150K	EACH	40	-	40
FURNISHING HIGH LOAD MULTI-ROTATIONAL BEARINGS, GUIDED EXPANSION, 250K	EACH	40	-	40
FURNISHING HIGH LOAD MULTI-ROTATIONAL BEARINGS, GUIDED EXPANSION, 350K	EACH	4	-	4
FURNISHING HIGH LOAD MULTI-ROTATIONAL BEARINGS, GUIDED EXPANSION, 900K	EACH	4	-	4
FURNISHING HIGH LOAD MULTI-ROTATIONAL BEARINGS, NON-GUIDED EXPANSION, 150K	EACH	34	-	34
FURNISHING HIGH LOAD MULTI-ROTATIONAL BEARINGS, NON-GUIDED EXPANSION, 800K	EACH	4	-	4
FURNISHING HIGH LOAD MULTI-ROTATIONAL BEARINGS, NON-GUIDED EXPANSION, 1500K	EACH	4	-	4
FIELD MEASUREMENTS	L SUM	0.34	-	0.34
STORAGE OF STRUCTURAL STEEL	CAL DA	60		60
STORAGE OF HIGH LOAD MULTI-ROTATIONAL BEARINGS	CAL DA	60		60
STORAGE OF MODULAR EXPANSION JOINTS	CAL DA	60		60

GENERAL NOTES &
BILL OF MATERIAL
STRUCTURE NO. 016-0724

TY·LIN INTERNATIONAL

DESIGNED -	EKH, PK
CHECKED -	AMD,
DRAWN -	EKH, JMA
CHECKED -	AMD,
DATE -	08/02/10

REVISIONS	
NAME	DATE

SHEET NO. 2
137 SHEETS

F.A.I RTE.	SECTION	COUNTY	TOTAL SHEETS	SHEET NO.
55	0711.2R & 1011.1BR	COOK	200	32
		CONTRACT NO. 60L39		
FED. ROAD DIST. NO. 1	ILLINOIS	FED. AID PROJECT		

p:\01345\beam and bearing fabrication\55c2genotbom.dgn 1:05:52 PM 8/11/2010

STATE OF ILLINOIS
DEPARTMENT OF TRANSPORTATION

INDEX OF SHEETS

1 GENERAL PLAN AND ELEV.- CENTRAL/I-55
2 GEN. NOTES & BILL OF MATER. - CENTRAL/I-55
3 INDEX OF SHEETS - CENTRAL/I-55
4 GENERAL PLAN AND ELEVATION - RAMP 1
5 GENERAL PLAN AND ELEVATION - RAMP 2
6 GENERAL PLAN AND ELEVATION - RAMP 3
7 GENERAL PLAN AND ELEVATION - RAMP 4
8 STAGE I CONSTRUCTION - CENTRAL/I-55
9 STAGE II CONSTRUCTION - CENTRAL/I-55
10 TOP OF SLAB ELEVATIONS LAYOUT - CENSTRAL/I-55
11 TOP OF SLAB ELEVATIONS LAYOUT - RAMP 1 FLARE
12 TOP OF SLAB ELEVATIONS LAYOUT - RAMP 2 FLARE
13 TOP OF SLAB ELEVATIONS LAYOUT - RAMP 3 FLARE
14 TOP OF SLAB ELEVATIONS LAYOUT - RAMP 4 FLARE
15 TOP OF SLAB ELEV. - 1 CENTRAL/I-55
16 TOP OF SLAB ELEV. - 2 CENTRAL/I-55
17 TOP OF SLAB ELEV. - 3 CENTRAL/I-55
18 TOP OF SLAB ELEV. - 4 CENTRAL/I-55
19 TOP OF SLAB ELEV. - 5 CENTRAL/I-55
20 TOP OF SLAB ELEV. - 6 CENTRAL/I-55
21 TOP OF SLAB ELEV. - 1 RAMP 1 FLARE
22 TOP OF SLAB ELEV. - 2 RAMP 1 FLARE
23 TOP OF SLAB ELEV. - 1 RAMP 2 FLARE
24 TOP OF SLAB ELEV. - 2 RAMP 2 FLARE
25 TOP OF SLAB ELEV. - 1 RAMP 3 FLARE
26 TOP OF SLAB ELEV. - 2 RAMP 3 FLARE
27 TOP OF SLAB ELEV. - 1 RAMP 4 FLARE
28 TOP OF SLAB ELEV. - 2 RAMP 4 FLARE
29 SUPERSTRUCTURE KEY PLAN - CENTRAL/I-55
30 SUPERST. CROSS SECTION - CENTRAL/I-55
31 CROSS SECTIONS & DETAILS - RAMP 1 FLARE
32 CROSS SECTIONS & DETAILS - RAMP 2 FLARE
33 CROSS SECTIONS & DETAILS - RAMP 3 FLARE
34 CROSS SECTIONS & DETAILS - RAMP 4 FLARE
35 RAMPS 1 AND 4 MODULAR EXPANSION JOINT DETAILS AT PIER 3
36 RAMP 2 AND 3 MODULAR EXPANSION JOINT DETAILS AT PIER 3
37 FRAMING KEY PLAN - CENTRAL/I-55
38 FRAMING SHORING PLAN PHASE I
39 FRAMING SHORING PLAN PHASE II
40 FRAMING PLAN - CENTRAL/I-55
41 FRAMING PLAN - RAMP 1 FLARE
42 FRAMING PLAN - RAMP 2 FLARE
43 FRAMING PLAN - RAMP 3 FLARE
44 FRAMING PLAN - RAMP 4 FLARE
45 MOMENT & REACTION TABLES - CENTRAL/I-55
46 GIRDER G1 - ELEVATION - CENTRAL/I-55
47 GIRDER G22 - ELEVATION - CENTRAL/I-56
48 GIRDER G2 - ELEVATION - CENTRAL/I-55
49 GIRDER G21 - ELEVATION - CENTRAL/I-56
50 GIRDER G3/20 - ELEVATION - CENTRAL/I-55
51 GIRDERS G4 THRU G19 - ELEVATIONS - CENTRAL/I-55
52 FIELD SPLICES - CENTRAL/I-55
53 FIELD SPLICE 3 & CONNECTION DETAILS- CENTRAL/I-55
54 CROSS FRAMES & DIAPHRAGMS - CENTRAL/I-55
55 MOMENT TABLE 1 - RAMP 1 FLARE
56 MOMENT TABLE 2 - RAMP 1 FLARE
57 GIRDER ELEVATIONS 1 - RAMP 1 FLARE
58 GIRDER ELEVATIONS 2 - RAMP 1 FLARE
59 GIRDER ELEVATIONS 3 - RAMP 1 FLARE
60 GIRDER ELEVATIONS 4 - RAMP 1 FLARE
61 GIRDER ELEVATIONS 5 - RAMP 1 FLARE
62 GIRDER ELEVATIONS 6 - RAMP 1 FLARE
63 CROSSHEAD GIRDER DETAILS - RAMP 1 FLARE
64 FLOOR BEAM DETAILS - RAMP 1 FLARE
65 CONNECTION DETAILS 1 & 2 - RAMP 1 FLARE
66 CONNECTION DETAILS 3 & 4 - RAMP 1 FLARE
67 CONNECTION DETAILS 5 & 6 - RAMP 1 FLARE
68 CONNECTION DETAILS 7 & 8 - RAMP 1 FLARE
69 CONNECTION DETAILS 9 & 10- RAMP 1 FLARE
70 CONNECTION DETAILS 11 & 12 - RAMP 1 FLARE
71 CONNECTION DETAILS 13 & 14 - RAMP 1 FLARE
72 CONNECTION DETAILS 15 & 16 - RAMP 1 FLARE
72A CONNECTION DETAILS 17, 18 & 19 - RAMP 1 FLARE
73 FIELD SPLICES - RAMP 1 FLARE
74 DIAPHRAGMS & DETAILS - RAMP 1 FLARE
75 MOMENT TABLE - RAMP 2 FLARE
76 STEEL ELEVATIONS - RAMP 2 FLARE
77 GIRDER ELEVATIONS 1 - RAMP 2 FLARE
78 GIRDER ELEVATIONS 2 - RAMP 2 FLARE
79 GIRDER ELEVATIONS 3 - RAMP 2 FLARE
80 GIRDER ELEVATIONS 4 - RAMP 2 FLARE
81 CROSSHEAD DETAILS - RAMP 2 FLARE
82 FLOOR BEAM DETAILS - RAMP 2 FLARE
83 CONNECTION DETAILS 20 & 21 - RAMP 2 FLARE
84 CONNECTION DETAILS 22 & 23 - RAMP 2 FLARE
85 CONNECTION DETAIL 24 - RAMP 2 FLARE
86 CONNECTION DETAILS 25 & 26 - RAMP 2 FLARE
87 CONNECTION DETAILS 27, 28 & 29 - RAMP 2 FLARE
88 CONNECTION DETAILS 30 & 31 - RAMP 2 FLARE
89 CONNECTION DETAIL 32 - RAMP 2 FLARE
90 CONNECTION DETAIL 33 - RAMP 2 FLARE
91 CONNECTION DETAIL 34 - RAMP 2 FLARE
92 FIELD SPLICES - RAMP 2 FLARE
93 DIAPHRAGMS & DETAILS - RAMP 2 FLARE
94 MOMENT TABLE - RAMP 3 FLARE
95 STEEL ELEVATIONS - RAMP 3 FLARE
96 GIRDER ELEVATIONS 1 - RAMP 3 FLARE
97 GIRDER ELEVATIONS 2 - RAMP 3 FLARE
98 GIRDER ELEVATIONS 3 - RAMP 3 FLARE
99 GIRDER ELEVATIONS 4 - RAMP 3 FLARE
100 CROSSHEAD DETAILS - RAMP 3 FLARE
101 FLOOR BEAM DETAILS - RAMP 3 FLARE
102 CONNECTION DETAIL 20 & 21 - RAMP 3 FLARE
103 CONNECTION DETAILS 22 & 23 - RAMP 3 FLARE
104 CONNECTION DETAIL 24 - RAMP 3 FLARE
105 CONNECTION DETAILS 25 & 26 - RAMP 3 FLARE
106 CONNECTION DETAILS 27, 28 & 29 - RAMP 3 FLARE
107 CONNECTION DETAILS 30 & 31 - RAMP 3 FLARE
108 CONNECTION DETAIL 32 - RAMP 3 FLARE
109 CONNECTION DETAILS 33 - RAMP 3 FLARE
110 CONNECTION DETAIL 34 - RAMP 3 FLARE
111 FIELD SPLICES - RAMP 3 FLARE
112 DIAPHRAGMS & DETAILS - RAMP 3 FLARE
113 MOMENT TABLE 1 - RAMP 4 FLARE
114 MOMENT TABLE 2 - RAMP 4 FLARE
115 GIRDER ELEVATIONS 1 - RAMP 4 FLARE
116 GIRDER ELEVATIONS 2 - RAMP 4 FLARE
117 GIRDER ELEVATIONS 3 - RAMP 4 FLARE
118 GIRDER ELEVATIONS 4 - RAMP 4 FLARE
119 GIRDER ELEVATIONS 5 - RAMP 4 FLARE
120 GIRDER ELEVATIONS 6 - RAMP 4 FLARE
121 CROSSHEAD GIRDER DETAILS - RAMP 4 FLARE
122 FLOOR BEAM DETAILS - RAMP 4 FLARE
123 CONNECTION DETAILS 1 & 2 - RAMP 4 FLARE
124 CONNECTION DETAILS 3 & 4 - RAMP 4 FLARE
125 CONNECTION DETAILS 5 & 6 - RAMP 4 FLARE
126 CONNECTION DETAILS 7 & 8 - RAMP 4 FLARE
127 CONNECTION DETAILS 9 & 10- RAMP 4 FLARE
128 CONNECTION DETAILS 11 & 12 - RAMP 4 FLARE
129 CONNECTION DETAILS 13 & 14 - RAMP 4 FLARE
130 CONNECTION DETAILS 15 & 16 - RAMP 4 FLARE
130A CONNECTION DETAILS 17, 18 & 19 - RAMP 4 FLARE
131 FIELD SPLICES - RAMP 4 FLARE
132 DIAPHRAGMS & DETAILS - RAMP 4 FLARE
133 NOT USED
134 NOT USED
135 HIGH LOAD MULTI-ROTATIONAL BEARINGS NON-GUIDED EXPANSION
136 HIGH LOAD MULTI-ROTATIONAL BEARINGS GUIDED EXPANSION
137 HIGH LOAD MULTI-ROTATIONAL BEARINGS FIXED

STRUCTURE NO. 016-0724

TY·LIN INTERNATIONAL

DESIGNED	-	EMK
CHECKED	-	AMD,
DRAWN	-	EMK
CHECKED	-	AMD,
DATE	-	08/02/10

REVISIONS	
NAME	DATE

SHEET NO. 3
137 SHEETS

F.A.I RTE.	SECTION	COUNTY	TOTAL SHEETS	SHEET NO.
55	0711.2R & 1011.1BR	COOK	200	33
		CONTRACT NO. 60L39		
FED. ROAD DIST. NO. 1	ILLINOIS	FED. AID PROJECT		

8/5/2010

p:\01345\beam and bearing fabrication\I55c2index.dgn 6:11:59 PM

\\RAC\index.dgn 8/6/2010 6:11:59 PM

STATE OF ILLINOIS
DEPARTMENT OF TRANSPORTATION

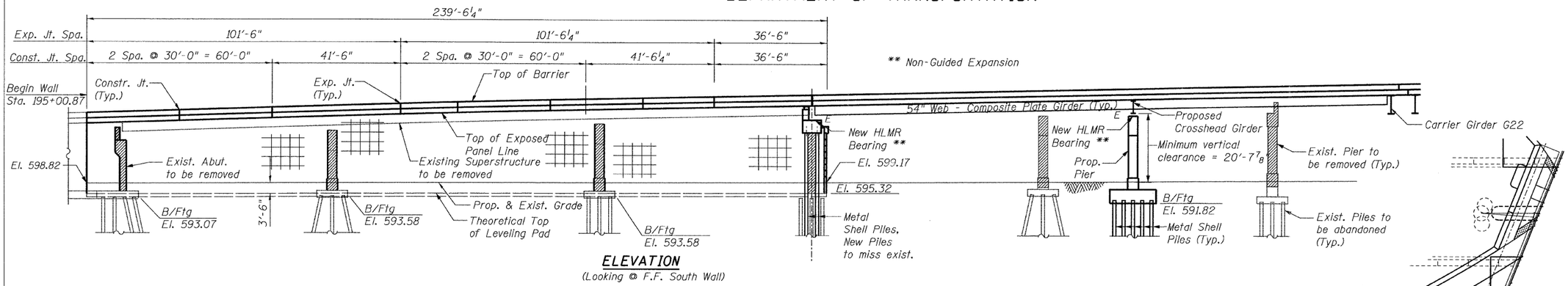

ELEVATION
(Looking @ F.F. South Wall)

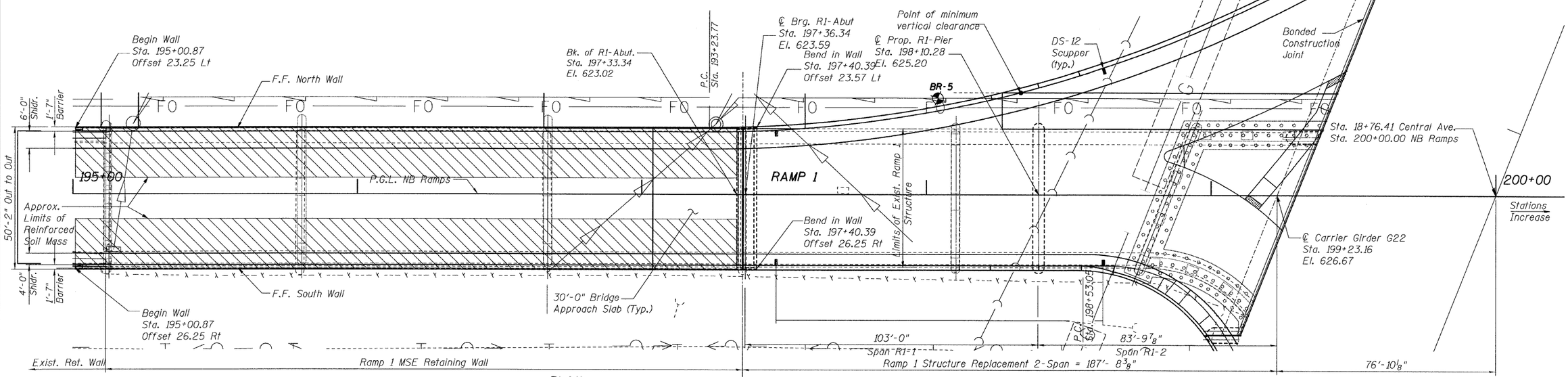

PLAN

BORING LOCATIONS

No.	Station	*Offset
BR-5	198+04.0	33.9' LT

* Offset from PGL NB Ramps

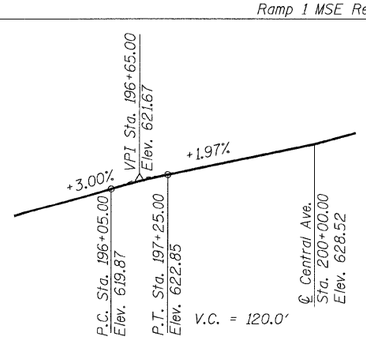

NB RAMPS PROFILE GRADE

SCOPE OF WORK

Spans 1 to 3
- Remove and replace the existing structure with Mechanically Stabilized Earth Retaing Walls.

Spans 4 and 5 (New Spans R1-1 & R1-2)
- Remove Existing deck and Structural Steel.
- Remove Piers 4 and 5.
- Construct R1-Pier
- Construct new Superstructure

LEGEND

✦ Boring Location

Notes:

1. Wall stations and offsets are given to the front face of the precast concrete wall panels, and are measured from the NB Ramps Baseline

GENERAL PLAN AND ELEVATION - RAMP 1
STRUCTURE NO. 016-0724

TYLIN INTERNATIONAL

DESIGNED	-	JMA
CHECKED	-	AMD,
DRAWN	-	JMA
CHECKED	-	AMD,
DATE	-	08/02/10

REVISIONS	
NAME	DATE

SHEET NO. 4
137 SHEETS

F.A.I RTE.	SECTION	COUNTY	TOTAL SHEETS	SHEET NO.
55	0711.2R & 1011.1BR	COOK	200	34
		CONTRACT NO. 60L39		
FED. ROAD DIST. NO. 1	ILLINOIS	FED. AID PROJECT		

p:\01345\beam and bearing fabrication\i55rlgpe.dgn 2:22:34 PM 8/2/2010

STATE OF ILLINOIS
DEPARTMENT OF TRANSPORTATION

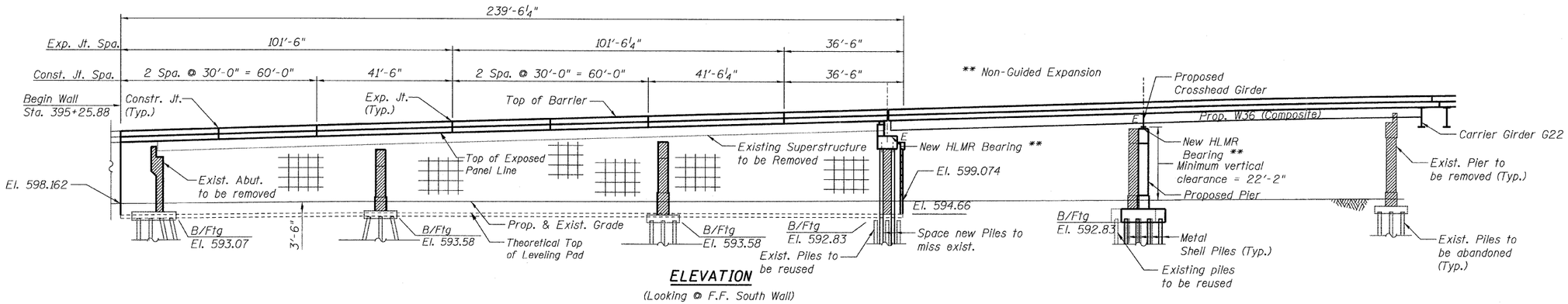

ELEVATION
(Looking @ F.F. South Wall)

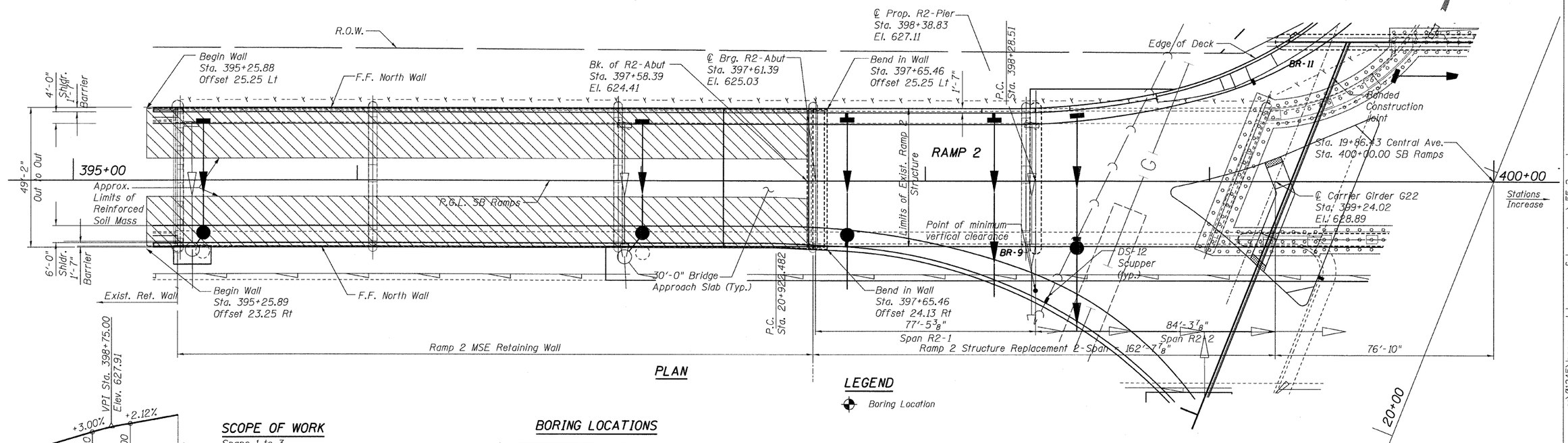

PLAN

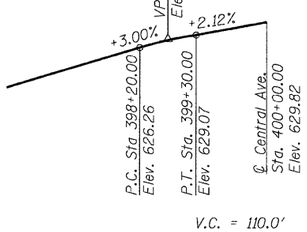

RAMP 2 PROFILE

SCOPE OF WORK

Spans 1 to 3

- Remove and replace the existing structure with Mechanically Stabilized Earth Retaining Walls.

Spans 4 and 5 (New Spans R2-1 & R2-2)

- Remove existing deck and Structural Steel.
- Remove Piers 4 and 5.
- Construct R2-Pier.
- Construct new Superstructure

BORING LOCATIONS

No.	Station	*Offset
BR-9	398+33.8	30.5' RT
BR-11	399+33.2	46.5' LT

* Offset from PGL SB Ramps

LEGEND

Boring Location

Notes:

1. Wall stations and offsets are given to the front face of the precast concrete wall panels, and are measured from the SB Ramps Baseline

GENERAL PLAN AND ELEVATION - RAMP 2
STRUCTURE NO. 016-0724

TY·LIN INTERNATIONAL

DESIGNED	-	JMA
CHECKED	-	AMD.
DRAWN	-	JMA
CHECKED	-	AMD.
DATE	-	08/02/10

REVISIONS	
NAME	DATE

SHEET NO. 5
137 SHEETS

F.A.I RTE.	SECTION	COUNTY	TOTAL SHEETS	SHEET NO.
55	0711.2R & 1011.1BR	COOK	200	35
		CONTRACT NO. 60L39		
FED. ROAD DIST. NO. 1	ILLINOIS	FED. AID PROJECT		

8/5/2010

p:\01345\beam and bearing fabrication\55-2gpe.dgn 6:00:32 PM

STATE OF ILLINOIS
DEPARTMENT OF TRANSPORTATION

BORING LOCATIONS

No.	Station	*Offset
BR-6	4+994.3	39.9m R

* Offset from PGL NB Ramps

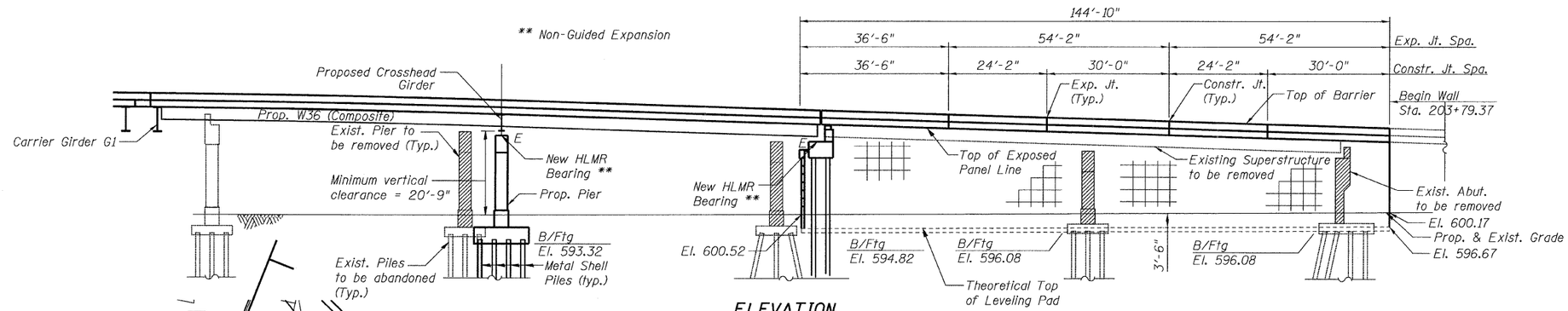

ELEVATION
(Looking @ F.F. South Wall)

LEGEND

Boring Location

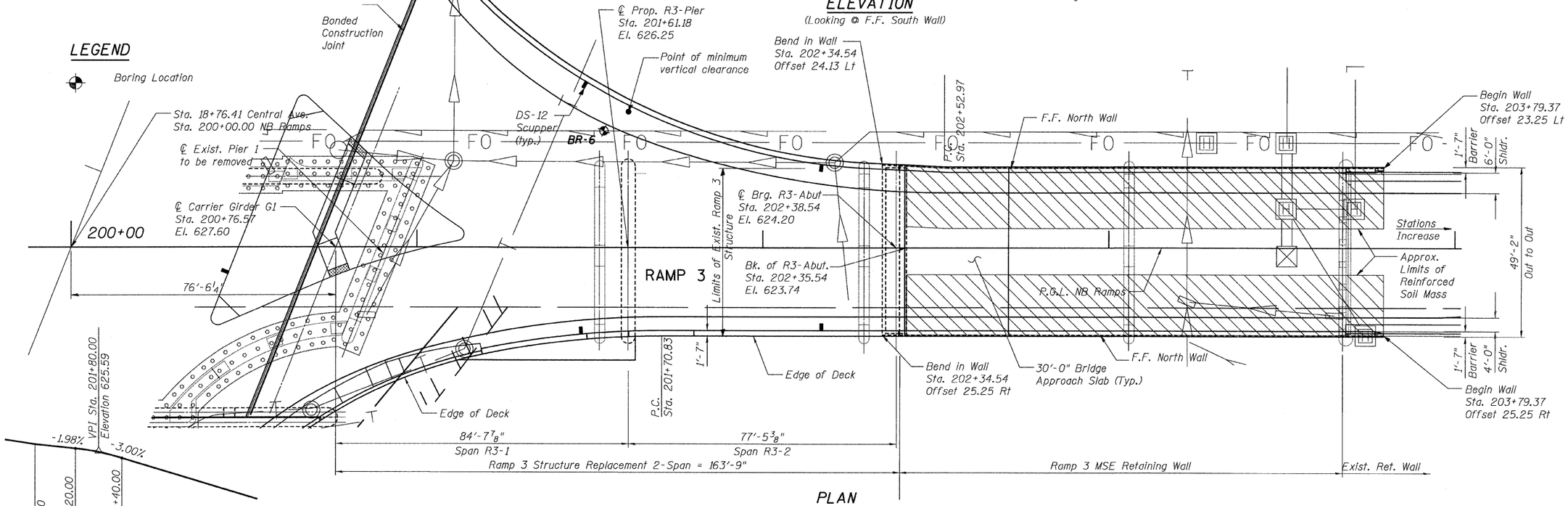

PLAN

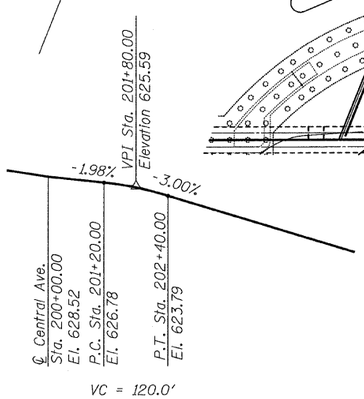

RAMP 3 PROFILE GRADE

SCOPE OF WORK

Spans 3 and 4
- Remove and replace the existing structure with Mechanically Stabilized Earth Retaining Walls.

Spans 1 & 2 (New Spans R3-1 & R3-2)
- Remove existing deck and Structural Steel.
- Remove Piers 1 and 2.
- Construct R3-Pier.
- Construct new Superstructure

Notes:

1. Wall stations and offsets are given to the front face of the precast concrete wall panels, and are measured from the NB Ramps Baseline

GENERAL PLAN AND ELEVATION - RAMP 3 STRUCTURE NO. 016-0724

TYLIN INTERNATIONAL

DESIGNED	-	JMA
CHECKED	-	AMD.
DRAWN	-	JMA
CHECKED	-	AMD.
DATE	-	08/02/10

REVISIONS	
NAME	DATE

SHEET NO. 6
137 SHEETS

F.A.I RTE.	SECTION	COUNTY	TOTAL SHEETS	SHEET NO.
55	0711.2R & 1011.1BR	COOK	200	36
		CONTRACT NO. 60L39		
FED. ROAD DIST. NO. 1	ILLINOIS	FED. AID PROJECT		

8/5/2010

p:\01345\beam and bearing fabrication\55r-3gpe.dgn 6:00:33 PM

STATE OF ILLINOIS
DEPARTMENT OF TRANSPORTATION

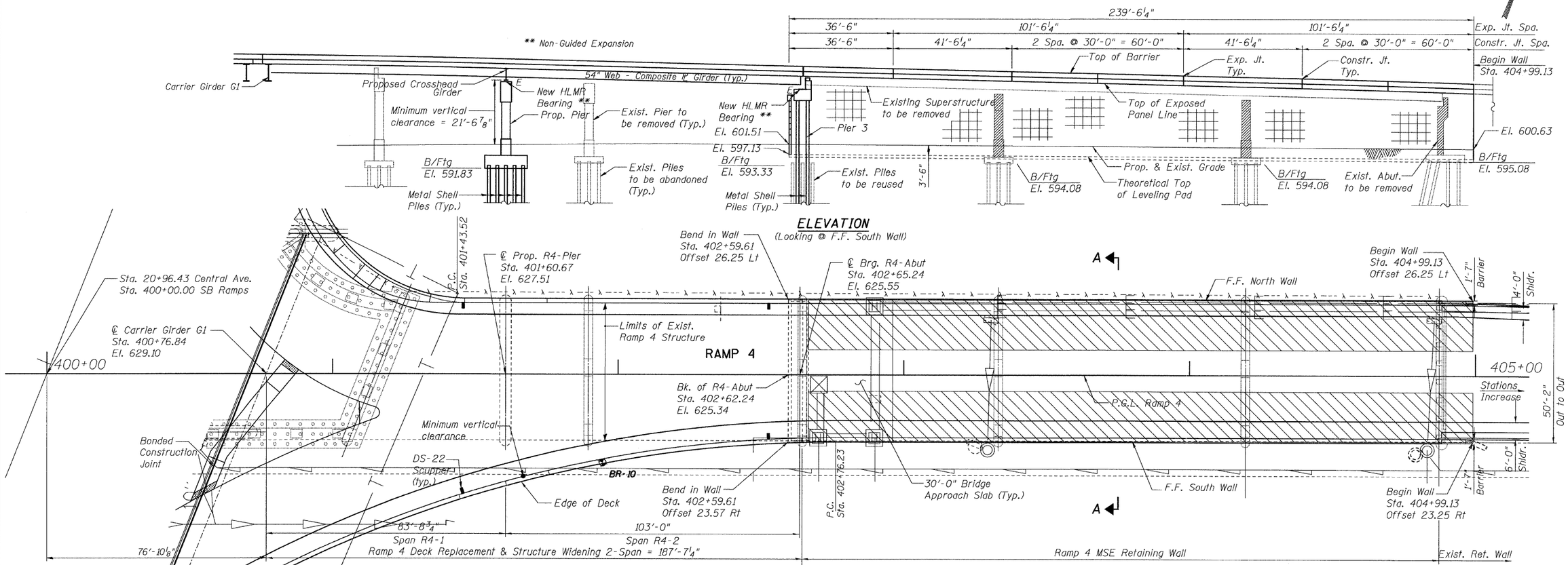

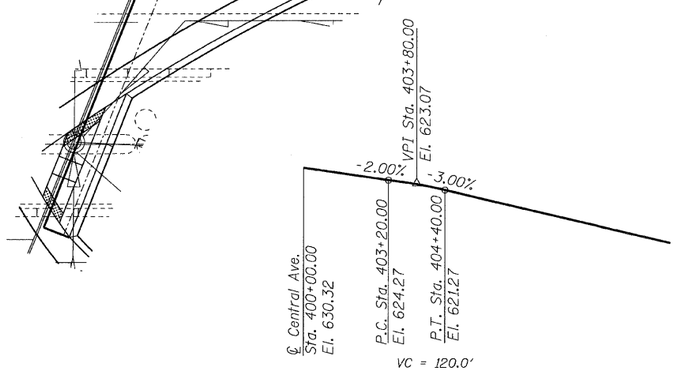

RAMP 4 PROFILE GRADE

SCOPE OF WORK

Spans 3-5

- Remove and replace the existing sturcture with Mechanically Stabilized Earth Retaining Walls.

Spans 1 & 2 (New Spans R4-1 & R4-2)

- Remove existing deck and Structural Steel.
- Remove Piers 1 and 2.
- Construct R4-Pier.
- Construct new Superstructure.

BORING LOCATIONS

No.	Station	*Offset
BR-10	401+96.7	31.0' RT

* Offset from PGL SB Ramps

LEGEND

Boring Location

Notes:

1. Wall stations and offsets are given to the front face of the precast concrete wall panels, and are measured from the SB Ramps Baseline

GENERAL PLAN AND ELEVATION - RAMP 4
STRUCTURE NO. 016-0724

TYLIN INTERNATIONAL

DESIGNED	-	JMA
CHECKED	-	AMD,
DRAWN	-	JMA
CHECKED	-	AMD,
DATE	-	08/02/10

REVISIONS	
NAME	DATE

SHEET NO. 7
137 SHEETS

F.A.I RTE.	SECTION	COUNTY	TOTAL SHEETS	SHEET NO.
55	0711.2R & 1011.1BR	COOK	200	37
		CONTRACT NO. 60L39		
FED. ROAD DIST. NO. 1	ILLINOIS	FED. AID PROJECT		

p:\01345\beam and bearing fabrication\55r4gpe.dgn
8/2/2010
2:22:38 PM

STATE OF ILLINOIS
DEPARTMENT OF TRANSPORTATION

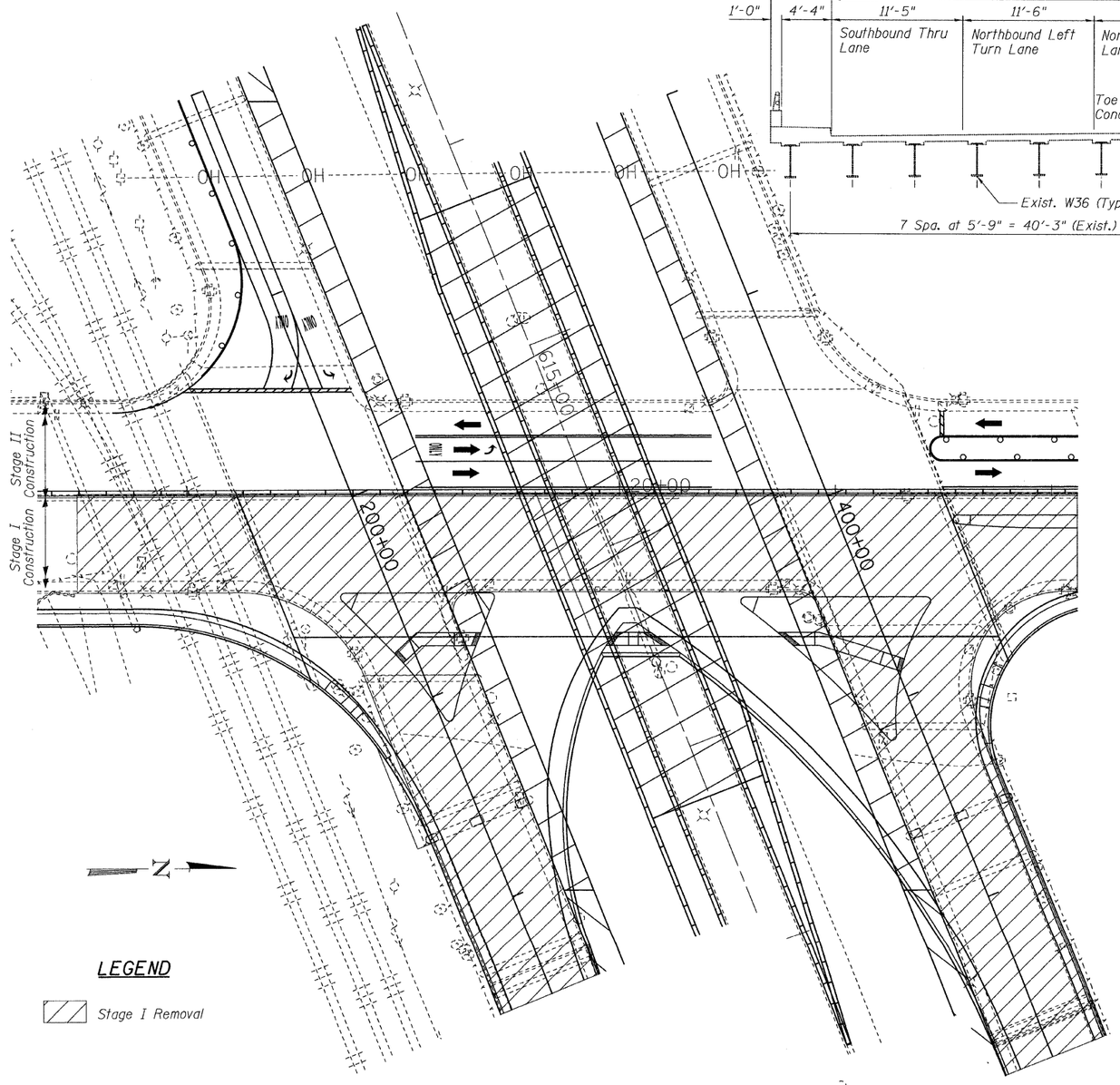

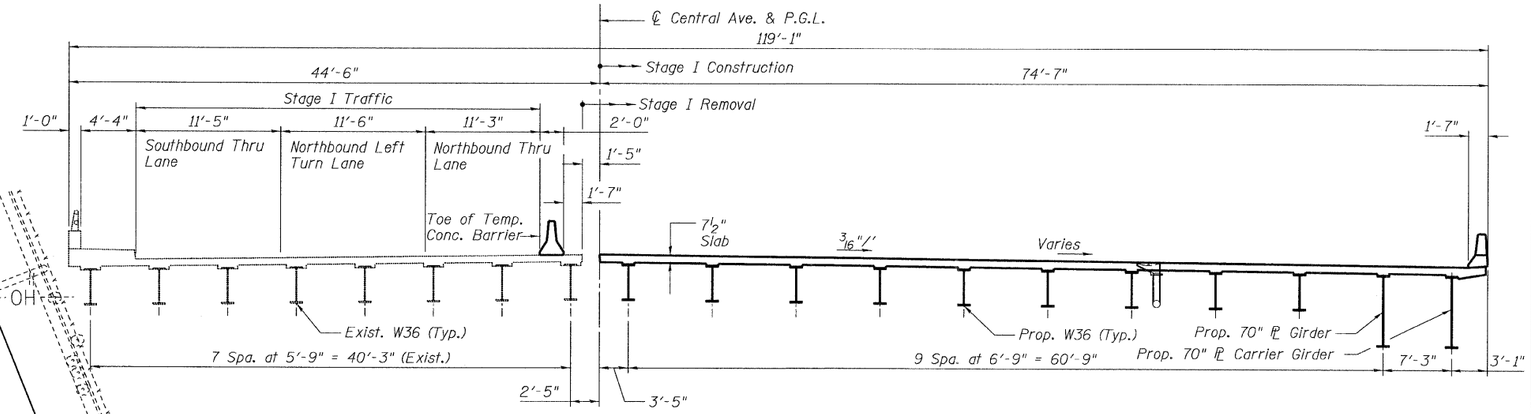

STAGE I:

Stage I is the construction of the east half of the new SPUI, which includes the widening and rehabilitation of the Northbound Lanes of Central Ave. (main line) and removal and reconstruction of Ramps 3 and 4.

STAGE I REMOVAL

1. Install temporary concrete barrier as shown and divert traffic to the existing Southbound bridge.
2. Close existing Northbound bridge and Ramps 3 and 4.
3. A left turn lane will be maintained along Northbound Central Avenue for access to westbound I-55 (Ramp 2).
4. Remove Central Avenue superstructure, within limits of stage I.
5. Remove Superstructure for Span R3-1 and R3-2 of Ramp 3 and Spans R4-1 and R4-2 of Ramp 4.
6. Remove concrete deck for Spans R3-3 and R3-4 for Ramp 3 and R4-3, R4-4 and R4-5 for Ramp 4.
7. Remove existing structural steel diaphragms at existing expansion joints in spans R3-3 and R3-4 of Ramp 3 and spans R4-3 and R4-5 of Ramp 4.
8. Remove existing Piers 1 and 2 in Ramps 3 and 4.
9. Cut existing structural steel at new Pier 3 in Ramp 3.
10. Shore existing structural steel at the east side of Pier 3 in Ramps 3 and 4.
11. Jack existing structural steel at C. Abut.1 in span 6 (S.N. 016-3241) and at C-Abutment 4 in span 11 (S.N. 016 - 3241) with in limits of stage 1.
12. Remove existing Pier 3 concrete in Ramps 3 and 4.
13. Remove the backwall of the existing east abutments in Ramps 3 and 4.
14. Remove C-Abutments 1 and 4 above the crashwall. within limits of stage 1.
15. Remove C-Abutments 2 and 3 within limits of stage 1.
16. Remove C-Abutment 1, 2, 3 and 4 wingwalls with in limits of stage I.
17. Remove the East circular edge of pier 6 (see sheet S2-10)

STAGE I CONSTRUCTION

1. Reconstruct and widen portions of C-Abutments 1, 2, 3 and 4 with in limits of stage 1.
2. Reconstruct and widen pier 6 with in limits of stage I.
3. Reconstruct backwalls of East Abutments at Ramps 3 and 4.
4. Reconstruct Pier 3 in both Ramps 3 and 4.
5. Construct Pier N2 in both Ramps 3 and 4.
6. Erect new structural steel diaphragms to replace the existing diaphragms at existing expansion joints.
7. Replace existing expansion bearings with new elastomeric bearings.
8. Paint existing structural steel beams and diaphragms in spans R3-3 and R3-4 for Ramp 3 and Spans R4-3, R4-4 and R4-5 for Ramp 4.
9. Erect new structural steel beams, girders, cross frames and diaphragms.
10. Construct new concrete deck, islands and parapets.
11. Install expansion joints at C.Abutments 1 and 4.
12. Install expansion joints at Pier 3 and West Abutments for Ramps 3 and 4.
13. Backfill behind East Abutments in Ramps 3 and 4 for construction of approach slab.
14. Remove Temporary shoring at C-Abutments 1 and 4 and at pier 3 for Ramps 1 and 2.

THIS SHEET FOR INFORMATION ONLY

LEGEND

Stage I Removal

STAGE I CONSTRUCTION
STRUCTURE NO. 016-0724

TYLIN INTERNATIONAL

DESIGNED	-	EMK
CHECKED	-	AMD.
DRAWN	-	EMK
CHECKED	-	AMD.
DATE	-	08/02/10

REVISIONS	
NAME	DATE

SHEET NO. 8
137 SHEETS

F.A.I RTE.	SECTION	COUNTY	TOTAL SHEETS	SHEET NO.
55	0711.2R & 1011.1BR	COOK	200	38
		CONTRACT NO. 60L39		
FED. ROAD DIST. NO. 1	ILLINOIS	FED. AID PROJECT		

8/2/2010

p:\01345\beam and bearing fabrication\55c2stage1.dgn

2:22:40 PM

STATE OF ILLINOIS
DEPARTMENT OF TRANSPORTATION

LEGEND

Stage II Removal

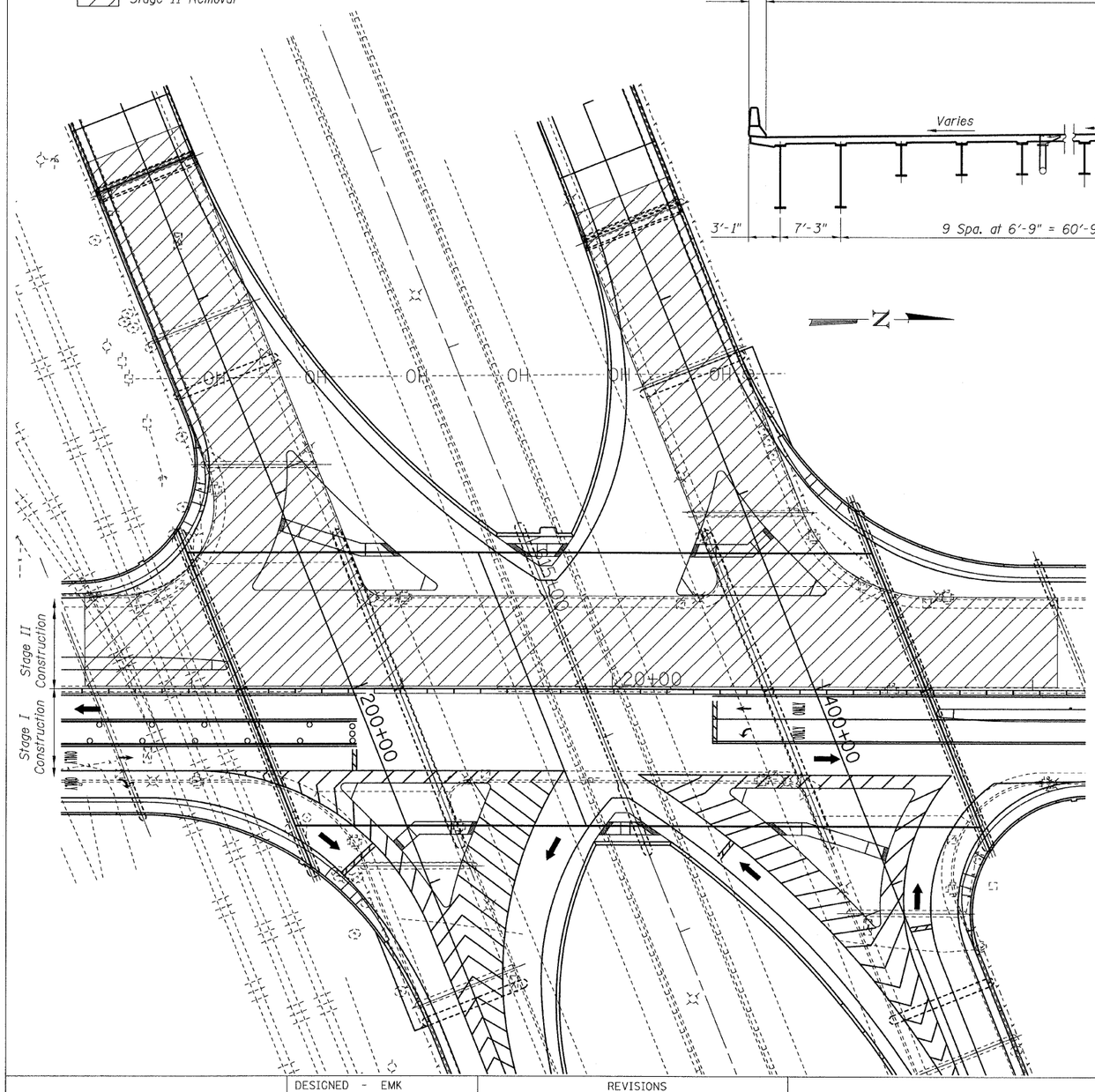

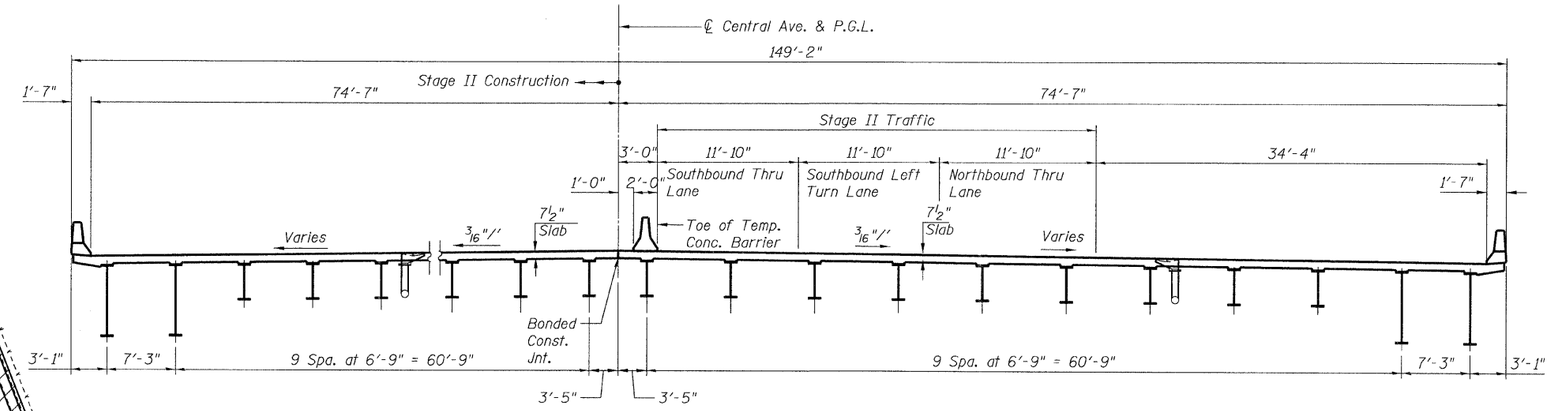

STAGE II

Stage II is the construction of the west half of the new SPUI, which includes the rehabilitation of the Southbound lanes of Central Ave-Bridge (main line) and removal and reconstruction of Ramp 1 and 2.

STAGE II REMOVAL

1. Install temporary concrete barrier as shown and divert traffuc to the constructed portion of the new bridge.
2. Ramps 1 and 2 will be closed, Ramps 3 and 4 will be open for traffic.
3. A left turn lane will be maintained along Central Avenue for access to the eastbound I-55 (Ramp 3).
4. Remove remainder of Central Avenue superstructure.
5. Remove Superstructure Spans R1-4 and R1-5 of Ramp 1 and for Spans R2-4 and R2-5 of Ramp 2.
6. Remove concrete deck for Spans R1-1, R1-2 and R1-3 of Ramp 1 and for Spans R2-1, R2-2 and R2-3 of Ramp 2.
7. Remove existing structural steel diaphragms at existing expansion joints in spans R1-1 and R1-3 of Ramp 1 and for spans R2-1 and R2-3 of Ramp 2.
8. Remove existing Piers 4 and 5 in Ramps 1 and 2.
9. Jack existing structural steel at the west side of Pier 3 in Ramps 1 and Ramp 2.
10. Shore existing structural steel at C-Abut 1 in span 6 (S.N. 016-3241) and at C-Abutment 4 in span (S.N. 016-3240) with in limits of stage II.
11. Remove existing concrete Pier 3 in Ramps 1 and 2.
12. Remove the backwall of the existing West Abutments of Ramps 1 and 2.
13. Remove remainder of C-Abutments 1 and 4 above the crashwall.
14. Remove remainder of C-Abutments 2 and 3.
15. Remove remainder of CAbutment 1, 2, 3 and 4 wingwalls.
16. Remove the West Circular edge of Pier 6 (See Sheet S2-10).

STAGE II CONSTRUCTION

1. Reconstruct and widen remainder portions of C-Abutments 1,2,3 and 4.
2. Reconstruct and widen remainder of pier 6.
3. Reconstruct backwalls of West Abutments at Ramps 1 and 2.
4. Reconstruct Pier 3 in both Ramps 1 and 2.
5. Construct Pier N4 in both Ramps 1 and 2.
6. Erect new structural steel diaphragms to replace the remainder existing diaphragms at existing expansion joints.
7. Replace remainder of existing expansion bearings with elastomic bearings.
8. Paint existing structural steel beams and diaphragms in Spans R1-3, R1-4 and R1-5 of Ramp 1 and in Spans R2-3, R2-4 and R2-5 of Ramp 2.
9. Erect new structural steel beams, girders, cross frames and diaphragms.
10. Construct new concrete deck, islands and parapets.
11. Install expansion joints at C-Abutments 1 and 4.
12. Install expansion joints at Pier 3 and West Abutments for Ramps 1 and 2.
13. Backfill behaind west Abutments in Ramps 1 and 2 for construction of approach slab.
14. Remove temporary sharing at C. Abutments and 4 and at pier 3 for Ramps 1 and 2.

THIS SHEET FOR INFORMATION ONLY

STAGE II CONSTRUCTION
STRUCTURE NO. 016-0724

TYLIN INTERNATIONAL

		REVISIONS	
DESIGNED - EMK		NAME	DATE
CHECKED - AMD.			
DRAWN - EMK			
CHECKED - AMD.			
DATE - 08/02/10			

SHEET NO. 9
137 SHEETS

F.A.I RTE.	SECTION	COUNTY	TOTAL SHEETS	SHEET NO.
55	0711.2R & 1011.1BR	COOK	200	39
		CONTRACT NO. 60L39		
FED. ROAD DIST. NO. 1	ILLINOIS	FED. AID PROJECT		

2:22:41 PM
p:\01345\beam and bearing fabrication\55c2stage2.dgn
8/2/2010

STATE OF ILLINOIS
DEPARTMENT OF TRANSPORTATION

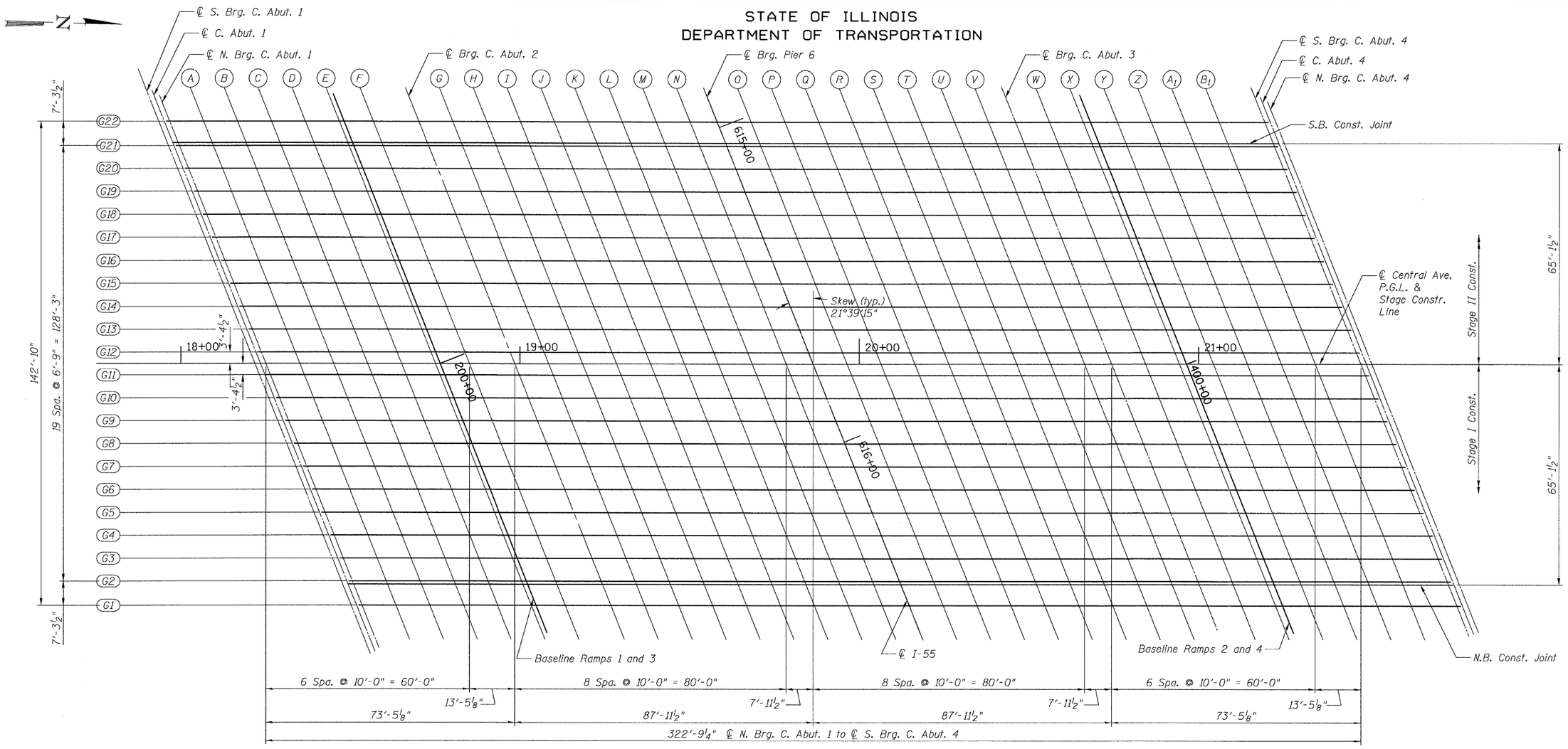

PLAN

STANDARD FILLET DETAILS

To determine "t": After all structural steel has been erected, elevations of the top flanges of the beams shall be taken at intervals shown on the Elevation Location Plan. These elevations subtracted from the "Theoretical Grade Elevations Adjusted for Dead Load Deflection" shown on Sheet Nos. 15 thru 28, minus slab thickness, equals the fillet heights "t" above the top flange of beams.

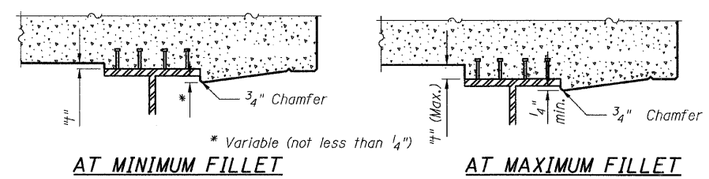

* Variable (not less than ¼")

AT MINIMUM FILLET

AT MAXIMUM FILLET

EXTERIOR BEAMS

TOP OF SLAB ELEVATION
LAYOUT - CENTRAL/I-55
STRUCTURE NO. 016-0724

TYLIN INTERNATIONAL	DESIGNED - EKH	REVISIONS	
	CHECKED - AMD.	NAME	DATE
	DRAWN - EKH		
	CHECKED - AMD.		
	DATE - 08/02/10		

SHEET NO. 10
137 SHEETS

F.A.I RTE.	SECTION	COUNTY	TOTAL SHEETS	SHEET NO.
55	0711.2R & 1011.1BR	COOK	200	40
		CONTRACT NO. 60L39		
FED. ROAD DIST. NO. 1	ILLINOIS	FED. AID PROJECT		

2:35:18 PM
p:\01345\beam end bearing fabrication\55c2tse.dgn
8/5/2010

STATE OF ILLINOIS
DEPARTMENT OF TRANSPORTATION

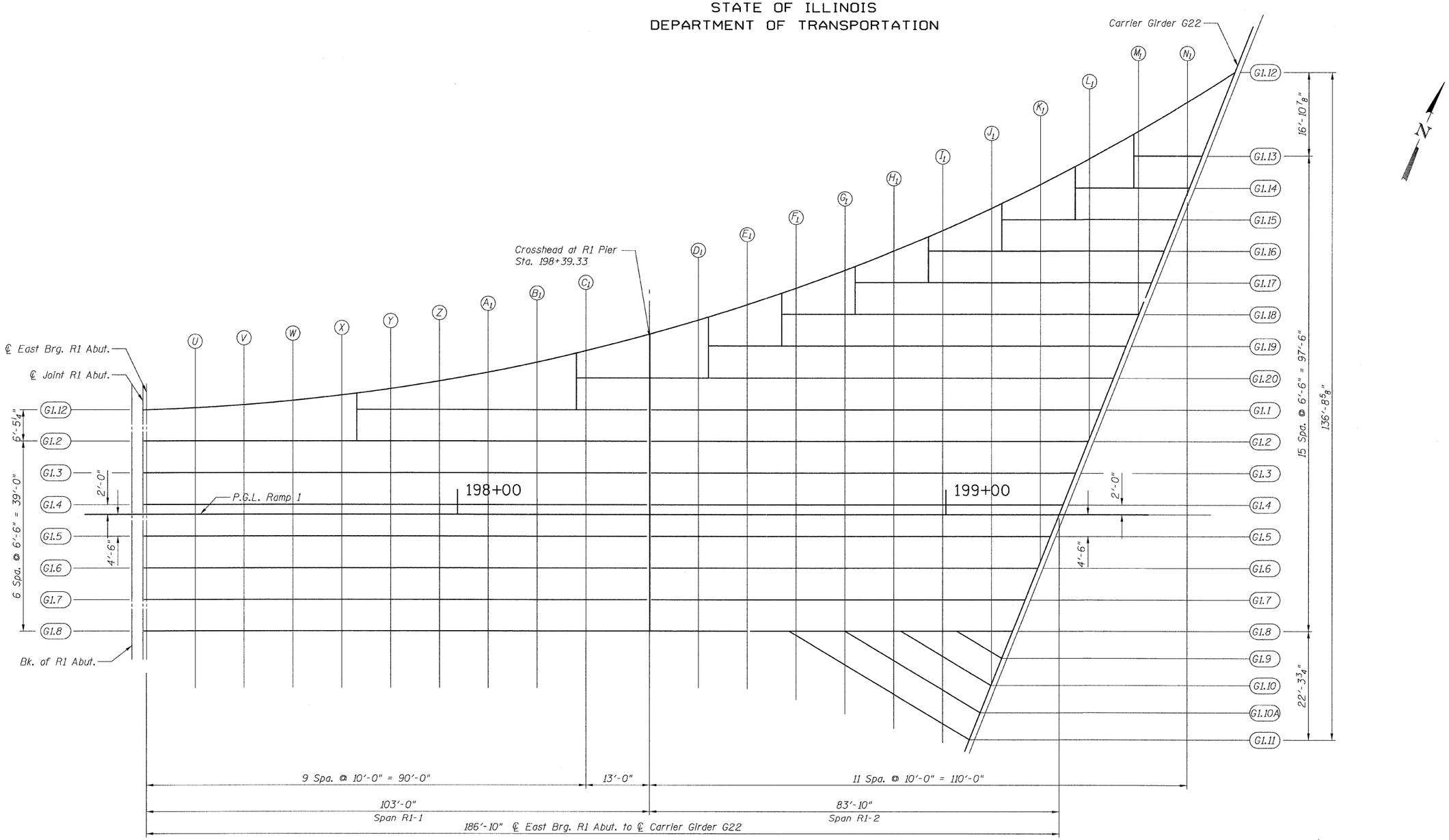

PLAN

Note:
For Standard Fillet Details, See Sheet 10.

TOP OF SLAB ELEVATIONS
LAYOUT - RAMP 1 FLARE
STRUCTURE NO. 016-0724

TY·LIN INTERNATIONAL

DESIGNED	-	EKH
CHECKED	-	AMD,
DRAWN	-	EKH
CHECKED	-	AMD,
DATE	-	08/02/10

REVISIONS	
NAME	DATE

SHEET NO. 11
137 SHEETS

F.A.I RTE.	SECTION	COUNTY	TOTAL SHEETS	SHEET NO.
55	0711.2R & 1011.1BR	COOK	200	41
		CONTRACT NO. 60L39		
FED. ROAD DIST. NO. 1	ILLINOIS	FED. AID PROJECT		

8/5/2010

p:\01345\beam and bearing fabrication\55f1tse.dgn

2:35:22 PM

STATE OF ILLINOIS
DEPARTMENT OF TRANSPORTATION

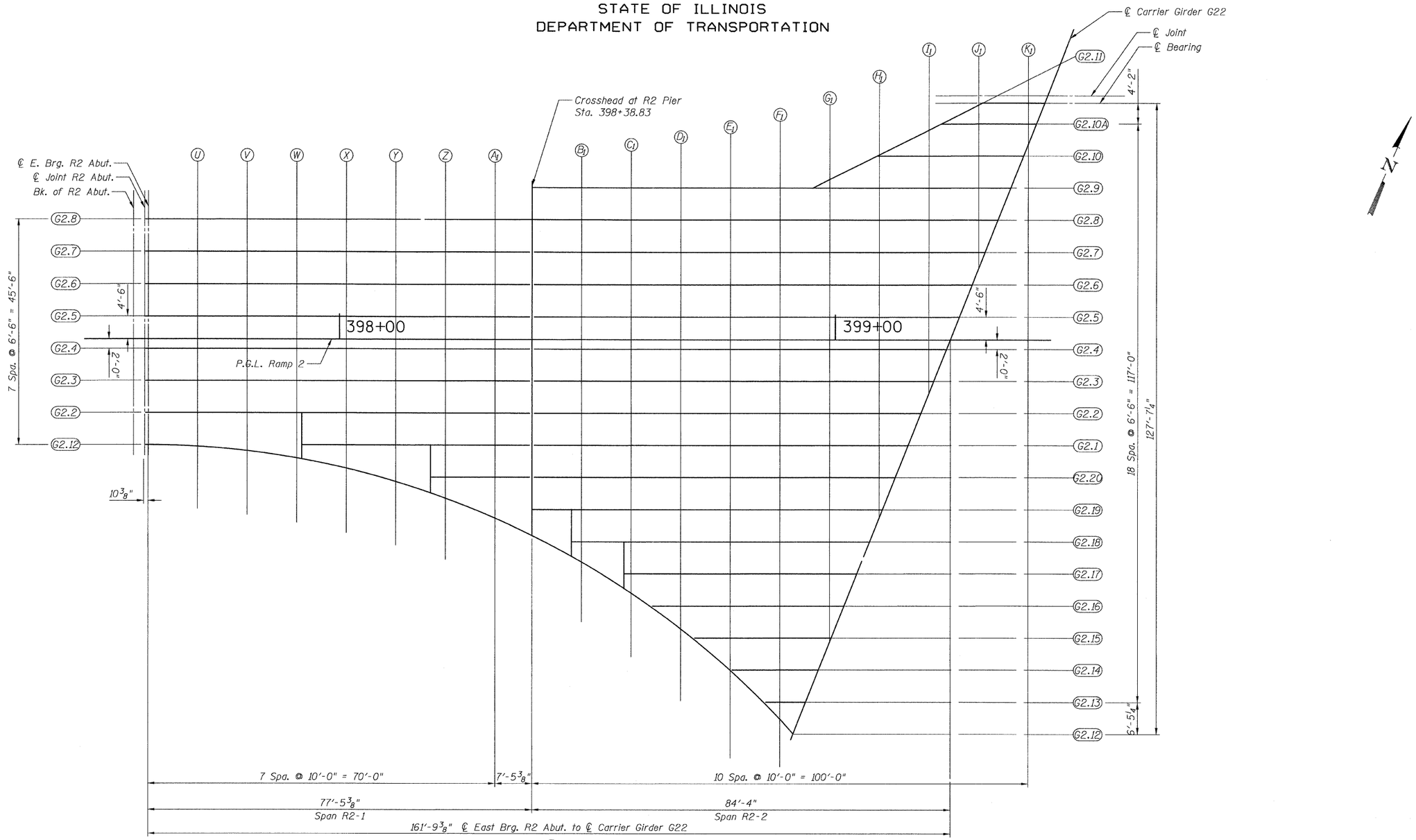

PLAN

Note:
For Standard Fillet Details, See Sheet 10.

TOP OF SLAB ELEVATIONS
LAYOUT - RAMP 2 FLARE
STRUCTURE NO. 016-0724

TYLIN INTERNATIONAL

DESIGNED	-	EKH	
CHECKED	-	AMD.	
DRAWN	-	EKH	
CHECKED	-	AMD.	
DATE	-	08/02/10	

REVISIONS	
NAME	DATE

SHEET NO. 12
137 SHEETS

F.A.I RTE.	SECTION	COUNTY	TOTAL SHEETS	SHEET NO.
55	0711.2R & 1011.1BR	COOK	200	42
		CONTRACT NO. 60L39		
FED. ROAD DIST. NO. 1	ILLINOIS	FED. AID PROJECT		

p:\01345\beam and bearing fabrication\55f2tse.dgn 2:35:23 PM
8/5/2010

STATE OF ILLINOIS
DEPARTMENT OF TRANSPORTATION

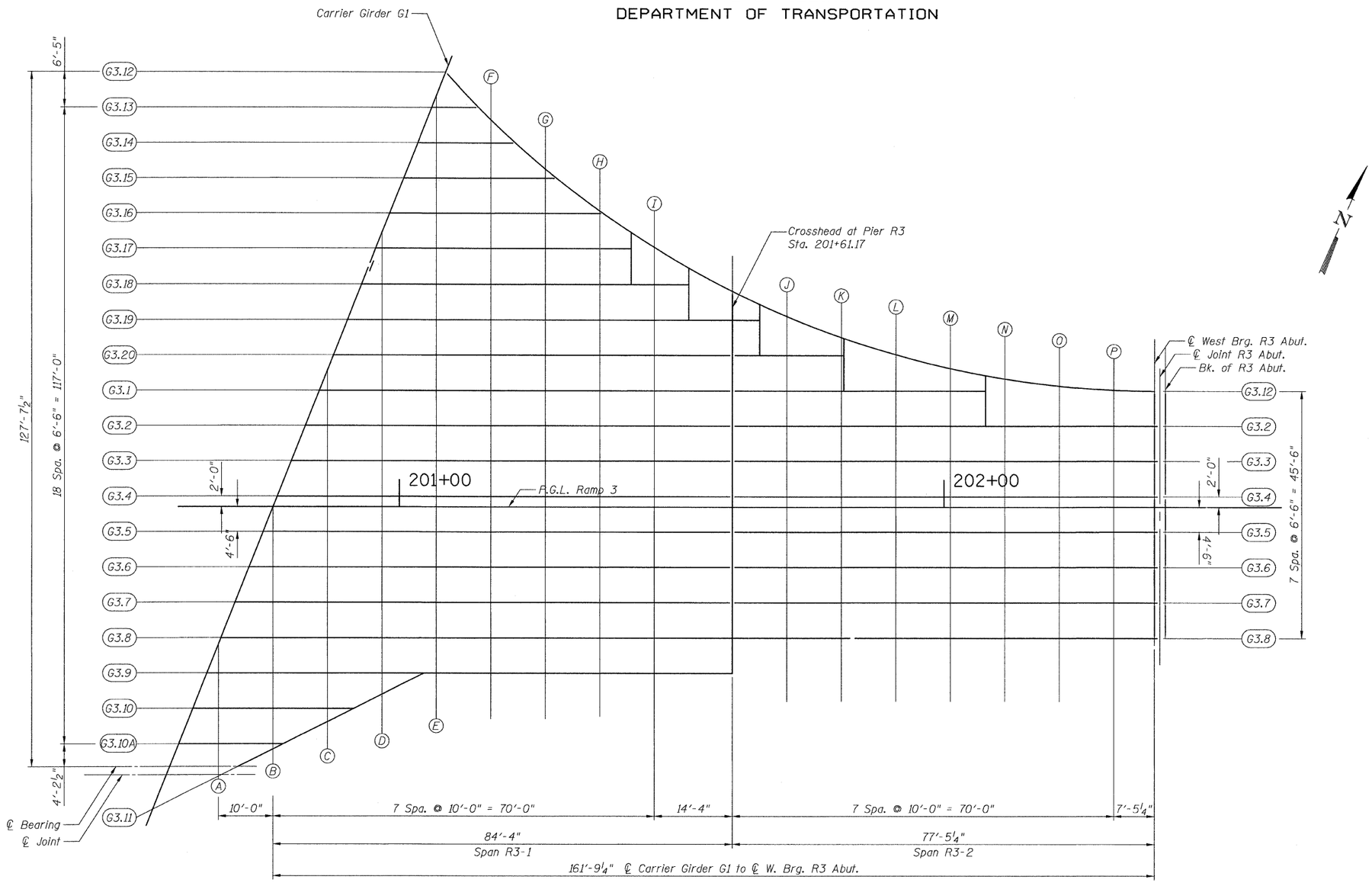

PLAN

Note:
For Standard Fillet Details, See Sheet 10.

TOP OF SLAB ELEVATIONS
LAYOUT - RAMP 3 FLARE
STRUCTURE NO. 016-0724

TYLIN INTERNATIONAL

DESIGNED	-	EKH	
CHECKED	-	AMD,	
DRAWN	-	EKH	
CHECKED	-	AMD,	
DATE	-	08/02/10	

REVISIONS	
NAME	DATE

SHEET NO. 13
137 SHEETS

F.A.I RTE.	SECTION	COUNTY	TOTAL SHEETS	SHEET NO.
55	0711.2R & 1011.1BR	COOK	200	43
		CONTRACT NO. 60L39		
FED. ROAD DIST. NO. 1	ILLINOIS	FED. AID PROJECT		

p:\01345\beam and bearing fabrication\55f3tss.dgn 2:35:25 PM 8/5/2010

STATE OF ILLINOIS
DEPARTMENT OF TRANSPORTATION

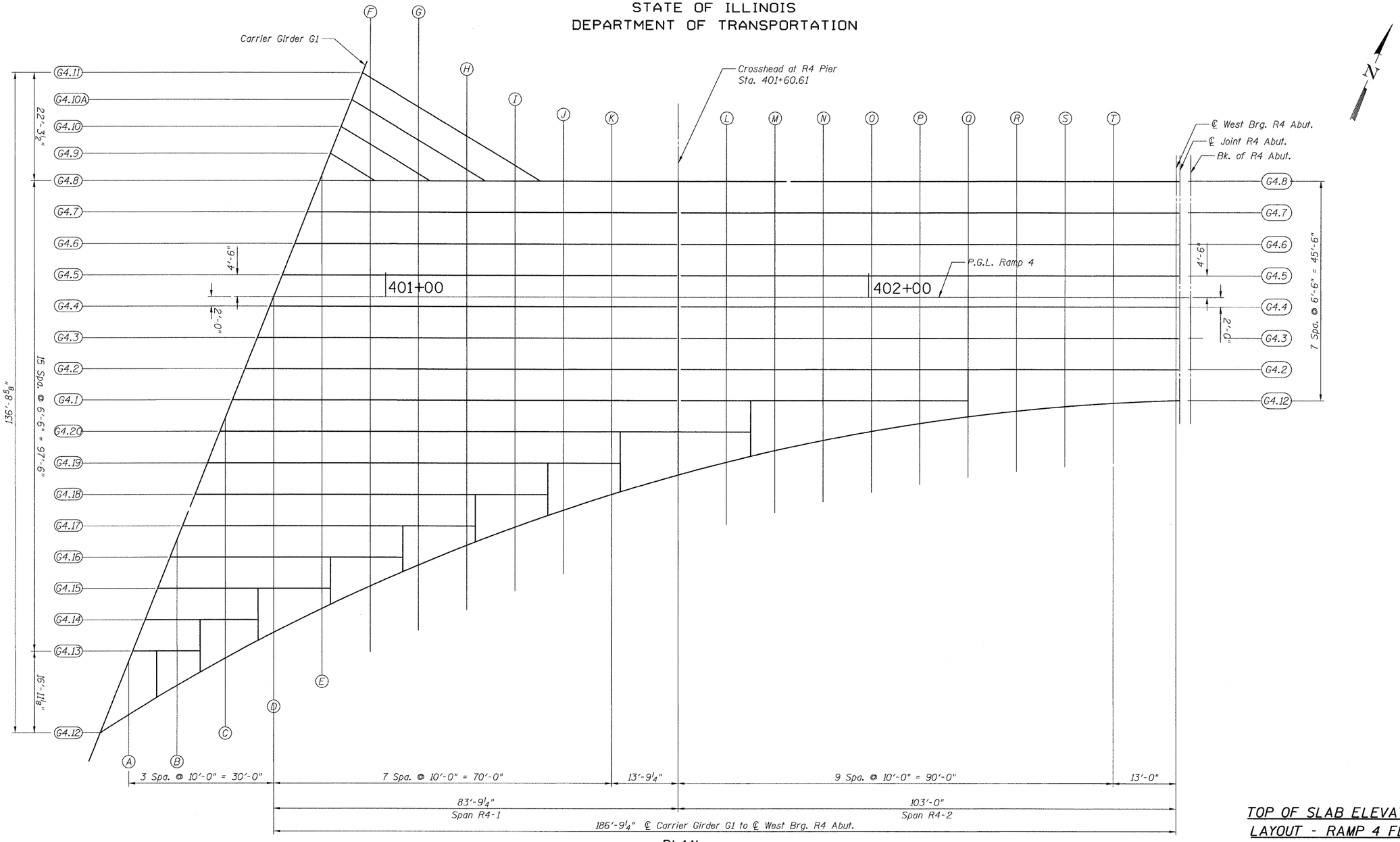

PLAN

Note:
For Standard Fillet Details, See Sheet 10.

TOP OF SLAB ELEVATIONS
LAYOUT - RAMP 4 FLARE
STRUCTURE NO. 016-0724

TY·LIN INTERNATIONAL

DESIGNED - EKH	
CHECKED - AMD,	
DRAWN - EKH	
CHECKED - AMD,	
DATE - 08/02/10	

REVISIONS	
NAME	DATE

SHEET NO. 14
137 SHEETS

F.A.I RTE.	SECTION	COUNTY	TOTAL SHEETS	SHEET NO.
55	0711.2R & 1011.1BR	COOK	200	44
		CONTRACT NO. 60L39		
FED. ROAD DIST. NO. 1	ILLINOIS	FED. AID PROJECT		

p:\01345\beam and bearing fabrication\55f4tse.dgn 2:35:26 PM 8/5/2010

STATE OF ILLINOIS
DEPARTMENT OF TRANSPORTATION

GIRDER G1

LOCATION	STATION	OFFSET	THEORETICAL GRADE ELEVATIONS	THEORETICAL GRADE ELEVATIONS ADJUSTED FOR DEAD LOAD DEFLECTIONS
℄ C. Abut. 1	18+51.77	71.42	626.81	626.81
℄ N. Brg. C. Abut. 1	18+53.38	71.42	626.84	626.84
A	18+63.38	71.42	627.01	627.02
B	18+73.38	71.42	627.18	627.20
C	18+83.38	71.42	627.34	627.37
D	18+93.38	71.42	627.49	627.52
E	19+03.38	71.42	627.63	627.65
F	19+13.38	71.42	627.77	627.78
℄ Brg. C. Abut. 2	19+26.82	71.42	627.94	627.94
G	19+36.82	71.42	628.06	628.06
H	19+46.82	71.42	628.17	628.17
I	19+56.82	71.42	628.27	628.28
J	19+66.82	71.42	628.36	628.37
K	19+76.82	71.42	628.45	628.46
L	19+86.82	71.42	628.53	628.53
M	19+96.82	71.42	628.60	628.60
N	20+06.82	71.42	628.66	628.66
℄ Brg. Pier 6	20+14.77	71.42	628.71	628.71
O	20+24.77	71.42	628.76	628.76
P	20+34.77	71.42	628.80	628.81
Q	20+44.77	71.42	628.83	628.85
R	20+54.77	71.42	628.87	628.89
S	20+64.77	71.42	628.91	628.93
T	20+74.77	71.42	628.94	628.96
U	20+84.77	71.42	628.98	628.99
V	20+94.77	71.42	629.02	629.02
℄ Brg. C. Abut. 3	21+02.73	71.42	629.05	629.05
W	21+12.73	71.42	629.09	629.09
X	21+22.73	71.42	629.12	629.13
Y	21+32.73	71.42	629.16	629.18
Z	21+42.73	71.42	629.20	629.21
A1	21+52.73	71.42	629.23	629.25
B1	21+62.73	71.42	629.26	629.27
℄ S. Brg. C. Abut. 4	21+76.16	71.42	629.30	629.30
℄ C. Abut. 4	21+77.78	71.42	629.31	629.31

N.B. CONST. JOINT

LOCATION	STATION	OFFSET	THEORETICAL GRADE ELEVATIONS	THEORETICAL GRADE ELEVATIONS ADJUSTED FOR DEAD LOAD DEFLECTIONS
℄ C. Abut. 1	17+97.56	65.13	625.84	625.84
℄ N. Brg. C. Abut 1	17+99.17	65.13	625.87	625.87
A	18+09.17	65.13	626.09	626.09
B	18+19.17	65.13	626.30	626.30
C	18+29.17	65.13	626.50	626.50
D	18+39.17	65.13	626.70	626.70
E	18+49.17	65.13	626.88	626.88
F	18+59.17	65.13	627.06	627.06
℄ Brg. C. Abut. 2	18+72.61	65.13	627.29	627.29
G	18+82.61	65.13	627.45	627.45
H	18+92.61	65.13	627.60	627.60
I	19+02.61	65.13	627.75	627.75
J	19+12.61	65.13	627.88	627.88
K	19+22.61	65.13	628.01	628.01
L	19+32.61	65.13	628.13	628.13
M	19+42.61	65.13	628.25	628.25
N	19+52.61	65.13	628.35	628.35
℄ Brg. Pier 6	19+60.56	65.13	628.43	628.43
O	19+70.56	65.13	628.52	628.52
P	19+80.56	65.13	628.60	628.60
Q	19+90.56	65.13	628.68	628.68
R	20+00.56	65.13	628.75	628.75
S	20+10.56	65.13	628.81	628.81
T	20+20.56	65.13	628.86	628.86
U	20+30.56	65.13	628.90	628.90
V	20+40.56	65.13	628.94	628.94
℄ Brg. C. Abut. 3	20+48.52	65.13	628.97	628.97
W	20+58.52	65.13	629.01	629.02
X	20+68.52	65.13	629.05	629.06
Y	20+78.52	65.13	629.08	629.09
Z	20+88.52	65.13	629.12	629.13
A1	20+98.52	65.13	629.16	629.17
B1	21+08.52	65.13	629.19	629.20
℄ S. Brg. C. Abut. 4	21+21.95	65.13	629.24	629.24
℄ C. Abut. 4	21+23.57	65.13	629.25	629.25

GIRDER G2

LOCATION	STATION	OFFSET	THEORETICAL GRADE ELEVATIONS	THEORETICAL GRADE ELEVATIONS ADJUSTED FOR DEAD LOAD DEFLECTIONS
℄ C. Abut. 1	18+48.91	64.13	626.90	626.90
℄ N. Brg. C. Abut 1	18+50.52	64.13	626.93	626.93
A	18+60.52	64.13	627.11	627.11
B	18+70.52	64.13	627.28	627.28
C	18+80.52	64.13	627.44	627.44
D	18+90.52	64.13	627.59	627.59
E	19+00.52	64.13	627.74	627.74
F	19+10.52	64.13	627.88	627.88
℄ Brg. C. Abut. 2	19+23.95	64.13	628.05	628.05
G	19+33.95	64.13	628.17	628.17
H	19+43.95	64.13	628.28	628.28
I	19+53.95	64.13	628.39	628.39
J	19+63.95	64.13	628.48	628.48
K	19+73.95	64.13	628.57	628.57
L	19+83.95	64.13	628.65	628.66
M	19+93.95	64.13	628.73	628.73
N	20+03.95	64.13	628.79	628.79
℄ Brg. Pier 6	20+11.91	64.13	628.84	628.84
O	20+21.91	64.13	628.89	628.89
P	20+31.91	64.13	628.93	628.93
Q	20+41.91	64.13	628.97	628.97
R	20+51.91	64.13	629.01	629.00
S	20+61.91	64.13	629.04	629.04
T	20+71.91	64.13	629.08	629.07
U	20+81.91	64.13	629.12	629.11
V	20+91.91	64.13	629.15	629.15
℄ Brg. C. Abut. 3	20+99.87	64.13	629.18	629.18
W	21+09.87	64.13	629.22	629.22
X	21+19.87	64.13	629.26	629.26
Y	21+29.87	64.13	629.29	629.30
Z	21+39.87	64.13	629.33	629.34
A1	21+49.87	64.13	629.37	629.38
B1	21+59.87	64.13	629.40	629.41
℄ S. Brg. C. Abut. 4	21+73.30	64.13	629.44	629.44
℄ C. Abut. 4	21+74.91	64.13	629.44	629.44

GIRDER G3

LOCATION	STATION	OFFSET	THEORETICAL GRADE ELEVATIONS	THEORETICAL GRADE ELEVATIONS ADJUSTED FOR DEAD LOAD DEFLECTIONS
℄ C. Abut. 1	18+46.22	50.63	626.99	626.99
℄ N. Brg. C. Abut 1	18+47.84	50.63	627.02	627.02
A	18+57.84	50.63	627.20	627.22
B	18+67.84	50.63	627.37	627.41
C	18+77.84	50.63	627.53	627.58
D	18+87.84	50.63	627.69	627.73
E	18+97.84	50.63	627.84	627.87
F	19+07.84	50.63	627.98	627.99
℄ Brg. C. Abut. 2	19+21.27	50.63	628.15	628.15
G	19+31.27	50.63	628.27	628.28
H	19+41.27	50.63	628.39	628.41
I	19+51.27	50.63	628.49	628.53
J	19+61.27	50.63	628.59	628.64
K	19+71.27	50.63	628.68	628.73
L	19+81.27	50.63	628.77	628.80
M	19+91.27	50.63	628.84	628.86
N	20+01.27	50.63	628.91	628.91
℄ Brg. Pier 6	20+09.23	50.63	628.96	628.96
O	20+19.23	50.63	629.01	629.02
P	20+29.23	50.63	629.06	629.08
Q	20+39.23	50.63	629.09	629.13
R	20+49.23	50.63	629.13	629.17
S	20+59.23	50.63	629.17	629.21
T	20+69.23	50.63	629.21	629.24
U	20+79.23	50.63	629.24	629.26
V	20+89.23	50.63	629.28	629.28
℄ Brg. C. Abut. 3	20+97.19	50.63	629.31	629.31
W	21+07.19	50.63	629.35	629.35
X	21+17.19	50.63	629.38	629.41
Y	21+27.19	50.63	629.42	629.46
Z	21+37.19	50.63	629.46	629.50
A1	21+47.19	50.63	629.49	629.54
B1	21+57.19	50.63	629.53	629.56
℄ S. Brg. C. Abut. 4	21+70.62	50.63	629.57	629.57
℄ C. Abut. 4	21+72.23	50.63	629.57	629.57

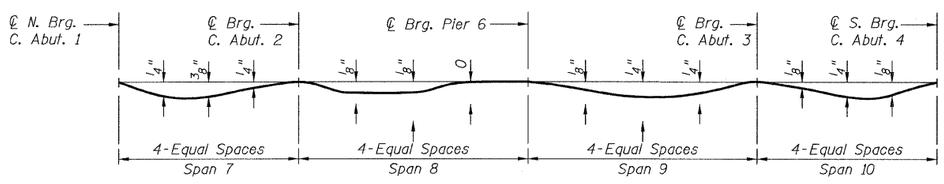

DEAD LOAD DEFLECTION DIAGRAM (EXTERIOR GIRDER G1)

(includes weight of concrete only)
(Girder G22 Opposite Hand)

Note: The above deflections are not to be used in the field if the engineer is working from the grade elevations adjusted for dead load deflections as shown above.

TOP OF SLAB ELEV. - 1
CENTRAL / I-55
STRUCTURE NO. 016-0724

TYLIN INTERNATIONAL

DESIGNED	JF, EKH
CHECKED	AMD,
DRAWN	JPM, EKH
CHECKED	AMD,
DATE	08/02/10

REVISIONS	
NAME	DATE

SHEET NO. 15
137 SHEETS

F.A.I RTE.	SECTION	COUNTY	TOTAL SHEETS	SHEET NO.
55	0711.2R & 1011.1BR	COOK	200	45
		CONTRACT NO. 60L39		
FED. ROAD DIST. NO. 1	ILLINOIS	FED. AID PROJECT		

p:\01345\beam and bearing fabrication\I55c2tsedata1.dgn 2:35:27 PM
8/5/2010

STATE OF ILLINOIS
DEPARTMENT OF TRANSPORTATION

GIRDER G4

LOCATION	STATION	OFFSET	THEORETICAL GRADE ELEVATIONS	THEORETICAL GRADE ELEVATIONS ADJUSTED FOR DEAD LOAD DEFLECTIONS
℄ C. Abut. 1	18+43.54	50.63	627.07	627.07
℄ N. Brg. C. Abut 1	18+45.16	50.63	627.10	627.10
A	18+55.16	50.63	627.28	627.31
B	18+65.16	50.63	627.46	627.50
C	18+75.16	50.63	627.62	627.67
D	18+85.16	50.63	627.78	627.82
E	18+95.16	50.63	627.93	627.96
F	19+05.16	50.63	628.07	628.09
℄ Brg. C. Abut. 2	19+18.59	50.63	628.25	628.25
G	19+28.59	50.63	628.38	628.38
H	19+38.59	50.63	628.49	628.51
I	19+48.59	50.63	628.60	628.64
J	19+58.59	50.63	628.70	628.75
K	19+68.59	50.63	628.80	628.84
L	19+78.59	50.63	628.88	628.91
M	19+88.59	50.63	628.96	628.98
N	19+98.59	50.63	629.03	629.03
℄ Brg. Pier 6	20+06.54	50.63	629.08	629.08
O	20+16.54	50.63	629.13	629.14
P	20+26.54	50.63	629.18	629.20
Q	20+36.54	50.63	629.22	629.26
R	20+46.54	50.63	629.26	629.30
S	20+56.54	50.63	629.29	629.34
T	20+66.54	50.63	629.33	629.36
U	20+76.54	50.63	629.37	629.39
V	20+86.54	50.63	629.40	629.41
℄ Brg. C. Abut. 3	20+94.50	50.63	629.43	629.43
W	21+04.50	50.63	629.47	629.48
X	21+14.50	50.63	629.51	629.53
Y	21+24.50	50.63	629.54	629.58
Z	21+34.50	50.63	629.58	629.63
A1	21+44.50	50.63	629.62	629.66
B1	21+54.50	50.63	629.65	629.68
℄ S. Brg. C. Abut. 4	21+67.93	50.63	629.69	629.69
℄ C. Abut. 4	21+69.55	50.63	629.70	629.70

GIRDER G5

LOCATION	STATION	OFFSET	THEORETICAL GRADE ELEVATIONS	THEORETICAL GRADE ELEVATIONS ADJUSTED FOR DEAD LOAD DEFLECTIONS
℄ C. Abut. 1	18+40.86	43.88	627.16	627.16
℄ N. Brg. C. Abut 1	18+42.47	43.88	627.19	627.19
A	18+52.47	43.88	627.37	627.39
B	18+62.47	43.88	627.55	627.59
C	18+72.47	43.88	627.71	627.76
D	18+82.47	43.88	627.87	627.92
E	18+92.47	43.88	628.03	628.06
F	19+02.47	43.88	928.17	928.18
℄ Brg. C. Abut. 2	19+15.90	43.88	628.35	628.35
G	19+25.90	43.88	628.48	628.49
H	19+35.90	43.88	628.60	628.62
I	19+45.90	43.88	628.71	628.74
J	19+55.90	43.88	628.81	628.85
K	19+65.90	43.88	628.91	628.95
L	19+75.90	43.88	628.99	629.03
M	19+85.90	43.88	629.07	629.09
N	19+95.90	43.88	629.14	629.15
℄ Brg. Pier 6	20+03.86	43.88	629.20	629.20
O	20+13.86	43.88	629.25	629.26
P	20+23.86	43.88	629.30	629.32
Q	20+33.86	43.88	629.34	629.38
R	20+43.86	43.88	629.38	629.42
S	20+53.86	43.88	629.42	629.46
T	20+63.86	43.88	629.46	629.49
U	20+73.86	43.88	629.49	629.51
V	20+83.86	43.88	629.53	629.53
℄ Brg. C. Abut. 3	20+91.82	43.88	629.56	629.56
W	21+01.82	43.88	629.60	629.60
X	21+11.82	43.88	629.63	629.66
Y	21+21.82	43.88	629.67	629.71
Z	21+31.82	43.88	629.71	629.75
A1	21+41.82	43.88	629.74	629.79
B1	21+51.82	43.88	629.78	629.81
℄ S. Brg. C. Abut. 4	21+65.25	43.88	629.82	629.82
℄ C. Abut. 4	21+66.86	43.88	629.83	629.83

GIRDER G6

LOCATION	STATION	OFFSET	THEORETICAL GRADE ELEVATIONS	THEORETICAL GRADE ELEVATIONS ADJUSTED FOR DEAD LOAD DEFLECTIONS
℄ C. Abut. 1	18+38.18	37.13	627.24	627.24
℄ N. Brg. C. Abut 1	18+39.79	37.13	627.27	627.27
A	18+49.79	37.13	627.46	627.48
B	18+59.79	37.13	627.63	627.67
C	18+69.79	37.13	627.80	627.85
D	18+79.79	37.13	627.97	628.01
E	18+89.79	37.13	628.12	628.15
F	18+99.79	37.13	628.27	628.28
℄ Brg. C. Abut. 2	19+13.22	37.13	628.45	628.45
G	19+23.22	37.13	628.58	628.59
H	19+33.22	37.13	628.70	628.72
I	19+43.22	37.13	628.81	628.85
J	19+53.22	37.13	628.92	628.96
K	19+63.22	37.13	629.02	629.06
L	19+73.22	37.13	629.11	629.14
M	19+83.22	37.13	629.19	629.21
N	19+93.22	37.13	629.26	629.27
℄ Brg. Pier 6	20+01.18	37.13	629.31	629.31
O	20+11.18	37.13	629.37	629.38
P	20+21.18	37.13	629.42	629.45
Q	20+31.18	37.13	629.47	629.50
R	20+41.18	37.13	629.51	629.55
S	20+51.18	37.13	629.54	629.59
T	20+61.18	37.13	629.58	629.61
U	20+71.18	37.13	629.62	629.64
V	20+81.18	37.13	629.65	629.66
℄ Brg. C. Abut. 3	20+89.14	37.13	629.68	629.68
W	20+99.14	37.13	629.72	629.73
X	21+09.14	37.13	629.76	629.78
Y	21+19.14	37.13	629.79	629.83
Z	21+29.14	37.13	629.83	629.88
A1	21+39.14	37.13	629.87	629.91
B1	21+49.14	37.13	629.91	629.94
℄ S. Brg. C. Abut. 4	21+62.57	37.13	629.95	629.95
℄ C. Abut. 4	21+64.18	37.13	629.95	629.95

GIRDER G7

LOCATION	STATION	OFFSET	THEORETICAL GRADE ELEVATIONS	THEORETICAL GRADE ELEVATIONS ADJUSTED FOR DEAD LOAD DEFLECTIONS
℄ C. Abut. 1	18+35.49	30.38	627.32	627.32
℄ N. Brg. C. Abut 1	18+37.11	30.38	627.35	627.35
A	18+47.11	30.38	627.54	627.57
B	18+57.11	30.38	627.72	627.76
C	18+67.11	30.38	627.89	627.94
D	18+77.11	30.38	628.06	628.10
E	18+87.11	30.38	628.22	628.25
F	18+97.11	30.38	628.36	628.38
℄ Brg. C. Abut. 2	19+10.54	30.38	628.55	628.55
G	19+20.54	30.38	628.68	628.69
H	19+30.54	30.38	628.81	628.83
I	19+40.54	30.38	628.92	628.96
J	19+50.54	30.38	629.03	629.07
K	19+60.54	30.38	629.13	629.17
L	19+70.54	30.38	629.22	629.25
M	19+80.54	30.38	629.30	629.32
N	19+90.54	30.38	629.38	629.38
℄ Brg. Pier 6	19+98.49	30.38	629.43	629.43
O	20+08.49	30.38	629.49	629.50
P	20+18.49	30.38	629.55	629.57
Q	20+28.49	30.38	629.59	629.63
R	20+38.49	30.38	629.63	629.68
S	20+48.49	30.38	629.67	629.71
T	20+58.49	30.38	629.71	629.74
U	20+68.49	30.38	629.74	629.76
V	20+78.49	30.38	629.78	629.78
℄ Brg. C. Abut. 3	20+86.45	30.38	629.81	629.81
W	20+96.45	30.38	629.85	629.86
X	21+06.45	30.38	629.88	629.91
Y	21+16.45	30.38	629.92	629.96
Z	21+26.45	30.38	629.96	630.00
A1	21+36.45	30.38	629.99	630.04
B1	21+46.45	30.38	630.03	630.06
℄ S. Brg. C. Abut. 4	21+58.88	30.38	630.07	630.07
℄ C. Abut. 4	21+61.50	30.38	630.08	630.08

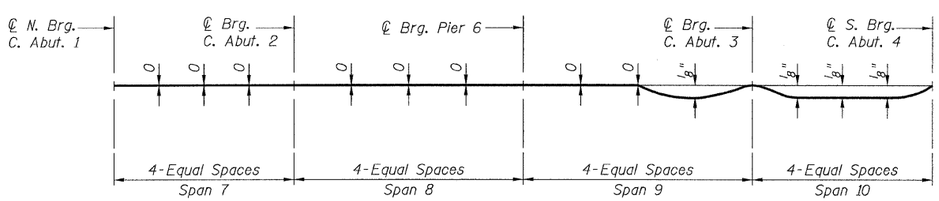

DEAD LOAD DEFLECTION DIAGRAM (INTERIOR GIRDER G2)

(Includes weight of concrete only)
(Girder 21 Opposite Hand)

Note: The above deflections are not to be used in the field if the engineer is working from the grade elevations adjusted for dead load deflections as shown above.

TOP OF SLAB ELEV. - 2
CENTRAL / I-55
STRUCTURE NO. 016-0724

TYLIN INTERNATIONAL

DESIGNED	-	EKH
CHECKED	-	AMD.
DRAWN	-	EKH
CHECKED	-	AMD.
DATE	-	08/02/10

REVISIONS	
NAME	DATE

SHEET NO. 16
137 SHEETS

F.A.I RTE.	SECTION	COUNTY	TOTAL SHEETS	SHEET NO.
55	0711.2R & 1011.1BR	COOK	200	46
		CONTRACT NO. 60L39		
FED. ROAD DIST. NO. 1	ILLINOIS	FED. AID PROJECT		

2:35:28 PM
p:\01345\beam and bearing fabrication\55c2tsedata2.dgn
8/5/2010

STATE OF ILLINOIS
DEPARTMENT OF TRANSPORTATION

GIRDER G8

LOCATION	STATION	OFFSET	THEORETICAL GRADE ELEVATIONS	THEORETICAL GRADE ELEVATIONS ADJUSTED FOR DEAD LOAD DEFLECTIONS
℄ C. Abut. 1	18+32.81	23.63	627.39	627.39
℄ N. Brg. C. Abut 1	18+34.42	23.63	627.42	627.42
A	18+44.42	23.63	627.61	627.63
B	18+54.42	23.63	627.79	627.83
C	18+64.42	23.63	627.97	628.01
D	18+74.42	23.63	628.13	628.18
E	18+84.42	23.63	628.29	628.32
F	18+94.42	23.63	628.44	628.46
℄ Brg. C. Abut. 2	19+07.85	23.63	628.63	628.63
G	19+17.85	23.63	628.77	628.77
H	19+27.85	23.63	628.89	628.91
I	19+37.85	23.63	629.01	629.04
J	19+47.85	23.63	629.12	629.16
K	19+57.85	23.63	629.22	629.26
L	19+67.85	23.63	629.31	629.35
M	19+77.85	23.63	629.40	629.42
N	19+87.85	23.63	629.48	629.48
℄ Brg. Pier 6	19+95.81	23.63	629.53	629.53
O	20+05.81	23.63	629.60	629.60
P	20+15.81	23.63	629.65	629.67
Q	20+25.81	23.63	629.70	629.74
R	20+35.81	23.63	629.74	629.78
S	20+45.81	23.63	629.78	629.82
T	20+55.81	23.63	629.81	629.85
U	20+65.81	23.63	629.85	629.87
V	20+75.81	23.63	629.89	629.89
℄ Brg. C. Abut. 3	20+83.77	23.63	629.92	629.92
W	20+93.77	23.63	629.95	629.96
X	21+03.77	23.63	629.99	630.02
Y	21+13.77	23.63	630.03	630.07
Z	21+23.77	23.63	630.07	630.11
A1	21+33.77	23.63	630.10	630.15
B1	21+43.77	23.63	630.14	630.17
℄ S. Brg. C. Abut. 4	21+57.20	23.63	630.18	630.18
℄ C. Abut. 4	21+58.81	23.63	630.19	630.19

GIRDER G9

LOCATION	STATION	OFFSET	THEORETICAL GRADE ELEVATIONS	THEORETICAL GRADE ELEVATIONS ADJUSTED FOR DEAD LOAD DEFLECTIONS
℄ C. Abut. 1	18+30.13	16.88	627.44	627.44
℄ N. Brg. C. Abut 1	18+31.74	16.88	627.47	627.47
A	18+41.74	16.88	627.66	627.68
B	18+51.74	16.88	627.85	627.89
C	18+61.74	16.88	628.02	628.07
D	18+71.74	16.88	628.19	628.23
E	18+81.74	16.88	628.35	628.38
F	18+91.74	16.88	628.50	628.52
℄ Brg. C. Abut. 2	19+05.17	16.88	628.70	628.70
G	19+15.17	16.88	628.83	628.84
H	19+25.17	16.88	628.96	628.98
I	19+35.17	16.88	629.08	629.11
J	19+45.17	16.88	629.19	629.23
K	19+55.17	16.88	629.29	629.34
L	19+65.17	16.88	629.39	629.42
M	19+75.17	16.88	629.48	629.50
N	19+85.17	16.88	629.56	629.56
℄ Brg. Pier 6	19+93.13	16.88	629.61	629.61
O	20+03.13	16.88	629.68	629.69
P	20+13.13	16.88	629.74	629.76
Q	20+23.13	16.88	629.79	629.82
R	20+33.13	16.88	629.83	629.87
S	20+43.13	16.88	629.87	629.91
T	20+53.13	16.88	629.90	629.94
U	20+63.13	16.88	629.94	629.96
V	20+73.13	16.88	629.98	629.98
℄ Brg. C. Abut. 3	20+81.09	16.88	630.01	630.01
W	20+91.09	16.88	630.05	630.05
X	21+01.09	16.88	630.08	630.11
Y	21+11.09	16.88	630.12	630.16
Z	21+21.09	16.88	630.16	630.20
A1	21+31.09	16.88	630.19	630.24
B1	21+41.09	16.88	630.23	630.26
℄ S. Brg. C. Abut. 4	21+54.52	16.88	630.28	630.28
℄ C. Abut. 4	21+56.13	16.88	630.28	630.28

GIRDER G10

LOCATION	STATION	OFFSET	THEORETICAL GRADE ELEVATIONS	THEORETICAL GRADE ELEVATIONS ADJUSTED FOR DEAD LOAD DEFLECTIONS
℄ C. Abut. 1	18+27.44	10.13	627.49	627.49
℄ N. Brg. C. Abut 1	18+29.06	10.13	627.52	627.52
A	18+39.06	10.13	627.71	627.73
B	18+49.06	10.13	627.90	627.94
C	18+59.06	10.13	628.08	628.12
D	18+69.06	10.13	628.25	628.29
E	18+79.06	10.13	628.41	628.44
F	18+89.06	10.13	628.57	628.58
℄ Brg. C. Abut. 2	19+02.49	10.13	628.76	628.76
G	19+12.49	10.13	628.90	628.91
H	19+22.49	10.13	629.03	629.05
I	19+32.49	10.13	629.15	629.18
J	19+42.49	10.13	629.26	629.31
K	19+52.49	10.13	629.37	629.41
L	19+62.49	10.13	629.47	629.50
M	19+72.49	10.13	629.55	629.57
N	19+82.49	10.13	629.64	629.64
℄ Brg. Pier 6	19+90.45	10.13	629.70	629.70
O	20+00.45	10.13	629.76	629.77
P	20+10.45	10.13	629.82	629.85
Q	20+20.45	10.13	630.14	630.17
R	20+30.45	10.13	629.92	629.97
S	20+40.45	10.13	629.96	630.00
T	20+50.45	10.13	630.00	630.03
U	20+60.45	10.13	630.03	630.05
V	20+70.45	10.13	630.07	630.08
℄ Brg. C. Abut. 3	20+78.40	10.13	630.10	630.10
W	20+88.40	10.13	630.14	630.15
X	20+98.40	10.13	630.17	630.20
Y	21+08.40	10.13	630.21	630.25
Z	21+18.40	10.13	630.25	630.29
A1	21+28.40	10.13	630.28	630.33
B1	21+38.40	10.13	630.32	630.35
℄ S. Brg. C. Abut. 4	21+51.83	10.13	630.37	630.37
℄ C. Abut. 4	21+53.45	10.13	630.38	630.38

GIRDER G11

LOCATION	STATION	OFFSET	THEORETICAL GRADE ELEVATIONS	THEORETICAL GRADE ELEVATIONS ADJUSTED FOR DEAD LOAD DEFLECTIONS
℄ C. Abut. 1	18+24.76	3.38	627.53	627.53
℄ N. Brg. C. Abut 1	18+26.37	3.38	627.57	627.57
A	18+36.37	3.38	627.76	627.78
B	18+46.37	3.38	627.95	627.99
C	18+56.37	3.38	628.13	628.18
D	18+66.37	3.38	628.30	628.35
E	18+76.37	3.38	628.47	628.50
F	18+86.37	3.38	628.63	628.64
℄ Brg. C. Abut. 2	18+99.80	3.38	628.82	628.82
G	19+09.80	3.38	628.96	628.97
H	19+19.80	3.38	629.09	629.12
I	19+29.80	3.38	629.22	629.25
J	19+39.80	3.38	629.33	629.38
K	19+49.80	3.38	629.44	629.48
L	19+59.80	3.38	629.54	629.57
M	19+69.80	3.38	629.63	629.65
N	19+79.80	3.38	629.72	629.72
℄ Brg. Pier 6	19+87.76	3.38	629.78	629.78
O	19+97.76	3.38	629.85	629.86
P	20+07.76	3.38	629.91	629.93
Q	20+17.76	3.38	629.96	630.00
R	20+27.76	3.38	630.01	630.06
S	20+37.76	3.38	630.05	630.09
T	20+47.76	3.38	630.09	630.12
U	20+57.76	3.38	630.12	630.14
V	20+67.76	3.38	630.16	630.17
℄ Brg. C. Abut. 3	20+75.72	3.38	630.19	630.19
W	20+85.72	3.38	630.23	630.24
X	20+95.72	3.38	630.27	630.29
Y	21+05.72	3.38	630.30	630.34
Z	21+15.72	3.38	630.34	630.39
A1	21+25.72	3.38	630.38	630.42
B1	21+35.72	3.38	630.41	630.44
℄ S. Brg. C. Abut. 4	21+49.15	3.38	630.46	630.46
℄ C. Abut. 4	21+50.76	3.38	630.47	630.47

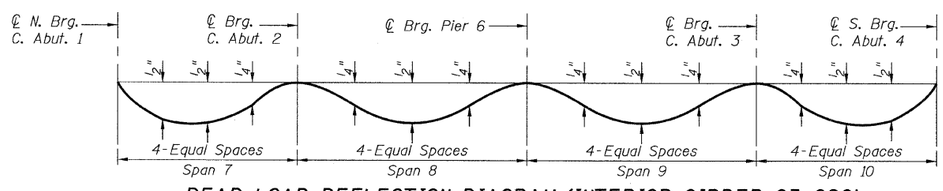

DEAD LOAD DEFLECTION DIAGRAM (INTERIOR GIRDER G3-G20)

(includes weight of concrete only)

Note: The above deflections are not to be used in the field if the engineer is working from the grade elevations adjusted for dead load deflections as shown above.

TOP OF SLAB ELEV. - 3
CENTRAL / I-55
STRUCTURE NO. 016-0724

TYLIN INTERNATIONAL

DESIGNED	EKH
CHECKED	AMD.
DRAWN	EKH
CHECKED	AMD.
DATE	08/02/10

REVISIONS	
NAME	DATE

SHEET NO. 17
137 SHEETS

F.A.I RTE.	SECTION	COUNTY	TOTAL SHEETS	SHEET NO.
55	0711.2R & 1011.1BR	COOK	200	47
		CONTRACT NO. 60L39		
FED. ROAD DIST. NO. 1	ILLINOIS	FED. AID PROJECT		

p:\01345\beam and bearing fabrication\i55c2sedata3.dgn 2:22:51 PM

8/2/2010

STATE OF ILLINOIS
DEPARTMENT OF TRANSPORTATION

GIRDER G12

LOCATION	STATION	OFFSET	THEORETICAL GRADE ELEVATIONS	THEORETICAL GRADE ELEVATIONS ADJUSTED FOR DEAD LOAD DEFLECTIONS
℄ C. Abut. 1	18+22.08	-3.38	627.48	627.48
℄ N. Brg.	18+23.69	-3.38	627.51	627.51
C. Abut 1				
A	18+33.69	-3.38	627.71	627.73
B	18+43.69	-3.38	627.90	627.94
C	18+53.69	-3.38	628.08	628.13
D	18+63.69	-3.38	628.26	628.30
E	18+73.69	-3.38	628.43	628.46
F	18+83.69	-3.38	628.58	628.60
℄ Brg.	18+97.12	-3.38	628.79	628.79
C. Abut. 2				
G	19+07.12	-3.38	628.93	628.93
H	19+17.12	-3.38	629.06	629.08
I	19+27.12	-3.38	629.19	629.22
J	19+37.12	-3.38	629.30	629.35
K	19+47.12	-3.38	629.41	629.46
L	19+57.12	-3.38	629.51	629.55
M	19+67.12	-3.38	629.61	629.63
N	19+77.12	-3.38	629.70	629.70
℄ Brg. Pier 6	19+85.08	-3.38	629.76	629.76
O	19+95.08	-3.38	629.83	629.84
P	20+05.08	-3.38	629.89	629.92
Q	20+15.08	-3.38	629.95	629.99
R	20+25.08	-3.38	630.00	630.04
S	20+35.08	-3.38	630.04	630.08
T	20+45.08	-3.38	630.08	630.11
U	20+55.08	-3.38	630.11	630.13
V	20+65.08	-3.38	630.15	630.16
℄ Brg.	20+73.04	-3.38	630.18	630.18
C. Abut. 3				
W	20+83.04	-3.38	630.22	630.23
X	20+93.04	-3.38	630.26	630.28
Y	21+03.04	-3.38	630.29	630.33
Z	21+13.04	-3.38	630.33	630.38
A1	21+23.04	-3.38	630.37	630.41
B1	21+33.04	-3.38	630.40	630.43
℄ S. Brg.	21+46.47	-3.38	630.45	630.45
C. Abut. 4				
℄ C. Abut. 4	21+48.08	-3.38	630.46	630.46

GIRDER G13

LOCATION	STATION	OFFSET	THEORETICAL GRADE ELEVATIONS	THEORETICAL GRADE ELEVATIONS ADJUSTED FOR DEAD LOAD DEFLECTIONS
℄ C. Abut. 1	18+19.39	-10.13	627.32	627.32
℄ N. Brg.	18+21.01	-10.13	627.36	627.36
C. Abut 1				
A	18+31.01	-10.13	627.56	627.58
B	18+41.01	-10.13	627.75	627.79
C	18+51.01	-10.13	627.93	627.98
D	18+61.01	-10.13	628.11	628.15
E	18+71.01	-10.13	628.28	628.31
F	18+81.01	-10.13	628.44	628.46
℄ Brg.	18+94.44	-10.13	628.65	628.65
C. Abut. 2				
G	19+04.44	-10.13	628.79	628.80
H	19+14.44	-10.13	628.92	628.95
I	19+24.44	-10.13	629.05	629.09
J	19+34.44	-10.13	629.17	629.21
K	19+44.44	-10.13	629.28	629.33
L	19+54.44	-10.13	629.39	629.42
M	19+64.44	-10.13	629.50	629.52
N	19+74.44	-10.13	629.57	629.58
℄ Brg. Pier 6	19+82.40	-10.13	629.64	629.64
O	19+92.40	-10.13	629.71	629.72
P	20+02.40	-10.13	629.78	629.80
Q	20+12.40	-10.13	629.84	629.87
R	20+22.40	-10.13	629.89	629.93
S	20+32.40	-10.13	629.93	629.97
T	20+42.40	-10.13	629.97	630.00
U	20+52.40	-10.13	630.00	630.02
V	20+62.40	-10.13	630.04	630.05
℄ Brg.	20+70.35	-10.13	630.07	630.07
C. Abut. 3				
W	20+80.35	-10.13	630.11	630.12
X	20+90.35	-10.13	630.14	630.17
Y	21+00.35	-10.13	630.18	630.22
Z	21+10.35	-10.13	630.22	630.26
A1	21+20.35	-10.13	630.25	630.30
B1	21+30.35	-10.13	630.29	630.32
℄ S. Brg.	21+43.78	-10.13	630.34	630.34
C. Abut. 4				
℄ C. Abut. 4	21+45.40	-10.13	630.35	630.35

GIRDER G14

LOCATION	STATION	OFFSET	THEORETICAL GRADE ELEVATIONS	THEORETICAL GRADE ELEVATIONS ADJUSTED FOR DEAD LOAD DEFLECTIONS
℄ C. Abut. 1	18+16.71	-16.88	627.17	627.17
℄ N. Brg.	18+18.32	-16.88	627.20	627.20
C. Abut 1				
A	18+28.32	-16.88	627.40	627.42
B	18+38.32	-16.88	627.60	627.64
C	18+48.32	-16.88	627.78	627.83
D	18+58.32	-16.88	627.96	628.01
E	18+68.32	-16.88	628.13	628.16
F	18+78.32	-16.88	628.30	628.31
℄ Brg.	18+91.75	-16.88	628.50	628.50
C. Abut. 2				
G	19+01.75	-16.88	628.65	628.66
H	19+11.75	-16.88	628.79	628.81
I	19+21.75	-16.88	628.92	628.95
J	19+31.75	-16.88	629.04	629.08
K	19+41.75	-16.88	629.15	629.20
L	19+51.75	-16.88	629.26	629.29
M	19+61.75	-16.88	629.36	629.38
N	19+71.75	-16.88	629.45	629.45
℄ Brg. Pier 6	19+79.71	-16.88	629.51	629.51
O	19+89.71	-16.88	629.59	629.60
P	19+99.71	-16.88	629.66	629.68
Q	20+09.71	-16.88	629.72	629.76
R	20+19.71	-16.88	629.77	629.82
S	20+29.71	-16.88	629.82	629.86
T	20+39.71	-16.88	629.86	629.89
U	20+49.71	-16.88	629.89	629.91
V	20+59.71	-16.88	629.93	629.93
℄ Brg.	20+67.67	-16.88	629.96	629.96
C. Abut. 3				
W	20+77.67	-16.88	630.00	630.00
X	20+87.67	-16.88	630.03	630.06
Y	20+97.67	-16.88	630.07	630.11
Z	21+07.67	-16.88	630.11	630.15
A1	21+17.67	-16.88	630.14	630.19
B1	21+27.67	-16.88	630.18	630.21
℄ S. Brg.	21+41.10	-16.88	630.23	630.23
C. Abut. 4				
℄ C. Abut. 4	21+42.72	-16.88	630.24	630.24

GIRDER G15

LOCATION	STATION	OFFSET	THEORETICAL GRADE ELEVATIONS	THEORETICAL GRADE ELEVATIONS ADJUSTED FOR DEAD LOAD DEFLECTIONS
℄ C. Abut. 1	18+14.03	-23.63	627.01	627.01
℄ N. Brg.	18+15.64	-23.63	627.04	627.04
C. Abut 1				
A	18+25.64	-23.63	627.25	627.27
B	18+35.64	-23.63	627.44	627.48
C	18+45.64	-23.63	627.63	627.68
D	18+55.64	-23.63	627.81	627.86
E	18+65.64	-23.63	627.99	628.02
F	18+75.64	-23.63	628.15	628.17
℄ Brg.	18+89.07	-23.63	628.36	628.36
C. Abut. 2				
G	18+99.07	-23.63	628.51	628.52
H	19+09.07	-23.63	628.65	628.67
I	19+19.07	-23.63	628.78	628.82
J	19+29.07	-23.63	628.91	628.95
K	19+39.07	-23.63	629.02	629.06
L	19+49.07	-23.63	629.13	629.16
M	19+59.07	-23.63	629.23	629.25
N	19+69.07	-23.63	629.32	629.33
℄ Brg. Pier 6	19+77.03	-23.63	629.39	629.39
O	19+87.03	-23.63	629.47	629.48
P	19+97.03	-23.63	629.54	629.56
Q	20+07.03	-23.63	629.60	629.64
R	20+17.03	-23.63	629.66	629.70
S	20+27.03	-23.63	629.70	629.75
T	20+37.03	-23.63	629.74	629.78
U	20+47.03	-23.63	629.78	629.80
V	20+57.03	-23.63	629.82	629.82
℄ Brg.	20+64.99	-23.63	629.85	629.85
C. Abut. 3				
W	20+74.99	-23.63	629.88	629.89
X	20+84.99	-23.63	629.92	629.95
Y	20+94.99	-23.63	629.96	630.00
Z	21+04.99	-23.63	630.00	630.04
A1	21+14.99	-23.63	630.03	630.08
B1	21+24.99	-23.63	630.07	630.10
℄ S. Brg.	21+38.42	-23.63	630.12	630.12
C. Abut. 4				
℄ C. Abut. 4	21+40.03	-23.63	630.13	630.13

TOP OF SLAB ELEV. - 4
CENTRAL / I-55
STRUCTURE NO. 016-0724

T·Y·LIN INTERNATIONAL

DESIGNED - EKH	REVISIONS	
CHECKED - AMD,	NAME	DATE
DRAWN - EKH		
CHECKED - AMD,		
DATE - 08/02/10		

SHEET NO. 18
137 SHEETS

F.A.I RTE.	SECTION	COUNTY	TOTAL SHEETS	SHEET NO.
55	0711.2R & 1011.1BR	COOK	200	48
		CONTRACT NO. 60L39		
FED. ROAD DIST. NO. 1	ILLINOIS	FED. AID PROJECT		

8/2/2010

2:22:52 PM

e:\01345\beam and bearing fabrication\55c2tsedata4.dgn

STATE OF ILLINOIS
DEPARTMENT OF TRANSPORTATION

GIRDER G16

LOCATION	STATION	OFFSET	THEORETICAL GRADE ELEVATIONS	THEORETICAL GRADE ELEVATIONS ADJUSTED FOR DEAD LOAD DEFLECTIONS
℄ C. Abut. 1	18+11.34	-30.38	626.83	626.83
℄ N. Brg.	18+12.96	-30.38	626.87	626.87
C. Abut 1				
A	18+22.96	-30.38	627.07	627.10
B	18+32.96	-30.38	627.27	627.31
C	18+42.96	-30.38	627.47	627.51
D	18+52.96	-30.38	627.65	627.69
E	18+62.96	-30.38	627.82	627.85
F	18+72.96	-30.38	627.99	628.01
℄ Brg.	18+86.39	-30.38	628.20	628.20
C. Abut. 2				
G	18+96.39	-30.38	628.35	628.36
H	19+06.39	-30.38	628.50	628.52
I	19+16.39	-30.38	628.63	628.66
J	19+26.39	-30.38	628.76	628.80
K	19+36.39	-30.38	628.87	628.92
L	19+46.39	-30.38	628.98	629.02
M	19+56.39	-30.38	629.09	629.11
N	19+66.39	-30.38	629.18	629.19
℄ Brg. Pier 6	19+74.35	-30.38	629.25	629.25
O	19+84.35	-30.38	629.33	629.34
P	19+94.35	-30.38	629.40	629.43
Q	20+04.35	-30.38	629.47	629.50
R	20+14.35	-30.38	629.53	629.57
S	20+24.35	-30.38	629.57	629.62
T	20+34.35	-30.38	629.62	629.65
U	20+44.35	-30.38	629.65	629.67
V	20+54.35	-30.38	629.69	629.70
℄ Brg.	20+62.30	-30.38	629.72	629.72
C. Abut. 3				
W	20+72.30	-30.38	629.76	629.77
X	20+82.30	-30.38	629.79	629.82
Y	20+92.30	-30.38	629.83	629.87
Z	21+02.30	-30.38	629.87	629.91
A1	21+12.30	-30.38	629.90	629.95
B1	21+22.30	-30.38	629.94	629.97
℄ S. Brg.	21+35.73	-30.38	629.99	629.99
C. Abut. 4				
℄ C. Abut. 4	21+37.35	-30.38	630.00	630.00

GIRDER G17

LOCATION	STATION	OFFSET	THEORETICAL GRADE ELEVATIONS	THEORETICAL GRADE ELEVATIONS ADJUSTED FOR DEAD LOAD DEFLECTIONS
℄ C. Abut. 1	18+08.66	-37.13	626.64	626.64
℄ N. Brg.	18+10.27	-37.13	626.68	626.68
C. Abut 1				
A	18+20.27	-37.13	626.89	626.91
B	18+30.27	-37.13	627.09	627.13
C	18+40.27	-37.13	627.28	627.33
D	18+50.27	-37.13	627.46	627.51
E	18+60.27	-37.13	627.64	627.67
F	18+70.27	-37.13	627.81	627.83
℄ Brg.	18+83.70	-37.13	628.03	628.03
C. Abut. 2				
G	18+93.70	-37.13	628.18	628.19
H	19+03.70	-37.13	628.32	628.34
I	19+13.70	-37.13	628.46	628.49
J	19+23.70	-37.13	628.59	628.63
K	19+33.70	-37.13	628.71	628.75
L	19+43.70	-37.13	628.82	628.85
M	19+53.70	-37.13	628.92	628.94
N	19+63.70	-37.13	629.02	629.03
℄ Brg. Pier 6	19+71.66	-37.13	629.09	629.09
O	19+81.66	-37.13	629.17	629.18
P	19+91.66	-37.13	629.25	629.27
Q	20+01.66	-37.13	629.32	629.35
R	20+11.66	-37.13	629.38	629.42
S	20+21.66	-37.13	629.43	629.47
T	20+31.66	-37.13	629.47	629.50
U	20+41.66	-37.13	629.51	629.53
V	20+51.66	-37.13	629.55	629.55
℄ Brg.	20+59.62	-37.13	629.57	629.57
C. Abut. 3				
W	20+69.62	-37.13	629.61	629.62
X	20+79.62	-37.13	629.65	629.67
Y	20+89.62	-37.13	629.69	629.73
Z	20+99.62	-37.13	629.72	629.77
A1	21+09.62	-37.13	629.76	629.80
B1	21+19.62	-37.13	629.80	629.83
℄ S. Brg.	21+33.05	-37.13	629.85	629.85
C. Abut. 4				
℄ C. Abut. 4	21+34.67	-37.13	629.85	629.85

GIRDER G18

LOCATION	STATION	OFFSET	THEORETICAL GRADE ELEVATIONS	THEORETICAL GRADE ELEVATIONS ADJUSTED FOR DEAD LOAD DEFLECTIONS
℄ C. Abut. 1	18+05.98	-43.88	626.45	626.45
℄ N. Brg.	18+07.59	-43.88	626.48	626.48
C. Abut 1				
A	18+17.59	-43.88	626.69	626.72
B	18+27.59	-43.88	626.90	626.94
C	18+37.59	-43.88	627.09	627.14
D	18+47.59	-43.88	627.28	627.32
E	18+57.59	-43.88	627.46	627.49
F	18+67.59	-43.88	627.63	627.65
℄ Brg.	18+81.02	-43.88	627.85	627.85
C. Abut. 2				
G	18+91.02	-43.88	628.00	628.01
H	19+01.02	-43.88	628.15	628.17
I	19+11.02	-43.88	628.29	628.32
J	19+21.02	-43.88	628.42	628.46
K	19+31.02	-43.88	628.54	628.58
L	19+41.02	-43.88	628.66	628.69
M	19+51.02	-43.88	628.76	628.78
N	19+61.02	-43.88	628.86	628.87
℄ Brg. Pier 6	19+68.98	-43.88	628.93	628.93
O	19+78.98	-43.88	629.02	629.03
P	19+88.98	-43.88	629.10	629.12
Q	19+98.98	-43.88	629.16	629.20
R	20+08.98	-43.88	629.23	629.27
S	20+18.98	-43.88	629.28	629.32
T	20+28.98	-43.88	629.32	629.36
U	20+38.98	-43.88	629.36	629.38
V	20+48.98	-43.88	629.40	629.41
℄ Brg.	20+56.94	-43.88	629.43	629.43
C. Abut. 3				
W	20+66.94	-43.88	629.47	629.48
X	20+76.94	-43.88	629.50	629.53
Y	20+86.94	-43.88	629.54	629.58
Z	20+96.94	-43.88	629.58	629.62
A1	21+06.94	-43.88	629.61	629.66
B1	21+16.94	-43.88	629.65	629.68
℄ S. Brg.	21+30.37	-43.88	629.70	629.70
C. Abut. 4				
℄ C. Abut. 4	21+31.98	-43.88	629.71	629.71

GIRDER G19

LOCATION	STATION	OFFSET	THEORETICAL GRADE ELEVATIONS	THEORETICAL GRADE ELEVATIONS ADJUSTED FOR DEAD LOAD DEFLECTIONS
℄ C. Abut. 1	18+03.29	-50.63	626.26	626.26
℄ N. Brg.	18+04.91	-50.63	626.29	626.29
C. Abut 1				
A	18+14.91	-50.63	626.50	626.53
B	18+24.91	-50.63	626.71	626.75
C	18+34.91	-50.63	626.91	626.95
D	18+44.91	-50.63	627.10	627.14
E	18+54.91	-50.63	627.28	627.31
F	18+64.91	-50.63	627.45	627.47
℄ Brg.	18+78.34	-50.63	627.67	627.67
C. Abut. 2				
G	18+88.34	-50.63	627.83	627.84
H	18+98.34	-50.63	627.98	628.00
I	19+08.34	-50.63	628.12	628.15
J	19+18.34	-50.63	628.25	628.29
K	19+28.34	-50.63	628.37	628.42
L	19+38.34	-50.63	628.49	628.52
M	19+48.34	-50.63	628.60	628.62
N	19+58.34	-50.63	628.70	628.71
℄ Brg. Pier 6	19+66.30	-50.63	628.77	628.77
O	19+76.30	-50.63	628.86	628.87
P	19+86.30	-50.63	628.94	628.96
Q	19+96.30	-50.63	629.01	629.05
R	20+06.30	-50.63	629.08	629.12
S	20+16.30	-50.63	629.13	629.17
T	20+26.30	-50.63	629.18	629.21
U	20+36.30	-50.63	629.22	629.24
V	20+46.30	-50.63	629.26	629.26
℄ Brg.	20+54.25	-50.63	629.28	629.28
C. Abut. 3				
W	20+64.25	-50.63	629.32	629.33
X	20+74.25	-50.63	629.36	629.38
Y	20+84.25	-50.63	629.40	629.44
Z	20+94.25	-50.63	629.43	629.48
A1	21+04.25	-50.63	629.47	629.51
B1	21+14.25	-50.63	629.51	629.54
℄ S. Brg.	21+27.68	-50.63	629.56	629.56
C. Abut. 4				
℄ C. Abut. 4	21+29.30	-50.63	629.56	629.56

TOP OF SLAB ELEV. - 5
CENTRAL / I-55
STRUCTURE NO. 016-0724

T·Y·LIN INTERNATIONAL

DESIGNED - EKH	
CHECKED - AMD.	
DRAWN - EKH	
CHECKED - AMD.	
DATE - 08/02/10	

REVISIONS

NAME	DATE

SHEET NO. 19
137 SHEETS

F.A.I RTE.	SECTION	COUNTY	TOTAL SHEETS	SHEET NO.
55	0711.2R & 1011.1BR	COOK	200	49
		CONTRACT NO. 60L39		
FED. ROAD DIST. NO. 1	ILLINOIS	FED. AID PROJECT		

8/2/2010

p:\01345\beam and bearing fabrication\155c2tsedata5.dgn 2:22:53 PM

\\PW-Stsedata5.dgn 8/3/2010 3:22:53 PM

STATE OF ILLINOIS
DEPARTMENT OF TRANSPORTATION

GIRDER G20

LOCATION	STATION	OFFSET	THEORETICAL GRADE ELEVATIONS	THEORETICAL GRADE ELEVATIONS ADJUSTED FOR DEAD LOAD DEFLECTIONS
℄ C. Abut. 1	18+00.61	-57.38	626.06	626.06
℄ N. Brg.	18+02.22	-57.38	626.10	626.10
C. Abut 1				
A	18+12.22	-57.38	626.61	626.64
B	18+22.22	-57.38	626.52	626.56
C	18+32.22	-57.38	626.72	626.77
D	18+42.22	-57.38	626.91	626.95
E	18+52.22	-57.38	627.10	627.13
F	18+62.22	-57.38	627.27	627.29
℄ Brg.	18+75.65	-57.38	627.50	627.50
C. Abut. 2				
G	18+85.65	-57.38	627.65	627.66
H	18+95.65	-57.38	627.80	627.82
I	19+05.65	-57.38	627.95	627.98
J	19+15.65	-57.38	628.08	628.12
K	19+25.65	-57.38	628.21	628.25
L	19+35.65	-57.38	628.32	628.36
M	19+45.65	-57.38	628.44	628.45
N	19+55.65	-57.38	628.54	628.54
℄ Brg. Pier 6	19+63.61	-57.38	628.62	628.62
O	19+73.61	-57.38	628.70	628.71
P	19+83.61	-57.38	628.79	628.81
Q	19+93.61	-57.38	628.86	628.89
R	20+03.61	-57.38	628.92	628.97
S	20+13.61	-57.38	628.98	629.02
T	20+23.61	-57.38	629.03	629.06
U	20+33.61	-57.38	629.07	629.09
V	20+43.61	-57.38	629.11	629.12
℄ Brg.	20+51.57	-57.38	629.14	629.14
C. Abut. 3				
W	20+61.57	-57.38	629.18	629.19
X	20+71.57	-57.38	629.21	629.24
Y	20+81.57	-57.38	629.25	629.29
Z	20+91.57	-57.38	629.29	629.33
A1	21+01.57	-57.38	629.32	629.37
B1	21+11.57	-57.38	629.36	629.39
℄ S. Brg.	21+25.00	-57.38	629.41	629.41
C. Abut. 4				
℄ C. Abut. 4	21+26.62	-57.38	629.42	629.42

GIRDER G21

LOCATION	STATION	OFFSET	THEORETICAL GRADE ELEVATIONS	THEORETICAL GRADE ELEVATIONS ADJUSTED FOR DEAD LOAD DEFLECTIONS
℄ C. Abut. 1	17+97.93	-64.13	625.87	625.87
℄ N. Brg.	17+99.54	-64.13	625.90	625.90
C. Abut 1				
A	18+09.54	-64.13	626.12	626.13
B	18+19.54	-64.13	626.33	626.34
C	18+29.54	-64.13	626.53	626.54
D	18+39.54	-64.13	626.73	626.74
E	18+49.54	-64.13	626.91	626.92
F	18+59.54	-64.13	627.09	627.09
℄ Brg.	18+72.97	-64.13	627.32	627.32
C. Abut. 2				
G	18+82.97	-64.13	627.48	627.47
H	18+92.97	-64.13	627.63	627.62
I	19+02.97	-64.13	627.77	627.77
J	19+12.97	-64.13	627.91	627.91
K	19+22.97	-64.13	628.04	628.04
L	19+32.97	-64.13	628.16	628.16
M	19+42.97	-64.13	628.27	628.27
N	19+52.97	-64.13	628.38	628.38
℄ Brg. Pier 6	19+60.93	-64.13	628.45	628.45
O	19+70.93	-64.13	628.55	628.55
P	19+80.93	-64.13	628.63	628.63
Q	19+90.93	-64.13	628.70	628.71
R	20+00.93	-64.13	628.77	628.77
S	20+10.93	-64.13	628.83	628.83
T	20+20.93	-64.13	628.88	628.88
U	20+30.93	-64.13	628.93	628.93
V	20+40.93	-64.13	628.97	628.96
℄ Brg.	20+48.89	-64.13	628.99	628.99
C. Abut. 3				
W	20+58.89	-64.13	629.03	629.03
X	20+68.89	-64.13	629.07	629.07
Y	20+78.89	-64.13	629.11	629.11
Z	20+88.89	-64.13	629.14	629.15
A1	20+98.89	-64.13	629.18	629.18
B1	21+08.89	-64.13	629.22	629.22
℄ S. Brg.	21+22.32	-64.13	629.27	629.27
C. Abut. 4				
℄ C. Abut. 4	21+23.93	-64.13	629.27	629.27

S.B. CONST. JOINT

LOCATION	STATION	OFFSET	THEORETICAL GRADE ELEVATIONS	THEORETICAL GRADE ELEVATIONS ADJUSTED FOR DEAD LOAD DEFLECTIONS
℄ C. Abut. 1	18+49.27	-65.13	626.88	626.88
℄ N. Brg.	18+50.89	-65.13	626.91	626.91
C. Abut 1				
A	18+60.89	-65.13	627.09	627.10
B	18+70.89	-65.13	627.26	627.27
C	18+80.89	-65.13	627.42	627.43
D	18+90.89	-65.13	627.58	627.59
E	19+00.89	-65.13	627.72	627.73
F	19+10.89	-65.13	627.86	627.87
℄ Brg.	19+24.32	-65.13	628.03	628.03
C. Abut. 2				
G	19+34.32	-65.13	628.15	628.15
H	19+44.32	-65.13	628.26	628.26
I	19+54.32	-65.13	628.37	628.37
J	19+64.32	-65.13	628.46	628.46
K	19+74.32	-65.13	628.55	628.55
L	19+84.32	-65.13	628.63	628.63
M	19+94.32	-65.13	628.71	628.71
N	20+04.32	-65.13	628.77	628.77
℄ Brg. Pier 6	20+12.28	-65.13	628.82	628.82
O	20+22.28	-65.13	628.87	628.87
P	20+32.28	-65.13	628.91	628.91
Q	20+42.28	-65.13	628.95	628.95
R	20+52.28	-65.13	628.98	628.98
S	20+62.28	-65.13	629.02	629.02
T	20+72.28	-65.13	629.06	629.06
U	20+82.28	-65.13	629.10	629.10
V	20+92.28	-65.13	629.13	629.13
℄ Brg.	21+00.23	-65.13	359.16	359.16
C. Abut. 3				
W	21+10.23	-65.13	629.20	629.20
X	21+20.23	-65.13	629.24	629.24
Y	21+30.23	-65.13	629.27	629.27
Z	21+40.23	-65.13	629.31	629.31
A1	21+50.23	-65.13	629.35	629.35
B1	21+60.23	-65.13	629.38	629.38
℄ S. Brg.	21+73.67	-65.13	629.42	629.42
C. Abut. 4				
℄ C. Abut. 4	21+75.28	-65.13	629.42	629.42

GIRDER G22

LOCATION	STATION	OFFSET	THEORETICAL GRADE ELEVATIONS	THEORETICAL GRADE ELEVATIONS ADJUSTED FOR DEAD LOAD DEFLECTIONS
℄ C. Abut. 1	17+95.06	-71.42	625.66	625.66
℄ N. Brg.	17+96.68	-71.42	625.69	625.69
C. Abut 1				
A	18+06.68	-71.42	625.91	625.92
B	18+16.68	-71.42	626.13	626.14
C	18+26.68	-71.42	626.33	626.35
D	18+36.68	-71.42	626.53	626.54
E	18+46.68	-71.42	626.71	626.73
F	18+56.68	-71.42	626.89	626.90
℄ Brg.	18+70.11	-71.42	627.12	627.12
C. Abut. 2				
G	18+80.11	-71.42	627.29	627.29
H	18+90.11	-71.42	627.44	627.45
I	19+00.11	-71.42	627.59	627.61
J	19+10.11	-71.42	627.73	627.75
K	19+20.11	-71.42	627.86	627.88
L	19+30.11	-71.42	627.98	628.00
M	19+40.11	-71.42	628.09	628.11
N	19+50.11	-71.42	628.20	628.21
℄ Brg. Pier 6	19+58.07	-71.42	628.28	628.28
O	19+68.07	-71.42	628.37	628.38
P	19+78.07	-71.42	628.46	628.47
Q	19+88.07	-71.42	628.54	628.53
R	19+98.07	-71.42	628.61	628.62
S	20+08.07	-71.42	628.67	628.68
T	20+18.07	-71.42	628.72	628.73
U	20+28.07	-71.42	628.77	628.78
V	20+38.07	-71.42	628.81	628.81
℄ Brg.	20+46.02	-71.42	628.84	628.84
C. Abut. 3				
W	20+56.02	-71.42	628.88	628.88
X	20+66.02	-71.42	628.91	628.93
Y	20+76.02	-71.42	628.95	628.98
Z	20+86.02	-71.42	628.99	629.01
A1	20+96.02	-71.42	629.02	629.05
B1	21+06.02	-71.42	629.06	629.08
℄ S. Brg.	21+19.46	-71.42	629.11	629.11
C. Abut. 4				
℄ C. Abut. 4	21+21.07	-71.42	629.12	629.12

℄ CENTRAL AVE. P.G.L.

LOCATION	STATION	OFFSET	THEORETICAL GRADE ELEVATIONS	THEORETICAL GRADE ELEVATIONS ADJUSTED FOR DEAD LOAD DEFLECTIONS
℄ C. Abut. 1	18+23.42	0.00	627.56	627.56
℄ N. Brg.	18+25.03	0.00	627.59	627.59
C. Abut 1				
A	18+35.03	0.00	627.79	627.81
B	18+45.03	0.00	627.98	628.02
C	18+55.03	0.00	628.16	628.20
D	18+65.03	0.00	628.33	628.37
E	18+75.03	0.00	628.50	628.53
F	18+85.03	0.00	628.66	628.67
℄ Brg.	18+98.46	0.00	628.86	628.86
C. Abut. 2				
G	19+08.46	0.00	629.00	629.00
H	19+18.46	0.00	629.13	629.15
I	19+28.46	0.00	629.25	629.29
J	19+38.46	0.00	629.37	629.41
K	19+48.46	0.00	629.48	629.52
L	19+58.46	0.00	629.58	629.61
M	19+68.46	0.00	629.67	629.69
N	19+78.46	0.00	629.76	629.76

℄ CENTRAL AVE. P.G.L.

LOCATION	STATION	OFFSET	THEORETICAL GRADE ELEVATIONS	THEORETICAL GRADE ELEVATIONS ADJUSTED FOR DEAD LOAD DEFLECTIONS
℄ Brg. Pier 6	19+86.42	0.00	629.82	629.82
O	19+96.42	0.00	629.89	629.90
P	20+06.42	0.00	629.95	629.98
Q	20+16.42	0.00	630.01	630.04
R	20+26.42	0.00	630.06	630.10
S	20+36.42	0.00	630.10	630.14
T	20+46.42	0.00	630.13	630.17
U	20+56.42	0.00	630.17	630.19
V	20+66.42	0.00	630.21	630.21
℄ Brg.	20+74.38	0.00	630.24	630.24
C. Abut. 3				
W	20+84.38	0.00	630.27	630.28
X	20+94.38	0.00	630.31	630.34
Y	21+04.38	0.00	630.35	630.39
Z	21+14.38	0.00	630.38	630.43
A1	21+24.38	0.00	630.42	630.47
B1	21+34.38	0.00	630.46	630.49
℄ S. Brg.	21+47.81	0.00	630.51	630.51
C. Abut. 4				
℄ C. Abut. 4	21+49.42	0.00	630.51	630.51

TOP OF SLAB ELEV. - 6
CENTRAL/I-55
STRUCTURE NO. 016-0724

TYLIN INTERNATIONAL

DESIGNED -	JF, EKH
CHECKED -	AMD,
DRAWN -	JPM, EKH
CHECKED -	AMD,
DATE -	08/02/10

REVISIONS	
NAME	DATE

SHEET NO. 20
137 SHEETS

F.A.I RTE.	SECTION	COUNTY	TOTAL SHEETS	SHEET NO.
55	0711.2R & 1011.1BR	COOK	200	50
		CONTRACT NO. 60L39		
FED. ROAD DIST. NO. 1	ILLINOIS	FED. AID PROJECT		

2:22:54 PM
p:\01345\beam and bearing fabrication\55c2tsedata6.dgn
8/2/2010

STATE OF ILLINOIS
DEPARTMENT OF TRANSPORTATION

GIRDER G1.1

LOCATION	STATION	OFFSET	THEORETICAL GRADE ELEVATIONS	THEORETICAL GRADE ELEVATIONS ADJUSTED FOR DEAD LOAD DEFLECTIONS
℄ FB-1.12	197+79.39	-21.50	624.24	624.28
Y	197+86.33	-21.50	624.38	624.42
Z	197+96.33	-21.50	624.58	624.61
A1	198+06.33	-21.50	624.77	624.79
B1	198+16.33	-21.50	624.97	624.98
C1	198+26.33	-21.50	625.17	625.17
℄ R1 Pier	198+39.33	-21.50	625.42	625.42
D1	198+49.33	-21.50	625.61	625.62
E1	198+59.33	-21.50	625.80	625.82
F1	198+69.33	-21.50	625.98	626.01
G1	198+79.33	-21.50	626.17	626.21
H1	198+89.33	-21.50	626.36	626.39
I1	198+99.33	-21.50	626.54	626.58
J1	199+09.33	-21.50	626.73	626.75
K1	199+19.33	-21.50	626.92	626.96
L1	199+29.33	-21.50	627.10	627.13
℄ G22	199+31.70	-21.50	627.15	627.15

GIRDER G1.2

LOCATION	STATION	OFFSET	THEORETICAL GRADE ELEVATIONS	THEORETICAL GRADE ELEVATIONS ADJUSTED FOR DEAD LOAD DEFLECTIONS
Bk. of R1 Abut.	197+33.33	-15.00	623.25	623.25
℄ Joint R1 Abut.	197+35.58	-15.00	623.29	623.29
℄ E. Brg. R1 Abut.	197+36.33	-15.00	623.31	623.31
U	197+46.33	-15.00	623.50	623.53
V	197+56.33	-15.00	623.70	623.75
W	197+66.33	-15.00	623.90	623.98
X	197+76.33	-15.00	624.09	624.18
Y	197+86.33	-15.00	624.29	624.38
Z	197+96.33	-15.00	624.49	624.57
A1	198+06.33	-15.00	624.68	624.74
B1	198+16.33	-15.00	624.88	624.92
C1	198+26.33	-15.00	625.08	625.10
℄ R1 Pier	198+39.33	-15.00	625.33	625.33
D1	198+49.33	-15.00	625.52	625.52
E1	198+59.33	-15.00	625.71	625.71
F1	198+69.33	-15.00	625.90	625.91
G1	198+79.33	-15.00	626.09	626.11
H1	198+89.33	-15.00	626.28	626.30
I1	198+99.33	-15.00	626.47	626.49
J1	199+09.33	-15.00	626.66	626.68
K1	199+19.33	-15.00	626.85	626.86
℄ G22	199+29.12	-15.00	627.04	627.04

GIRDER G1.3

LOCATION	STATION	OFFSET	THEORETICAL GRADE ELEVATIONS	THEORETICAL GRADE ELEVATIONS ADJUSTED FOR DEAD LOAD DEFLECTIONS
Bk. of R1 Abut.	197+33.33	-8.50	623.15	623.15
℄ Joint R1 Abut.	197+35.58	-8.50	623.19	623.19
℄ E. Brg. R1 Abut.	197+36.33	-8.50	623.21	623.21
U	197+46.33	-8.50	623.40	623.43
V	197+56.33	-8.50	623.60	623.65
W	197+66.33	-8.50	623.80	623.88
X	197+76.33	-8.50	623.99	624.08
Y	197+86.33	-8.50	624.19	624.28
Z	197+96.33	-8.50	624.39	624.47
A1	198+06.33	-8.50	624.58	624.65
B1	198+16.33	-8.50	624.78	624.83
C1	198+26.33	-8.50	624.98	625.01
℄ R1 Pier	198+39.33	-8.50	625.23	625.24
D1	198+49.33	-8.50	625.42	625.43
E1	198+59.33	-8.50	625.61	625.63
F1	198+69.33	-8.50	625.81	625.83
G1	198+79.33	-8.50	626.00	626.03
H1	198+89.33	-8.50	626.20	626.22
I1	198+99.33	-8.50	626.39	626.41
J1	199+09.33	-8.50	626.58	626.60
K1	199+19.33	-8.50	626.78	626.79
℄ G22	199+26.54	-8.50	626.92	626.93

GIRDER G1.4

LOCATION	STATION	OFFSET	THEORETICAL GRADE ELEVATIONS	THEORETICAL GRADE ELEVATIONS ADJUSTED FOR DEAD LOAD DEFLECTIONS
Bk. of R1 Abut.	197+33.33	-2.00	623.05	623.05
℄ Joint R1 Abut.	197+35.58	-2.00	623.09	623.09
℄ E. Brg. R1 Abut.	197+36.33	-2.00	623.11	623.11
U	197+46.33	-2.00	623.30	623.34
V	197+56.33	-2.00	623.50	623.56
W	197+66.33	-2.00	623.70	623.78
X	197+76.33	-2.00	623.89	623.99
Y	197+86.33	-2.00	624.09	624.19
Z	197+96.33	-2.00	624.29	624.38
A1	198+06.33	-2.00	624.48	624.56
B1	198+16.33	-2.00	624.68	624.74
C1	198+26.33	-2.00	624.88	624.91
℄ R1 Pier	198+39.33	-2.00	625.13	625.15
D1	198+49.33	-2.00	625.33	625.34
E1	198+59.33	-2.00	625.52	625.54
F1	198+69.33	-2.00	625.72	625.74
G1	198+79.33	-2.00	625.91	625.94
H1	198+89.33	-2.00	626.11	626.14
I1	198+99.33	-2.00	626.30	626.33
J1	199+09.33	-2.00	626.50	626.52
K1	199+19.33	-2.00	626.69	626.71
℄ G22	199+23.95	-2.00	626.79	626.80

GIRDER G1.5

LOCATION	STATION	OFFSET	THEORETICAL GRADE ELEVATIONS	THEORETICAL GRADE ELEVATIONS ADJUSTED FOR DEAD LOAD DEFLECTIONS
Bk. of R1 Abut.	197+33.33	4.50	622.95	622.95
℄ Joint R1 Abut.	197+35.58	4.50	622.99	622.99
℄ E. Brg. R1 Abut.	197+36.33	4.50	623.01	623.01
U	197+46.33	4.50	623.21	623.24
V	197+56.33	4.50	623.40	623.46
W	197+66.33	4.50	623.60	623.68
X	197+76.33	4.50	623.80	623.89
Y	197+86.33	4.50	623.99	624.09
Z	197+96.33	4.50	624.19	624.28
A1	198+06.33	4.50	624.39	624.46
B1	198+16.33	4.50	624.58	624.64
C1	198+26.33	4.50	624.78	624.82
℄ R1 Pier	198+39.33	4.50	625.03	625.05
D1	198+49.33	4.50	625.23	625.25
E1	198+59.33	4.50	625.43	625.45
F1	198+69.33	4.50	625.63	625.65
G1	198+79.33	4.50	625.82	625.85
H1	198+89.33	4.50	626.02	626.05
I1	198+99.33	4.50	626.22	626.25
J1	199+09.33	4.50	626.42	626.44
K1	199+19.33	4.50	626.61	626.63
℄ G22	199+21.37	4.50	626.66	626.67

GIRDER G1.6

LOCATION	STATION	OFFSET	THEORETICAL GRADE ELEVATIONS	THEORETICAL GRADE ELEVATIONS ADJUSTED FOR DEAD LOAD DEFLECTIONS
Bk. of R1 Abut.	197+33.33	11.00	622.86	622.86
℄ Joint R1 Abut.	197+35.58	11.00	622.90	622.90
℄ E. Brg. R1 Abut.	197+36.33	11.00	622.91	622.91
U	197+46.33	11.00	623.11	623.14
V	197+56.33	11.00	623.31	623.36
W	197+66.33	11.00	623.50	623.58
X	197+76.33	11.00	623.70	623.79
Y	197+86.33	11.00	623.90	623.99
Z	197+96.33	11.00	624.09	624.18
A1	198+06.33	11.00	624.29	624.36
B1	198+16.33	11.00	624.48	624.54
C1	198+26.33	11.00	624.68	624.72
℄ R1 Pier	198+39.33	11.00	624.94	624.95
D1	198+49.33	11.00	625.14	625.15
E1	198+59.33	11.00	625.34	625.35
F1	198+69.33	11.00	625.54	625.56
G1	198+79.33	11.00	625.74	625.76
H1	198+89.33	11.00	625.94	625.97
I1	198+99.33	11.00	626.14	626.16
J1	199+09.33	11.00	626.34	626.36
℄ G22	199+18.79	11.00	626.53	626.55

GIRDER G1.7

LOCATION	STATION	OFFSET	THEORETICAL GRADE ELEVATIONS	THEORETICAL GRADE ELEVATIONS ADJUSTED FOR DEAD LOAD DEFLECTIONS
Bk. of R1 Abut.	197+33.33	17.50	622.76	622.76
℄ Joint R1 Abut.	197+35.58	17.50	622.80	622.80
℄ E. Brg. R1 Abut.	197+36.33	17.50	622.81	622.81
U	197+46.33	17.50	623.01	623.04
V	197+56.33	17.50	623.21	623.26
W	197+66.33	17.50	623.40	623.48
X	197+76.33	17.50	623.60	623.69
Y	197+86.33	17.50	623.80	623.88
Z	197+96.33	17.50	623.99	624.08
A1	198+06.33	17.50	624.19	624.26
B1	198+16.33	17.50	624.39	624.44
C1	198+26.33	17.50	624.58	624.61
℄ R1 Pier	198+39.33	17.50	624.84	624.85
D1	198+49.33	17.50	625.04	625.05
E1	198+59.33	17.50	625.24	625.25
F1	198+69.33	17.50	625.44	625.46
G1	198+79.33	17.50	625.64	625.67
H1	198+89.33	17.50	625.85	625.87
I1	198+99.33	17.50	626.05	626.07
J1	199+09.33	17.50	626.25	626.27
℄ G22	199+16.21	17.50	626.39	626.41

GIRDER G1.8

LOCATION	STATION	OFFSET	THEORETICAL GRADE ELEVATIONS	THEORETICAL GRADE ELEVATIONS ADJUSTED FOR DEAD LOAD DEFLECTIONS
Bk. of R1 Abut.	197+33.33	24.00	622.66	622.66
℄ Joint R1 Abut.	197+35.58	24.00	622.70	622.70
℄ E. Brg. R1 Abut.	197+36.33	24.00	622.72	622.72
U	197+46.33	24.00	622.91	622.96
V	197+56.33	24.00	623.11	623.19
W	197+66.33	24.00	623.31	623.41
X	197+76.33	24.00	623.50	623.62
Y	197+86.33	24.00	623.70	623.82
Z	197+96.33	24.00	623.90	624.00
A1	198+06.33	24.00	624.09	624.17
B1	198+16.33	24.00	624.29	624.34
C1	198+26.33	24.00	624.49	624.51
℄ R1 Pier	198+39.33	24.00	624.74	624.74
D1	198+49.33	24.00	624.94	624.95
E1	198+59.33	24.00	625.15	625.16
F1	198+69.33	24.00	625.35	625.37
G1	198+79.33	24.00	625.55	625.58
H1	198+89.33	24.00	625.75	625.78
I1	198+99.33	24.00	625.96	625.98
J1	199+09.33	24.00	626.16	626.18
℄ G22	199+13.63	24.00	626.25	626.27

GIRDER G1.9

LOCATION	STATION	OFFSET	THEORETICAL GRADE ELEVATIONS	THEORETICAL GRADE ELEVATIONS ADJUSTED FOR DEAD LOAD DEFLECTIONS
℄ G1.8	199+02.24	24.00	626.02	626.04
J1	199+09.33	28.31	626.10	626.30
℄ G22	199+11.42	29.57	626.11	626.12

GIRDER G1.10

LOCATION	STATION	OFFSET	THEORETICAL GRADE ELEVATIONS	THEORETICAL GRADE ELEVATIONS ADJUSTED FOR DEAD LOAD DEFLECTIONS
℄ G1.8	198+90.77	24.00	625.78	625.81
I1	198+99.33	29.17	625.88	625.90
℄ G22	199+09.21	35.15	625.99	626.01

GIRDER G1.10A

LOCATION	STATION	OFFSET	THEORETICAL GRADE ELEVATIONS	THEORETICAL GRADE ELEVATIONS ADJUSTED FOR DEAD LOAD DEFLECTIONS
℄ G1.8	198+79.33	24.000	625.55	625.58
G1	198+79.33	24.000	625.55	625.58
H1	198+89.33	30.040	625.67	625.69
I1	198+99.33	36.090	625.78	625.79
℄ G22	199+06.99	40.720	625.99	626.00

TOP OF SLAB ELEV. - 1
RAMP 1 FLARE
STRUCTURE NO. 016-0724

T·Y·LIN INTERNATIONAL

DESIGNED -	JPM, EKH
CHECKED -	AMD,
DRAWN -	JPM, EKH
CHECKED -	AMD,
DATE -	08/02/10

REVISIONS	
NAME	DATE

SHEET NO. 21
137 SHEETS

F.A.I RTE.	SECTION	COUNTY	TOTAL SHEETS	SHEET NO.
55	0711.2R & 1011.1BR	COOK	200	51
		CONTRACT NO. 60L39		
FED. ROAD DIST. NO. 1	ILLINOIS	FED. AID PROJECT		

p:\01345\beam and bearing fabrication\55fltsedatal.dgn 2:22:55 PM 8/2/2010

STATE OF ILLINOIS
DEPARTMENT OF TRANSPORTATION

GIRDER G1.11

LOCATION	STATION	OFFSET	THEORETICAL GRADE ELEVATIONS	THEORETICAL GRADE ELEVATIONS ADJUSTED FOR DEAD LOAD DEFLECTIONS
℄ G1.8	198+67.89	24.00	625.32	625.34
F1	198+69.33	24.87	625.34	625.36
G1	198+79.33	30.91	625.45	625.47
H1	198+89.33	36.96	625.56	625.58
I1	198+99.33	43.01	625.68	625.68
℄ G22	199+04.78	46.30	625.73	625.73

P.G.L. RAMP 1 FLARE

LOCATION	STATION	OFFSET	THEORETICAL GRADE ELEVATIONS	THEORETICAL GRADE ELEVATIONS ADJUSTED FOR DEAD LOAD DEFLECTIONS
Bk. of R1 Abut.	197+33.33	0.00	623.02	623.02
℄ Joint R1 Abut.	197+35.58	0.00	623.06	623.06
℄ E. Brg. R1 Abut.	197+36.33	0.00	623.08	623.08
U	197+46.33	0.00	623.27	623.31
V	197+56.33	0.00	623.47	623.53
W	197+66.33	0.00	623.67	623.75
X	197+76.33	0.00	623.86	623.96
Y	197+86.33	0.00	624.06	624.16
Z	197+96.33	0.00	624.26	624.35
A1	198+06.33	0.00	624.45	624.53
B1	198+16.33	0.00	624.65	624.71
C1	198+26.33	0.00	624.85	624.88
℄ R1 Pier	198+39.33	0.00	625.10	625.12
D1	198+49.33	0.00	625.30	625.31
E1	198+59.33	0.00	625.49	625.51
F1	198+69.33	0.00	625.69	625.71
G1	198+79.33	0.00	625.89	625.91
H1	198+89.33	0.00	626.08	626.11
I1	198+99.33	0.00	626.28	626.31
J1	199+09.33	0.00	626.48	626.50
K1	199+19.33	0.00	626.67	626.69
℄ G22	199+23.16	0.00	626.75	626.76

GIRDER G1.20

LOCATION	STATION	OFFSET	THEORETICAL GRADE ELEVATIONS	THEORETICAL GRADE ELEVATIONS ADJUSTED FOR DEAD LOAD DEFLECTIONS
℄ FB-1.9	198+24.39	-28.00	625.23	625.23
C1	198+26.33	-28.00	625.27	625.27
℄ R1 Pier	198+39.33	-28.00	625.52	625.52
D1	198+49.33	-28.00	625.70	625.72
E1	198+59.33	-28.00	625.89	625.92
F1	198+69.33	-28.00	626.07	626.11
G1	198+79.33	-28.00	626.26	626.31
H1	198+89.33	-28.00	626.44	626.49
I1	198+99.33	-28.00	626.62	626.67
J1	199+09.33	-28.00	626.81	626.85
K1	199+19.33	-28.00	626.99	627.02
L1	199+29.33	-28.00	627.18	627.19
℄ G22	199+34.28	-28.00	627.27	627.27

GIRDER G1.12

LOCATION	STATION	OFFSET	THEORETICAL GRADE ELEVATIONS	THEORETICAL GRADE ELEVATIONS ADJUSTED FOR DEAD LOAD DEFLECTIONS
Bk. of R1 Abut.	197+33.33	-21.50	623.34	623.34
℄ Joint R1 Abut.	197+35.58	-21.50	623.38	623.38
℄ E. Brg. R1 Abut.	197+36.33	-21.50	623.40	623.40
U	197+46.33	-21.84	623.60	623.61
V	197+56.33	-22.47	623.81	623.82
W	197+66.33	-23.34	624.02	624.03
X	197+76.33	-24.44	624.23	624.24
Y	197+86.33	-25.77	624.45	624.46
Z	197+96.33	-27.35	624.67	624.67
A1	198+06.33	-29.16	624.89	624.89
B1	198+16.33	-31.22	625.12	625.12
C1	198+26.33	-33.52	625.35	625.35
℄ R1 Pier	198+39.33	-36.89	625.65	625.66
D1	198+49.33	-39.77	625.87	625.90
E1	198+59.33	-42.92	626.10	626.15
F1	198+69.33	-46.34	626.32	626.39
G1	198+79.33	-50.03	626.53	626.62
H1	198+89.33	-54.01	626.75	626.85
I1	198+99.33	-58.27	626.96	627.07
J1	199+09.33	-62.84	627.18	627.29
K1	199+19.33	-67.71	627.39	627.49
L1	199+29.33	-72.91	627.60	627.68
M1	199+39.33	-78.45	627.79	627.86
N1	199+49.33	-84.34	627.98	628.01
℄ G22	199+59.06	-90.42	628.15	628.16

GIRDER G1.17

LOCATION	STATION	OFFSET	THEORETICAL GRADE ELEVATIONS	THEORETICAL GRADE ELEVATIONS ADJUSTED FOR DEAD LOAD DEFLECTIONS
℄ FB-1.6	198+81.39	-47.50	626.54	626.64
H1	198+89.33	-47.50	626.67	626.78
I1	198+99.33	-47.50	626.84	626.96
J1	199+09.33	-47.50	627.02	627.13
K1	199+19.33	-47.50	627.19	627.28
L1	199+29.33	-47.50	627.36	627.43
M1	199+39.33	-47.50	627.53	627.57
℄ G22	199+42.02	-47.50	627.58	627.60

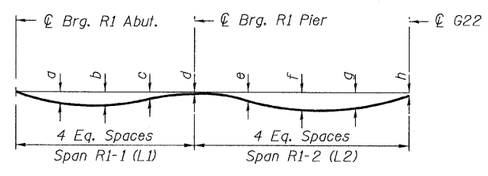

DEAD LOAD DEFLECTION DIAGRAM

(Includes weight of concrete only.)

Note:
The above deflections are not to be used in the field if the engineer is working from the grade elevations adjusted for dead load deflections as shown above.

GIRDER G1.13

LOCATION	STATION	OFFSET	THEORETICAL GRADE ELEVATIONS	THEORETICAL GRADE ELEVATIONS ADJUSTED FOR DEAD LOAD DEFLECTIONS
℄ FB-1.2	199+38.38	-73.50	627.75	627.81
M1	199+39.33	-73.50	627.76	627.82
N1	199+49.33	-73.50	627.91	627.94
℄ G22	199+52.34	-73.50	627.95	627.97

GIRDER G1.14

LOCATION	STATION	OFFSET	THEORETICAL GRADE ELEVATIONS	THEORETICAL GRADE ELEVATIONS ADJUSTED FOR DEAD LOAD DEFLECTIONS
℄ FB-1.3	199+26.38	-67.00	627.49	627.58
L1	199+29.33	-67.00	627.54	627.62
M1	199+39.33	-67.00	627.70	627.76
N1	199+49.33	-67.00	627.86	627.89
℄ G22	199+49.76	-67.00	627.87	627.89

GIRDER G1.18

LOCATION	STATION	OFFSET	THEORETICAL GRADE ELEVATIONS	THEORETICAL GRADE ELEVATIONS ADJUSTED FOR DEAD LOAD DEFLECTIONS
℄ FB-1.7	198+66.39	-41.00	626.20	626.27
F1	198+69.33	-41.00	626.25	626.32
G1	198+79.33	-41.00	626.42	626.52
H1	198+89.33	-41.00	626.60	626.72
I1	198+99.33	-41.00	626.77	626.90
J1	199+09.33	-41.00	626.95	627.06
K1	199+19.33	-41.00	627.12	627.21
L1	199+29.33	-41.00	627.30	627.36
M1	199+39.33	-41.00	627.48	627.51
℄ G22	199+39.44	-41.00	627.48	627.50

GIRDER G1.15

LOCATION	STATION	OFFSET	THEORETICAL GRADE ELEVATIONS	THEORETICAL GRADE ELEVATIONS ADJUSTED FOR DEAD LOAD DEFLECTIONS
℄ FB-1.4	199+11.38	-60.50	627.19	627.30
K1	199+19.33	-60.50	627.32	627.42
L1	199+29.33	-60.50	627.48	627.56
M1	199+39.33	-60.50	627.65	627.70
℄ G22	199+47.18	-60.50	627.78	627.80

GIRDER G1.16

LOCATION	STATION	OFFSET	THEORETICAL GRADE ELEVATIONS	THEORETICAL GRADE ELEVATIONS ADJUSTED FOR DEAD LOAD DEFLECTIONS
℄ FB-1.5	198+96.38	-54.00	626.87	626.98
I1	198+99.33	-54.00	626.92	627.03
J1	199+09.33	-54.00	627.09	627.19
K1	199+19.33	-54.00	627.25	627.35
L1	199+29.33	-54.00	627.42	627.49
M1	199+39.33	-54.00	627.59	627.63
℄ G22	199+44.60	-54.00	627.68	627.70

GIRDER G1.19

LOCATION	STATION	OFFSET	THEORETICAL GRADE ELEVATIONS	THEORETICAL GRADE ELEVATIONS ADJUSTED FOR DEAD LOAD DEFLECTIONS
℄ FB-1.8	198+51.39	-34.50	625.84	625.87
E1	198+59.33	-34.50	625.98	626.02
F1	198+69.33	-34.50	626.16	626.22
G1	198+79.33	-34.50	626.34	626.42
H1	198+89.33	-34.50	626.52	626.60
I1	198+99.33	-34.50	626.70	626.78
J1	199+09.33	-34.50	626.88	626.95
K1	199+19.33	-34.50	627.06	627.11
L1	199+29.33	-34.50	627.24	627.27
℄ G22	199+36.86	-34.50	627.38	627.39

Girder	a	b	c	d	e	f	g	h	L1	L2
G1.1*	-	1/2"	1/2"	0	1/4"	1/2"	3/8"	0	60'-0"	92'-3 3/4"
G1.2	7/8"	1 1/8"	1/2"	0	1/8"	1/4"	1/4"	0	103'-0"	89'-8 3/4"
G1.3	7/8"	1 1/8"	1/2"	1/8"	1/4"	1/4"	1/4"	1/8"	103'-0"	87'-1 3/4"
G1.4	7/8"	1 1/8"	5/8"	1/2"	1/4"	3/8"	3/8"	1/8"	103'-0"	84'-6 7/8"
G1.5	7/8"	1 1/8"	5/8"	1/4"	1/4"	3/8"	3/8"	1/8"	103'-0"	81'-11 1/8"
G1.6	7/8"	1 1/8"	1/2"	1/8"	1/4"	3/8"	3/8"	1/4"	103'-0"	79'-4 7/8"
G1.7	7/8"	1 1/8"	1/2"	1/8"	1/8"	1/4"	3/8"	1/4"	103'-0"	76'-9 7/8"
G1.8	1 1/4"	1 3/8"	1/2"	0	1/8"	1/4"	3/8"	1/4"	103'-0"	74'-3"
G1.9	-	-	-	1/4"	-	1/4"	-	1/8"	-	10'-9 3/8"
G1.10	-	-	-	3/8"	-	1/4"	-	1/8"	-	21'-6 7/8"
G1.10A	-	-	-	3/8"	-	1/4"	-	1/8"	-	32'-4"
G1.11	-	-	-	1/4"	1/4"	1/4"	1/8"	0	-	43'-1 1/4"
G1.12	1/8"	1/8"	0	1/8"	1/8"	1 3/8"	1"	1/8"	104'-4 13/16"	*131'-7 1/16"
G1.13	-	-	-	3/4"	-	1/2"	-	1/4"	-	13'-11 1/2"
G1.14	-	-	-	1"	-	3/4"	-	1/4"	-	23'-4 1/2"
G1.15	-	-	-	1 1/4"	1 1/8"	1"	5/8"	1/4"	-	35'-9 1/2"
G1.16	-	-	-	1 3/8"	1 1/4"	1 1/8"	3/4"	1/4"	-	48'-2 5/8"
G1.17	-	-	-	1 1/4"	1 3/8"	1 3/8"	7/8"	1/4"	-	60'-7 5/8"
G1.18	-	-	-	3/4"	1 3/8"	1 1/2"	1"	1/4"	-	73'-0 5/8"
G1.19	-	-	-	3/8"	7/8"	1"	3/4"	1/8"	-	85'-5 5/8"
G1.20	-	-	-	0	3/8"	5/8"	1/2"	0	-	94'-10 3/4"

* For G1.1 only, b is end of girder and c is midspan

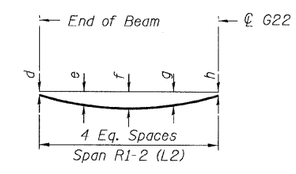

DEAD LOAD DEFLECTION DIAGRAM

(Includes weight of concrete only.)

TOP OF SLAB ELEV. - 2
RAMP 1 FLARE
STRUCTURE NO. 016-0724

T·Y·LIN INTERNATIONAL

DESIGNED	-	JPM, EKH
CHECKED	-	AMD,
DRAWN	-	JPM, EKH
CHECKED	-	AMD,
DATE	-	08/02/10

REVISIONS	
NAME	DATE

SHEET NO. 22
137 SHEETS

F.A.I RTE.	SECTION	COUNTY	TOTAL SHEETS	SHEET NO.
55	0711.2R & 1011.1BR	COOK	200	52
		CONTRACT NO. 60L39		
FED. ROAD DIST. NO. 1	ILLINOIS	FED. AID PROJECT		

2:22:56 PM
p:\01345\beam and bearing fabrication\55fltsedata2.dgn
8/2/2010

STATE OF ILLINOIS
DEPARTMENT OF TRANSPORTATION

GIRDER G2.1

LOCATION	STATION	OFFSET	THEORETICAL GRADE ELEVATIONS	THEORETICAL GRADE ELEVATIONS ADJUSTED FOR DEAD LOAD DEFLECTIONS
℄ FB2.2	397+92.38	21.50	625.75	625.79
X	398+01.38	21.50	626.02	626.05
Y	398+11.38	21.50	626.32	626.34
Z	398+21.38	21.50	626.62	626.63
A1	398+31.38	21.50	626.92	626.93
℄ R2 Pier	398+38.83	21.50	627.13	627.13
B1	398+48.83	21.50	627.36	627.37
C1	398+58.83	21.50	627.58	627.60
D1	398+68.83	21.50	627.80	627.82
E1	398+78.83	21.50	628.03	628.06
F1	398+88.83	21.50	628.25	628.27
G1	398+98.83	21.50	628.48	628.50
H1	399+08.83	21.50	628.70	628.71
℄ G22	399+14.62	21.50	628.84	628.84

GIRDER G2.2

LOCATION	STATION	OFFSET	THEORETICAL GRADE ELEVATIONS	THEORETICAL GRADE ELEVATIONS ADJUSTED FOR DEAD LOAD DEFLECTIONS
Back of R2 Abut.	397+64.38	15.00	624.82	624.82
℄ Joint R2 Abut.	397+62.13	15.00	624.75	624.75
℄ E. Brg. R2 Abut.	397+61.38	15.00	624.73	624.73
U	397+71.38	15.00	625.03	625.05
V	397+81.38	15.00	625.33	625.37
W	397+91.38	15.00	625.63	625.69
X	398+01.38	15.00	625.93	625.98
Y	398+11.38	15.00	626.23	626.27
Z	398+21.38	15.00	626.53	626.56
A1	398+31.38	15.00	626.83	626.84
℄ R2 Pier	398+38.83	15.00	627.04	627.04
B1	398+48.83	15.00	627.27	627.27
C1	398+58.83	15.00	627.50	627.51
D1	398+68.83	15.00	627.73	627.76
E1	398+78.83	15.00	627.97	627.99
F1	398+88.83	15.00	628.20	628.23
G1	398+98.83	15.00	628.43	628.46
H1	399+08.83	15.00	628.66	628.68
℄ G22	399+17.21	15.00	628.87	628.88

GIRDER G2.3

LOCATION	STATION	OFFSET	THEORETICAL GRADE ELEVATIONS	THEORETICAL GRADE ELEVATIONS ADJUSTED FOR DEAD LOAD DEFLECTIONS
Back of R2 Abut.	397+64.38	8.50	624.72	624.72
℄ Joint R2 Abut.	397+62.13	8.50	624.65	624.65
℄ E. Brg. R2 Abut.	397+61.38	8.50	624.63	624.63
U	397+71.38	8.50	624.93	624.95
V	397+81.38	8.50	625.23	625.26
W	397+91.38	8.50	625.53	625.57
X	398+01.38	8.50	625.83	625.87
Y	398+11.38	8.50	626.13	626.16
Z	398+21.38	8.50	626.43	626.45
A1	398+31.38	8.50	626.73	626.74
℄ R2 Pier	398+38.83	8.50	626.94	626.94
B1	398+48.83	8.50	627.18	627.19
C1	398+58.83	8.50	627.42	627.44
D1	398+68.83	8.50	627.66	627.70
E1	398+78.83	8.50	627.90	627.94
F1	398+88.83	8.50	628.14	628.18
G1	398+98.83	8.50	628.38	628.42
H1	399+08.83	8.50	628.62	628.64
I1	399+18.83	8.50	628.86	628.87
℄ G22	399+19.79	8.50	628.89	628.90

GIRDER G2.4

LOCATION	STATION	OFFSET	THEORETICAL GRADE ELEVATIONS	THEORETICAL GRADE ELEVATIONS ADJUSTED FOR DEAD LOAD DEFLECTIONS
Back of R2 Abut.	397+64.38	2.00	624.62	624.62
℄ Joint R2 Abut.	397+62.13	2.00	624.55	624.55
℄ E. Brg. R2 Abut.	397+61.38	2.00	624.53	624.53
U	397+71.38	2.00	624.83	624.85
V	397+81.38	2.00	625.13	625.16
W	397+91.38	2.00	625.43	625.47
X	398+01.38	2.00	625.73	625.77
Y	398+11.38	2.00	626.03	626.06
Z	398+21.38	2.00	626.33	626.35
A1	398+31.38	2.00	626.63	626.64
℄ R2 Pier	398+38.83	2.00	626.84	626.85
B1	398+48.83	2.00	627.09	627.11
C1	398+58.83	2.00	627.33	627.37
D1	398+68.83	2.00	627.58	627.64
E1	398+78.83	2.00	627.83	627.89
F1	398+88.83	2.00	628.08	628.14
G1	398+98.83	2.00	628.32	628.39
H1	399+08.83	2.00	628.57	628.62
I1	399+18.83	2.00	628.82	628.85
℄ G22	399+22.37	2.00	628.92	628.94

GIRDER G2.5

LOCATION	STATION	OFFSET	THEORETICAL GRADE ELEVATIONS	THEORETICAL GRADE ELEVATIONS ADJUSTED FOR DEAD LOAD DEFLECTIONS
Back of R2 Abut.	397+64.38	-4.50	624.52	624.52
℄ Joint R2 Abut.	397+62.13	-4.50	624.45	624.45
℄ E. Brg. R2 Abut.	397+61.38	-4.50	624.43	624.43
U	397+71.38	-4.50	624.73	624.75
V	397+81.38	-4.50	625.03	625.06
W	397+91.38	-4.50	625.33	625.37
X	398+01.38	-4.50	625.63	625.67
Y	398+11.38	-4.50	625.93	625.96
Z	398+21.38	-4.50	626.23	626.25
A1	398+31.38	-4.50	626.53	626.54
℄ R2 Pier	398+38.83	-4.50	626.74	626.75
B1	398+48.83	-4.50	627.00	627.02
C1	398+58.83	-4.50	627.25	627.29
D1	398+68.83	-4.50	627.50	627.57
E1	398+78.83	-4.50	627.76	627.84
F1	398+88.83	-4.50	628.01	628.09
G1	398+98.83	-4.50	628.26	628.34
H1	399+08.83	-4.50	628.52	628.58
I1	399+18.83	-4.50	628.77	628.81
℄ G22	399+24.95	-4.50	628.94	628.96

GIRDER G2.6

LOCATION	STATION	OFFSET	THEORETICAL GRADE ELEVATIONS	THEORETICAL GRADE ELEVATIONS ADJUSTED FOR DEAD LOAD DEFLECTIONS
Back of R2 Abut.	397+64.38	-11.00	624.43	624.43
℄ Joint R2 Abut.	397+62.13	-11.00	624.36	624.36
℄ E. Brg. R2 Abut.	397+61.38	-11.00	624.34	624.34
U	397+71.38	-11.00	624.64	624.65
V	397+81.38	-11.00	624.94	624.96
W	397+91.38	-11.00	625.24	625.27
X	398+01.38	-11.00	625.54	625.57
Y	398+11.38	-11.00	625.84	625.86
Z	398+21.38	-11.00	626.14	626.15
A1	398+31.38	-11.00	626.44	626.44
℄ R2 Pier	398+38.83	-11.00	626.65	626.65
B1	398+48.83	-11.00	626.91	626.93
C1	398+58.83	-11.00	627.17	627.21
D1	398+68.83	-11.00	627.43	627.50
E1	398+78.83	-11.00	627.69	627.78
F1	398+88.83	-11.00	627.95	628.04
G1	398+98.83	-11.00	628.21	628.30
H1	399+08.83	-11.00	628.47	628.55
I1	399+18.83	-11.00	628.73	628.78
℄ G22	399+27.53	-11.00	628.97	629.00

GIRDER G2.7

LOCATION	STATION	OFFSET	THEORETICAL GRADE ELEVATIONS	THEORETICAL GRADE ELEVATIONS ADJUSTED FOR DEAD LOAD DEFLECTIONS
Back of R2 Abut.	397+64.38	-17.50	624.33	624.33
℄ Joint R2 Abut.	397+62.13	-17.50	624.26	624.26
℄ E. Brg. R2 Abut.	397+61.38	-17.50	624.24	624.24
U	397+71.38	-17.50	624.54	624.55
V	397+81.38	-17.50	624.84	624.86
W	397+91.38	-17.50	625.14	625.17
X	398+01.38	-17.50	625.44	625.47
Y	398+11.38	-17.50	625.74	625.76
Z	398+21.38	-17.50	626.04	626.05
A1	398+31.38	-17.50	626.34	626.34
℄ R2 Pier	398+38.83	-17.50	626.55	626.55
B1	398+48.83	-17.50	626.81	626.84
C1	398+58.83	-17.50	627.08	627.13
D1	398+68.83	-17.50	627.35	627.43
E1	398+78.83	-17.50	627.62	627.71
F1	398+88.83	-17.50	627.88	627.99
G1	398+98.83	-17.50	628.15	628.26
H1	399+08.83	-17.50	628.42	628.51
I1	399+18.83	-17.50	628.68	628.75
J1	399+28.83	-17.50	628.95	628.98
℄ G22	399+30.11	-17.50	629.00	629.03

GIRDER G2.8

LOCATION	STATION	OFFSET	THEORETICAL GRADE ELEVATIONS	THEORETICAL GRADE ELEVATIONS ADJUSTED FOR DEAD LOAD DEFLECTIONS
Back of R2 Abut.	397+64.38	-24.00	624.23	624.23
℄ Joint R2 Abut.	397+62.13	-24.00	624.16	624.16
℄ E. Brg. R2 Abut.	397+61.38	-24.00	624.14	624.14
U	397+71.38	-24.00	624.44	624.46
V	397+81.38	-24.00	624.74	624.77
W	397+91.38	-24.00	625.04	625.07
X	398+01.38	-24.00	625.34	625.37
Y	398+11.38	-24.00	625.64	625.66
Z	398+21.38	-24.00	625.94	625.95
A1	398+31.38	-24.00	626.24	626.24
℄ R2 Pier	398+38.83	-24.00	626.45	626.45
B1	398+48.83	-24.00	626.72	626.75
C1	398+58.83	-24.00	626.99	627.04
D1	398+68.83	-24.00	627.27	627.35
E1	398+78.83	-24.00	627.54	627.64
F1	398+88.83	-24.00	627.81	627.92
G1	398+98.83	-24.00	628.08	628.20
H1	399+08.83	-24.00	628.35	628.45
I1	399+18.83	-24.00	628.63	628.70
J1	399+28.83	-24.00	628.90	628.94
℄ G22	399+32.69	-24.00	629.02	629.05

GIRDER G2.9

LOCATION	STATION	OFFSET	THEORETICAL GRADE ELEVATIONS	THEORETICAL GRADE ELEVATIONS ADJUSTED FOR DEAD LOAD DEFLECTIONS
℄ R2 Pier	398+38.83	-30.50	626.35	626.35
B1	398+48.83	-30.50	626.63	626.66
C1	398+58.83	-30.50	626.91	626.97
D1	398+68.83	-30.50	627.19	627.27
E1	398+78.83	-30.50	627.46	627.56
F1	398+88.83	-30.50	627.74	627.84
G1	398+98.83	-30.50	628.02	628.12
H1	399+08.83	-30.50	628.30	628.38
I1	399+18.83	-30.50	628.58	628.64
J1	399+28.83	-30.50	628.85	628.89
℄ G22	399+35.27	-30.50	629.05	629.07

GIRDER G2.10

LOCATION	STATION	OFFSET	THEORETICAL GRADE ELEVATIONS	THEORETICAL GRADE ELEVATIONS ADJUSTED FOR DEAD LOAD DEFLECTIONS
℄ G2.11	399+08.24	-37.00	628.22	628.29
H1	399+08.83	-37.00	628.24	628.31
I1	399+18.83	-37.00	628.52	628.57
J1	399+28.83	-37.00	628.80	628.83
℄ G22	399+37.85	-37.00	629.07	629.09

GIRDER G2.10A

LOCATION	STATION	OFFSET	THEORETICAL GRADE ELEVATIONS	THEORETICAL GRADE ELEVATIONS ADJUSTED FOR DEAD LOAD DEFLECTIONS
℄ G2.11	399+21.17	-43.50	628.53	628.56
J1	399+28.83	-43.50	628.75	628.77
K1	399+38.83	-43.50	629.03	629.04
℄ G22	399+40.43	-43.50	629.10	629.11

TOP OF SLAB ELEV. - 1
RAMP 2 FLARE
STRUCTURE NO. 016-0724

T·Y·LIN INTERNATIONAL

DESIGNED -	JPM, EKH
CHECKED -	AMD,
DRAWN -	JPM, EKH
CHECKED -	AMD,
DATE -	08/02/10

REVISIONS	
NAME	DATE

SHEET NO. 23
137 SHEETS

F.A.I RTE.	SECTION	COUNTY	TOTAL SHEETS	SHEET NO.
55	0711.2R & 1011.1BR	COOK	200	53
		CONTRACT NO. 60L39		
FED. ROAD DIST. NO. 1	ILLINOIS	FED. AID PROJECT		

2:22:57 PM
p:\01345\beam and bearing fabrication\55f2tsedata1.dgn
8/2/2010

STATE OF ILLINOIS
DEPARTMENT OF TRANSPORTATION

GIRDER G2.11

LOCATION	STATION	OFFSET	THEORETICAL GRADE ELEVATIONS	THEORETICAL GRADE ELEVATIONS ADJUSTED FOR DEAD LOAD DEFLECTIONS
℄ G2.9	398+95.41	-30.50	627.99	628.09
G1	398+98.83	-32.27	628.00	628.10
H1	399+08.83	-37.29	628.24	628.30
I1	399+18.83	-42.32	628.47	628.51
J1	399+28.83	-47.35	628.72	628.72
℄ S. Brg. C. Abut. 4	399+29.62	-47.75	628.75	628.75

P.G.L. RAMP 2 FLARE

LOCATION	STATION	OFFSET	THEORETICAL GRADE ELEVATIONS	THEORETICAL GRADE ELEVATIONS ADJUSTED FOR DEAD LOAD DEFLECTIONS
Back of R2 Abut.	397+58.38	0.00	624.41	624.41
℄ Joint R2 Abut.	397+60.63	0.00	624.48	624.48
℄ E. Brg. R2 Abut.	397+61.38	0.00	624.50	624.50
U	397+71.38	0.00	624.80	624.82
V	397+81.38	0.00	625.10	625.13
W	397+91.38	0.00	625.40	625.44
X	398+01.38	0.00	625.70	625.74
Y	398+11.38	0.00	626.00	626.03
Z	398+21.38	0.00	626.30	626.32
A1	398+31.38	0.00	626.60	626.61
℄ R2 Pier	398+38.83	0.00	626.81	626.82
B1	398+48.83	0.00	627.06	627.08
C1	398+58.83	0.00	627.31	627.35
D1	398+68.83	0.00	627.56	627.61
E1	398+78.83	0.00	627.81	627.87
F1	398+88.83	0.00	628.06	628.13
G1	398+98.83	0.00	628.31	628.37
H1	399+08.83	0.00	628.56	628.61
I1	399+18.83	0.00	628.81	628.84
℄ G22	399+23.16	0.00	628.92	628.94

GIRDER G2.20

LOCATION	STATION	OFFSET	THEORETICAL GRADE ELEVATIONS	THEORETICAL GRADE ELEVATIONS ADJUSTED FOR DEAD LOAD DEFLECTIONS
℄FB2.4	398+18.38	28.00	626.63	626.64
Z	398+21.38	28.00	626.72	626.73
A1	398+31.38	28.00	627.02	627.03
℄ R2 Pier	398+38.83	28.00	627.23	627.23
B1	398+48.83	28.00	627.44	627.46
C1	398+58.83	28.00	627.66	627.68
D1	398+68.83	28.00	627.87	627.90
E1	398+78.83	28.00	628.09	628.12
F1	398+88.83	28.00	628.30	628.33
G1	398+98.83	28.00	628.52	628.54
H1	399+08.83	28.00	628.73	628.74
℄ G22	399+12.04	28.00	628.81	628.81

GIRDER G2.12

LOCATION	STATION	OFFSET	THEORETICAL GRADE ELEVATIONS	THEORETICAL GRADE ELEVATIONS ADJUSTED FOR DEAD LOAD DEFLECTIONS
Back of R2 Abut.	397+64.38	21.50	624.91	624.91
℄ Joint R2 Abut.	397+62.13	21.50	624.84	624.84
℄ E. Brg. R2 Abut.	397+61.38	21.50	624.82	624.82
U	397+71.38	21.76	625.13	625.14
V	397+81.38	22.64	625.44	625.46
W	397+91.38	24.10	625.76	625.78
X	398+01.38	26.16	626.09	626.11
Y	398+11.38	28.85	626.43	626.45
Z	398+21.38	32.18	626.78	626.80
A1	398+31.38	36.21	627.14	627.16
℄ R2 Pier	398+38.83	39.69	627.41	627.42
B1	398+48.83	45.06	627.68	627.70
C1	398+58.83	51.32	627.94	627.97
D1	398+68.83	58.58	628.19	628.21
E1	398+78.83	67.02	628.38	628.40
F1	398+88.83	76.88	628.51	628.52
℄ G22	398+91.49	79.78	628.49	628.50

GIRDER G2.17

LOCATION	STATION	OFFSET	THEORETICAL GRADE ELEVATIONS	THEORETICAL GRADE ELEVATIONS ADJUSTED FOR DEAD LOAD DEFLECTIONS
℄ FB - 2.6	398+57.41	47.50	627.87	627.90
C1	398+58.83	47.50	627.90	627.93
D1	398+68.83	47.50	628.08	628.11
E1	398+78.83	47.50	628.26	628.30
F1	398+88.83	47.50	628.44	628.47
G1	398+98.83	47.50	628.62	628.64
℄ G22	399+04.30	47.50	628.72	628.73

GIRDER G2.13

LOCATION	STATION	OFFSET	THEORETICAL GRADE ELEVATIONS	THEORETICAL GRADE ELEVATIONS ADJUSTED FOR DEAD LOAD DEFLECTIONS
℄ G2.12	398+86.55	75.50	624.48	624.49
F1	398+88.83	73.50	628.51	628.52
℄ G22	398+93.98	73.50	628.55	628.56

GIRDER G2.14

LOCATION	STATION	OFFSET	THEORETICAL GRADE ELEVATIONS	THEORETICAL GRADE ELEVATIONS ADJUSTED FOR DEAD LOAD DEFLECTIONS
℄ G2.12	398+78.83	67.00	628.39	628.41
F1	398+88.83	67.00	628.51	628.53
℄ G22	398+96.56	67.00	628.60	628.61

GIRDER G2.18

LOCATION	STATION	OFFSET	THEORETICAL GRADE ELEVATIONS	THEORETICAL GRADE ELEVATIONS ADJUSTED FOR DEAD LOAD DEFLECTIONS
℄ FB - 2.5	398+46.83	41.00	627.58	627.60
B1	398+48.83	41.00	627.62	627.65
C1	398+58.83	41.00	627.82	627.86
D1	398+68.83	41.00	628.01	628.06
E1	398+78.83	41.00	628.21	628.25
F1	398+88.83	41.00	628.40	628.44
G1	398+98.83	41.00	628.60	628.62
℄ G22	399+06.88	41.00	628.76	628.77

GIRDER G2.15

LOCATION	STATION	OFFSET	THEORETICAL GRADE ELEVATIONS	THEORETICAL GRADE ELEVATIONS ADJUSTED FOR DEAD LOAD DEFLECTIONS
℄ G2.12	398+74.38	60.50	628.24	628.27
E1	398+78.83	60.50	628.34	628.37
F1	398+88.83	60.50	628.48	628.50
G1	398+98.83	60.50	628.62	628.63
℄ G22	398+99.14	60.50	628.65	628.66

GIRDER G2.16

LOCATION	STATION	OFFSET	THEORETICAL GRADE ELEVATIONS	THEORETICAL GRADE ELEVATIONS ADJUSTED FOR DEAD LOAD DEFLECTIONS
℄ G2.12	398+66.78	54.00	628.04	628.07
D1	398+68.83	54.00	628.14	628.17
E1	398+78.83	54.00	628.31	628.34
F1	398+88.83	54.00	628.47	628.50
G1	398+98.83	54.00	628.64	628.66
℄ G22	399+01.72	54.00	628.69	628.70

GIRDER G2.19

LOCATION	STATION	OFFSET	THEORETICAL GRADE ELEVATIONS	THEORETICAL GRADE ELEVATIONS ADJUSTED FOR DEAD LOAD DEFLECTIONS
℄ R2 Pier	398+38.83	34.50	627.33	627.34
B1	398+48.83	34.50	627.53	627.57
C1	398+58.83	34.50	627.74	627.79
D1	398+68.83	34.50	627.95	628.00
E1	398+78.83	34.50	628.15	628.21
F1	398+88.83	34.50	628.36	628.40
G1	398+98.83	34.50	628.56	628.59
H1	399+08.83	34.50	628.77	628.78
℄ G22	399+09.46	34.50	628.79	628.79

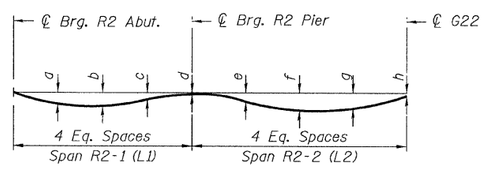

DEAD LOAD DEFLECTION DIAGRAM

(Includes weight of concrete only.)

Note:
The above deflections are not to be used in the field if the engineer is working from the grade elevations adjusted for dead load deflections as shown above.

Girder	a	b	c	d	e	f	g	h	L1	L2
G2.1*	-	3/8"	1/8"	0	1/4"	3/8"	1/4"	0		75'-9 7/8"
G2.2	5/8"	3/4"	3/8"	0	1/8"	3/8"	1/4"	1/8"	77'-5 3/8"	78'-4 3/4"
G2.3	1/2"	5/8"	1/4"	0	3/8"	5/8"	1/2"	1/8"	77'-5 3/8"	80'-11 3/4"
G2.4	3/8"	1/2"	1/4"	1/8"	1/2"	7/8"	3/4"	1/4"	77'-5 3/8"	83'-6 3/4"
G2.5	3/8"	1/2"	1/4"	1/8"	5/8"	1"	7/8"	1/4"	77'-5 3/8"	86'-1 3/4"
G2.6	3/8"	3/8"	1/8"	0	5/8"	1 1/4"	1 1/8"	3/8"	77'-5 3/8"	88'-8 5/8"
G2.7	3/8"	3/8"	1/8"	0	3/4"	1 3/8"	1 1/8"	3/8"	77'-5 3/8"	91'-3 5/8"
G2.8	3/8"	3/8"	1/8"	0	3/4"	1 3/8"	1 1/4"	3/8"	77'-5 3/8"	93'-10 5/8"
G2.9	-	-	-	0	7/8"	1 1/4"	1"	1/4"	-	96'-5 5/8"
G2.10	-	-	-	7/8"	-	1/2"	-	1/8"	-	29'-6 3/8"
G2.10A	-	-	-	3/8"	-	1/4"	-	1/8"	-	19'-2 1/4"
G2.11	-	-	-	1 1/4"	1"	5/8"	3/8"	0	-	38'-3 3/8"
G2.12	1/4"	1/4"	1/4"	1/8"	1/4"	3/8"	1/4"	1/8"	80'-3 1/4"	146'-10 1/4"
G2.13	-	-	-	1/8"	-	1/8"	-	1/8"	-	8'-5 3/4"
G2.14	-	-	-	1/4"	-	1/4"	-	1/8"	-	17'-10 1/8"
G2.15	-	-	-	3/8"	-	1/4"	-	1/8"	-	27'-11 7/8"
G2.16	-	-	-	3/8"	3/8"	3/8"	3/8"	1/8"	-	39'-1 1/2"
G2.17	-	-	-	3/8"	1/2"	1/2"	3/8"	1/8"	-	46'-11"
G2.18	-	-	-	1/4"	1/2"	5/8"	3/8"	1/8"	-	60'-1"
G2.19	-	-	-	1/8"	5/8"	3/4"	1/2"	0	-	70'-7 7/8"
G2.20	-	-	-	0	1/4"	3/8"	1/4"	0	-	73'-2 7/8"

* For G2.1 only, b is end of girder and c is midspan

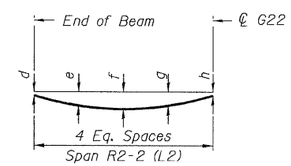

DEAD LOAD DEFLECTION DIAGRAM

(Includes weight of concrete only.)

TOP OF SLAB ELEV. - 2
RAMP 2 FLARE
STRUCTURE NO. 016-0724

TYLIN INTERNATIONAL

DESIGNED	JPM, EKH
CHECKED	AMD,
DRAWN	JPM, EKH
CHECKED	AMD,
DATE	08/02/10

REVISIONS	
NAME	DATE

SHEET NO. 24
137 SHEETS

F.A.I RTE.	SECTION	COUNTY	TOTAL SHEETS	SHEET NO.
55	0711.2R & 1011.1BR	COOK	200	54
		CONTRACT NO. 60L39		
FED. ROAD DIST. NO. 1	ILLINOIS	FED. AID PROJECT		

2:22:58 PM
p:\01345\beam and bearing fabrication\55f2tsedata2.dgn
8/2/2010

STATE OF ILLINOIS
DEPARTMENT OF TRANSPORTATION

GIRDER G3.1

LOCATION	STATION	OFFSET	THEORETICAL GRADE ELEVATIONS	THEORETICAL GRADE ELEVATIONS ADJUSTED FOR DEAD LOAD DEFLECTIONS
℄ G1	200+85.38	-21.50	627.95	627.95
C	200+86.84	-21.50	627.91	627.91
D	200+96.84	-21.50	627.68	627.69
E	201+06.84	-21.50	627.45	627.47
F	201+16.84	-21.50	627.22	627.24
G	201+26.84	-21.50	626.99	627.02
H	201+36.84	-21.50	626.77	626.79
I	201+46.84	-21.50	626.54	626.55
℄ R3 Pier	201+61.17	-21.50	626.21	626.21
J	201+71.17	-21.50	625.98	625.99
K	201+81.17	-21.50	625.73	625.74
L	201+91.17	-21.50	625.48	625.50
M	202+01.17	-21.50	625.21	625.24
℄ FB-3.2	202+07.62	-21.50	625.04	625.08

GIRDER G3.2

LOCATION	STATION	OFFSET	THEORETICAL GRADE ELEVATIONS	THEORETICAL GRADE ELEVATIONS ADJUSTED FOR DEAD LOAD DEFLECTIONS
℄ G1	200+82.79	-15.00	627.86	627.87
C	200+86.84	-15.00	627.76	627.77
D	200+96.84	-15.00	627.54	627.56
E	201+06.84	-15.00	627.32	627.35
F	201+16.84	-15.00	627.10	627.13
G	201+26.84	-15.00	626.88	626.91
H	201+36.84	-15.00	626.65	626.67
I	201+46.84	-15.00	626.43	626.44
℄ R3 Pier	201+61.17	-15.00	626.12	626.12
J	201+71.17	-15.00	625.89	625.90
K	201+81.17	-15.00	625.64	625.67
L	201+91.17	-15.00	625.39	625.44
M	202+01.17	-15.00	625.12	625.18
N	202+11.17	-15.00	624.85	624.90
O	202+21.17	-15.00	624.57	624.61
P	202+31.17	-15.00	624.28	624.30
℄ W. Brg. R3 Abut.	202+38.62	-15.00	624.06	624.06
℄ Joint R3 Abut.	202+39.37	-15.00	624.04	624.04
Back of R3 Abut.	202+41.62	-15.00	623.97	623.97

GIRDER G3.3

LOCATION	STATION	OFFSET	THEORETICAL GRADE ELEVATIONS	THEORETICAL GRADE ELEVATIONS ADJUSTED FOR DEAD LOAD DEFLECTIONS
℄ G1	200+80.21	-8.50	627.77	627.78
C	200+86.84	-8.50	627.62	627.64
D	200+96.84	-8.50	627.40	627.44
E	201+06.84	-8.50	627.19	627.24
F	201+16.84	-8.50	626.97	627.02
G	201+26.84	-8.50	626.76	626.81
H	201+36.84	-8.50	626.54	626.57
I	201+46.84	-8.50	626.33	626.35
℄ R3 Pier	201+61.17	-8.50	626.02	626.02
J	201+71.17	-8.50	625.79	625.80
K	201+81.17	-8.50	625.54	625.56
L	201+91.17	-8.50	625.29	625.33
M	202+01.17	-8.50	625.02	625.06
N	202+11.17	-8.50	624.75	624.79
O	202+21.17	-8.50	624.47	624.50
P	202+31.17	-8.50	624.18	624.19
℄ W. Brg. R3 Abut.	202+38.62	-8.50	623.96	623.96
℄ Joint R3 Abut.	202+39.37	-8.50	623.94	623.94
Back of R3 Abut.	202+41.62	-8.50	623.87	623.87

GIRDER G3.4

LOCATION	STATION	OFFSET	THEORETICAL GRADE ELEVATIONS	THEORETICAL GRADE ELEVATIONS ADJUSTED FOR DEAD LOAD DEFLECTIONS
℄ G1	200+77.63	-2.00	627.68	627.70
C	200+86.84	-2.00	627.48	627.52
D	200+96.84	-2.00	627.27	627.33
E	201+06.84	-2.00	627.06	627.13
F	201+16.84	-2.00	626.85	626.92
G	201+26.84	-2.00	626.64	626.70
H	201+36.84	-2.00	626.43	626.47
I	201+46.84	-2.00	626.22	626.25
℄ R3 Pier	201+61.17	-2.00	625.92	625.93
J	201+71.17	-2.00	625.69	625.70
K	201+81.17	-2.00	625.44	625.46
L	201+91.17	-2.00	625.19	625.23
M	202+01.17	-2.00	624.92	624.96
N	202+11.17	-2.00	624.65	624.69
O	202+21.17	-2.00	624.37	624.40
P	202+31.17	-2.00	624.08	624.09
℄ W. Brg. R3 Abut.	202+38.62	-2.00	623.86	623.86
℄ Joint R3 Abut.	202+39.37	-2.00	623.84	623.84
Back of R3 Abut.	202+41.62	-2.00	623.77	623.77

GIRDER G3.5

LOCATION	STATION	OFFSET	THEORETICAL GRADE ELEVATIONS	THEORETICAL GRADE ELEVATIONS ADJUSTED FOR DEAD LOAD DEFLECTIONS
℄ G1	200+75.05	4.50	627.58	627.60
B	200+76.84	4.50	627.54	627.57
C	200+86.84	4.50	627.33	627.39
D	200+96.84	4.50	627.13	627.20
E	201+06.84	4.50	626.93	627.02
F	201+16.84	4.50	626.72	626.80
G	201+26.84	4.50	626.52	626.59
H	201+36.84	4.50	626.32	626.37
I	201+46.84	4.50	626.11	626.14
℄ R3 Pier	201+61.17	4.50	625.82	625.83
J	201+71.17	4.50	625.59	625.60
K	201+81.17	4.50	625.34	625.36
L	201+91.17	4.50	625.09	625.12
M	202+01.17	4.50	624.82	624.86
N	202+11.17	4.50	624.55	624.59
O	202+21.17	4.50	624.27	624.30
P	202+31.17	4.50	623.98	624.00
℄ W. Brg. R3 Abut.	202+38.62	4.50	623.76	623.76
℄ Joint R3 Abut.	202+39.37	4.50	623.74	623.74
Back of R3 Abut.	202+41.62	4.50	623.67	623.67

GIRDER G3.6

LOCATION	STATION	OFFSET	THEORETICAL GRADE ELEVATIONS	THEORETICAL GRADE ELEVATIONS ADJUSTED FOR DEAD LOAD DEFLECTIONS
℄ G1	200+72.47	11.00	627.48	627.51
B	200+76.84	11.00	627.39	627.43
C	200+86.84	11.00	627.19	627.26
D	200+96.84	11.00	626.99	627.08
E	201+06.84	11.00	626.80	626.90
F	201+16.84	11.00	626.60	626.69
G	201+26.84	11.00	626.40	626.48
H	201+36.84	11.00	626.20	626.26
I	201+46.84	11.00	626.01	626.05
℄ R3 Pier	201+61.17	11.00	625.73	625.73
J	201+71.17	11.00	625.50	625.50
K	201+81.17	11.00	625.25	625.26
L	201+91.17	11.00	625.00	625.02
M	202+01.17	11.00	624.73	624.76
N	202+11.17	11.00	624.46	624.49
O	202+21.17	11.00	624.18	624.20
P	202+31.17	11.00	623.89	623.90
℄ W. Brg. R3 Abut.	202+38.62	11.00	623.67	623.67
℄ Joint R3 Abut.	202+39.37	11.00	623.65	623.65
Back of R3 Abut.	202+41.62	11.00	623.58	623.58

GIRDER G3.7

LOCATION	STATION	OFFSET	THEORETICAL GRADE ELEVATIONS	THEORETICAL GRADE ELEVATIONS ADJUSTED FOR DEAD LOAD DEFLECTIONS
℄ G1	200+69.89	17.50	627.37	627.40
B	200+76.84	17.50	627.23	627.28
C	200+86.84	17.50	627.04	627.12
D	200+96.84	17.50	626.85	626.95
E	201+06.84	17.50	626.66	626.77
F	201+16.84	17.50	626.47	626.57
G	201+26.84	17.50	626.28	626.37
H	201+36.84	17.50	626.09	626.15
I	201+46.84	17.50	625.90	625.94
℄ R3 Pier	201+61.17	17.50	625.63	625.63
J	201+71.17	17.50	625.40	625.40
K	201+81.17	17.50	625.15	625.16
L	201+91.17	17.50	624.90	624.92
M	202+01.17	17.50	624.63	624.66
N	202+11.17	17.50	624.36	624.39
O	202+21.17	17.50	624.08	624.10
P	202+31.17	17.50	623.79	623.80
℄ W. Brg. R3 Abut.	202+38.62	17.50	623.57	623.57
℄ Joint R3 Abut.	202+39.37	17.50	623.55	623.55
Back of R3 Abut.	202+41.62	17.50	623.48	623.48

GIRDER G3.8

LOCATION	STATION	OFFSET	THEORETICAL GRADE ELEVATIONS	THEORETICAL GRADE ELEVATIONS ADJUSTED FOR DEAD LOAD DEFLECTIONS
℄ G1	200+67.31	24.00	627.26	627.29
B	200+76.84	24.00	627.08	627.14
C	200+86.84	24.00	626.90	626.99
D	200+96.84	24.00	626.71	626.82
E	201+06.84	24.00	626.53	626.65
F	201+16.84	24.00	626.35	626.46
G	201+26.84	24.00	626.16	626.25
H	201+36.84	24.00	625.98	626.04
I	201+46.84	24.00	625.79	625.83
℄ R3 Pier	201+61.17	24.00	625.53	625.53
J	201+71.17	24.00	625.30	625.30
K	201+81.17	24.00	625.05	625.06
L	201+91.17	24.00	624.80	624.82
M	202+01.17	24.00	624.53	624.56
N	202+11.17	24.00	624.26	624.29
O	202+21.17	24.00	623.98	624.00
P	202+31.17	24.00	623.69	623.70
℄ W. Brg. R3 Abut.	202+38.62	24.00	623.47	623.47
℄ Joint R3 Abut.	202+39.37	24.00	623.45	623.45
Back of R3 Abut.	202+41.62	24.00	623.38	623.38

GIRDER G3.9

LOCATION	STATION	OFFSET	THEORETICAL GRADE ELEVATIONS	THEORETICAL GRADE ELEVATIONS ADJUSTED FOR DEAD LOAD DEFLECTIONS
℄ G1	200+64.73	30.50	627.15	627.17
A	200+66.84	30.50	627.11	627.14
B	200+76.84	30.50	626.93	626.98
C	200+86.84	30.50	626.75	626.83
D	200+96.84	30.50	626.58	626.67
E	201+06.84	30.50	626.40	626.50
F	201+16.84	30.50	626.22	626.32
G	201+26.84	30.50	626.04	626.13
H	201+36.84	30.50	625.87	625.94
I	201+46.84	30.50	625.69	625.73
℄ R3 Pier	201+61.17	30.50	625.43	625.43

GIRDER G3.10

LOCATION	STATION	OFFSET	THEORETICAL GRADE ELEVATIONS	THEORETICAL GRADE ELEVATIONS ADJUSTED FOR DEAD LOAD DEFLECTIONS
℄ G1	200+62.15	37.00	627.03	627.05
A	200+66.84	37.00	626.95	626.97
B	200+76.84	37.00	626.78	626.82
C	200+86.84	37.00	626.61	626.67
℄ G3.11	200+91.76	37.00	626.52	626.59

GIRDER G3.10A

LOCATION	STATION	OFFSET	THEORETICAL GRADE ELEVATIONS	THEORETICAL GRADE ELEVATIONS ADJUSTED FOR DEAD LOAD DEFLECTIONS
℄ G1	200+59.57	43.50	626.91	626.92
A	200+66.84	43.50	626.79	626.80
B	200+76.84	43.50	626.63	626.65
℄ G3.11	200+78.73	43.50	626.59	626.62

TOP OF SLAB ELEV. - 1
RAMP 3 FLARE
STRUCTURE NO. 016-0724

TYLIN INTERNATIONAL

DESIGNED	JPM, EKH
CHECKED	AMD,
DRAWN	JPM, EKH
CHECKED	AMD,
DATE	08/02/10

REVISIONS

NAME	DATE

SHEET NO. 25
137 SHEETS

F.A.I RTE.	SECTION	COUNTY	TOTAL SHEETS	SHEET NO.
55	0711.2R & 1011.1BR	COOK	200	55
		CONTRACT NO. 60L39		
FED. ROAD DIST. NO. 1	ILLINOIS	FED. AID PROJECT		

8/2/2010

2:22:59 PM

a:\01345\beam and bearing fabrication\55f3tsedetail.dgn

\\05f3tsedetail.dgn 8/3/2010 2:22:42 PM

STATE OF ILLINOIS
DEPARTMENT OF TRANSPORTATION

GIRDER G3.12

LOCATION	STATION	OFFSET	THEORETICAL GRADE ELEVATIONS	THEORETICAL GRADE ELEVATIONS ADJUSTED FOR DEAD LOAD DEFLECTIONS
℄ G1	201+08.55	-79.87	628.56	628.57
F	201+16.84	-71.19	628.16	628.18
G	201+26.84	-62.16	627.73	627.76
H	201+36.84	-54.40	627.33	627.36
I	201+46.84	-47.71	626.97	626.99
℄ R3 Pier	201+61.17	-39.79	626.49	626.50
J	201+71.17	-35.14	626.19	626.20
K	201+81.17	-31.29	625.88	625.90
L	201+91.17	-28.12	625.58	625.60
M	202+01.17	-25.59	625.27	625.30
N	202+11.17	-23.67	624.98	625.00
O	202+21.17	-22.35	624.68	624.69
P	202+31.17	-21.61	624.37	624.38
℄ W. Brg. R3 Abut.	202+38.62	-21.50	624.15	624.15
℄ Joint R3 Abut.	202+39.37	-21.50	624.13	624.13
Back of R3 Abut.	202+41.62	-21.50	624.06	624.06

P.G.L. RAMP 3 FLARE

LOCATION	STATION	OFFSET	THEORETICAL GRADE ELEVATIONS	THEORETICAL GRADE ELEVATIONS ADJUSTED FOR DEAD LOAD DEFLECTIONS
℄ G1	200+76.84	0.00	627.65	627.67
C	200+86.84	0.00	627.44	627.48
D	200+96.84	0.00	627.23	627.29
E	201+06.84	0.00	627.02	627.09
F	201+16.84	0.00	626.81	626.88
G	201+26.84	0.00	626.60	626.66
H	201+36.84	0.00	626.40	626.44
I	201+46.84	0.00	626.19	626.22
℄ R3 Pier	201+61.17	0.00	625.89	625.90
J	201+71.17	0.00	625.66	625.67
K	201+81.17	0.00	625.41	625.43
L	201+91.17	0.00	625.16	625.20
M	202+01.17	0.00	624.89	624.93
N	202+11.17	0.00	624.62	624.66
O	202+21.17	0.00	624.34	624.37
P	202+31.17	0.00	624.05	624.06
℄ W. Brg. R3 Abut.	202+38.62	0.00	623.83	623.83
℄ Joint R3 Abut.	202+39.37	0.00	623.81	623.81
Back of R3 Abut.	202+41.62	0.00	623.74	623.74

GIRDER G3.11

LOCATION	STATION	OFFSET	THEORETICAL GRADE ELEVATIONS	THEORETICAL GRADE ELEVATIONS ADJUSTED FOR DEAD LOAD DEFLECTIONS
℄ N. Brg. C. Abut 1	200+70.38	47.75	626.66	626.66
B	200+76.84	44.50	626.60	626.62
C	200+86.84	39.48	626.55	626.60
D	200+96.84	34.45	626.49	626.57
℄ G3.9	201+04.59	30.50	626.57	626.67

GIRDER G3.13

LOCATION	STATION	OFFSET	THEORETICAL GRADE ELEVATIONS	THEORETICAL GRADE ELEVATIONS ADJUSTED FOR DEAD LOAD DEFLECTIONS
℄ G1	201+06.02	-73.50	628.50	628.51
E	201+06.84	-73.50	628.46	628.47
℄ G3.12	201+14.48	-73.50	628.09	628.10

GIRDER G3.14

LOCATION	STATION	OFFSET	THEORETICAL GRADE ELEVATIONS	THEORETICAL GRADE ELEVATIONS ADJUSTED FOR DEAD LOAD DEFLECTIONS
℄ G1	201+03.44	-67.00	628.45	628.46
E	201+06.84	-67.00	628.34	628.35
F	201+16.84	-67.00	628.08	628.10
℄ G3.12	201+21.23	-67.00	627.97	627.99

GIRDER G3.15

LOCATION	STATION	OFFSET	THEORETICAL GRADE ELEVATIONS	THEORETICAL GRADE ELEVATIONS ADJUSTED FOR DEAD LOAD DEFLECTIONS
℄ G1	201+00.86	-60.50	628.39	628.40
E	201+06.84	-60.50	628.22	628.23
F	201+16.84	-60.50	627.96	627.98
G	201+26.84	-60.50	627.70	627.73
℄ G3.12	201+28.34	-60.50	627.66	627.69

GIRDER G3.16

LOCATION	STATION	OFFSET	THEORETICAL GRADE ELEVATIONS	THEORETICAL GRADE ELEVATIONS ADJUSTED FOR DEAD LOAD DEFLECTIONS
℄ G1	200+98.28	-54.00	628.33	628.34
E	201+06.84	-54.00	628.10	628.12
F	201+16.84	-54.00	627.84	627.87
G	201+26.84	-54.00	627.58	627.61
H	201+36.84	-54.00	627.33	627.36
℄ G3.12	201+37.38	-54.00	627.32	627.35

GIRDER G3.17

LOCATION	STATION	OFFSET	THEORETICAL GRADE ELEVATIONS	THEORETICAL GRADE ELEVATIONS ADJUSTED FOR DEAD LOAD DEFLECTIONS
℄ G1	200+95.70	-47.50	628.26	628.27
D	200+96.84	-47.50	628.22	628.23
E	201+06.84	-47.50	627.97	628.00
F	201+16.84	-47.50	627.72	627.75
G	201+26.84	-47.50	627.47	627.51
H	201+36.84	-47.50	627.21	627.24
℄ FB - 3.6	201+42.59	-47.50	627.06	627.09

GIRDER G3.18

LOCATION	STATION	OFFSET	THEORETICAL GRADE ELEVATIONS	THEORETICAL GRADE ELEVATIONS ADJUSTED FOR DEAD LOAD DEFLECTIONS
℄ G1	200+93.12	-41.00	628.19	628.20
D	200+96.84	-41.00	628.09	628.10
E	201+06.84	-41.00	627.84	627.87
F	201+16.84	-41.00	627.59	627.63
G	201+26.84	-41.00	627.35	627.40
H	201+36.84	-41.00	627.10	627.14
I	201+46.84	-41.00	626.86	626.89
℄ FB - 3.5	201+53.17	-41.00	626.71	626.73

GIRDER G3.19

LOCATION	STATION	OFFSET	THEORETICAL GRADE ELEVATIONS	THEORETICAL GRADE ELEVATIONS ADJUSTED FOR DEAD LOAD DEFLECTIONS
℄ G1	200+90.54	-34.50	628.11	628.11
D	200+96.84	-34.50	627.95	627.97
E	201+06.84	-34.50	627.71	627.75
F	201+16.84	-34.50	627.47	627.52
G	201+26.84	-34.50	627.23	627.29
H	201+36.84	-34.50	626.99	627.04
I	201+46.84	-34.50	626.75	626.79
℄ R3 Pier	201+61.17	-34.50	626.41	626.42

GIRDER G3.20

LOCATION	STATION	OFFSET	THEORETICAL GRADE ELEVATIONS	THEORETICAL GRADE ELEVATIONS ADJUSTED FOR DEAD LOAD DEFLECTIONS
℄ G1	200+87.96	-28.00	628.03	628.03
D	200+96.84	-28.00	627.81	627.82
E	201+06.84	-28.00	627.58	627.60
F	201+16.84	-28.00	627.34	627.37
G	201+26.84	-28.00	627.11	627.14
H	201+36.84	-28.00	626.88	626.90
I	201+46.84	-28.00	626.64	626.66
℄ Pier N2	201+61.17	-28.00	626.31	626.31
J	201+71.17	-28.00	626.08	626.08
K	201+81.17	-28.00	625.83	625.84
℄ FB - 3.4	201+81.62	-28.00	625.82	626.00

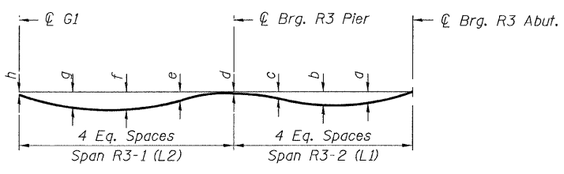

DEAD LOAD DEFLECTION DIAGRAM

(Includes weight of concrete only.)

Note:
The above deflections are not to be used in the field if the engineer is working from the grade elevations adjusted for dead load deflections as shown above.

Girder	a	b	c	d	e	f	g	h	L1	L2
G3.1*	-	3/8"	1/8"	0	1/4"	3/8"	1/4"	0		75'-9 7/8"
G3.2	5/8"	3/4"	3/8"	0	1/8"	3/8"	1/4"	1/8"	77'-5 3/8"	78'-4 3/4"
G3.3	1/2"	5/8"	1/4"	0	3/8"	5/8"	1/2"	1/8"	77'-5 3/8"	80'-11 3/4"
G3.4	3/8"	1/2"	1/4"	1/8"	1/2"	7/8"	3/4"	1/4"	77'-5 3/8"	83'-6 3/4"
G3.5	3/8"	1/2"	1/4"	1/8"	5/8"	1"	7/8"	1/4"	77'-5 3/8"	86'-1 3/4"
G3.6	3/8"	3/8"	1/8"	0	5/8"	1 1/4"	1 1/8"	3/8"	77'-5 3/8"	88'-8 5/8"
G3.7	3/8"	3/8"	1/8"	0	3/4"	1 3/8"	1 1/8"	3/8"	77'-5 3/8"	91'-3 5/8"
G3.8	3/8"	3/8"	1/8"	0	3/4"	1 3/8"	1 1/4"	3/8"	77'-5 3/8"	93'-10 5/8"
G3.9	-	-	-	0	7/8"	1 1/4"	1"	1/4"	-	96'-5 5/8"
G3.10	-	-	-	1/8"	-	1/2"	-	1/8"	-	29'-6 3/8"
G3.10A	-	-	-	3/8"	-	1/4"	-	1/8"	-	19'-2 1/4"
G3.11	-	-	-	1 1/4"	1"	5/8"	3/8"	0	-	38'-3 3/8"
G3.12	1/4"	1/4"	1/4"	1/8"	1/4"	3/8"	1/4"	1/8"	80'-3 1/4"	146'-10 1/4"
G3.13	-	-	-	1/8"	-	1/8"	-	1/8"	-	8'-5 3/4"
G3.14	-	-	-	1/4"	-	1/4"	-	1/8"	-	17'-10 1/8"
G3.15	-	-	-	3/8"	-	1/4"	-	1/8"	-	27'-11 7/8"
G3.16	-	-	-	3/8"	3/8"	3/8"	3/8"	1/8"	-	39'-11 1/2"
G3.17	-	-	-	3/8"	1/2"	1/2"	3/8"	1/8"	-	46'-11"
G3.18	-	-	-	1/4"	1/2"	5/8"	3/8"	1/8"	-	60'-1"
G3.19	-	-	-	1/8"	5/8"	3/4"	1/2"	0	-	70'-7 7/8"
G3.20	-	-	-	0	1/4"	3/8"	1/4"	0	-	73'-2 7/8"

* For G3.1 only. b is end of girder and c is midspan

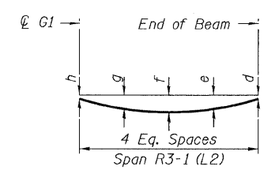

DEAD LOAD DEFLECTION DIAGRAM

(Includes weight of concrete only.)

TOP OF SLAB ELEV. - 2
RAMP 3 FLARE
STRUCTURE NO. 016-0724

T·Y·LIN INTERNATIONAL	DESIGNED - JPM, EKH	REVISIONS	
	CHECKED - AMD,	NAME	DATE
	DRAWN - JPM, EKH		
	CHECKED - AMD,		
	DATE - 08/02/10		

SHEET NO. 26
137 SHEETS

F.A.I RTE.	SECTION	COUNTY	TOTAL SHEETS	SHEET NO.
55	0711.2R & 1011.1BR	COOK	200	56
		CONTRACT NO. 60L39		
FED. ROAD DIST. NO. 1	ILLINOIS	FED. AID PROJECT		

8/2/2010

p:\01345\beam and bearing fabrication\55f13sedata2.dgn 2:23:00 PM

\\RRS\sedata2.dgn 8/3/2010 3:33:00 PM

STATE OF ILLINOIS
DEPARTMENT OF TRANSPORTATION

GIRDER G4.1

LOCATION	STATION	OFFSET	THEORETICAL GRADE ELEVATIONS	THEORETICAL GRADE ELEVATIONS ADJUSTED FOR DEAD LOAD DEFLECTIONS
℄ G1	400+68.73	21.50	629.05	629.05
D	400+76.84	21.50	628.94	628.99
E	400+86.84	21.50	628.80	628.83
F	400+96.84	21.50	628.66	628.69
G	401+06.84	21.50	628.52	628.56
H	401+16.84	21.50	628.38	628.42
I	401+26.84	21.50	628.24	628.27
J	401+36.84	21.50	628.10	628.12
K	401+46.84	21.50	627.96	627.97
℄ R4 Pier	401+60.61	21.50	627.77	627.77
L	401+70.61	21.50	627.57	627.57
M	401+80.61	21.50	627.37	627.38
N	401+90.61	21.50	627.17	627.18
O	402+00.61	21.50	626.97	626.99
P	402+10.61	21.50	626.77	626.80
Q	402+20.61	21.50	626.57	626.61
℄ FB-4.12	402+20.61	21.50	626.57	626.61

GIRDER G4.2

LOCATION	STATION	OFFSET	THEORETICAL GRADE ELEVATIONS	THEORETICAL GRADE ELEVATIONS ADJUSTED FOR DEAD LOAD DEFLECTIONS
℄ G1	400+70.88	15.00	629.07	629.07
D	400+76.84	15.00	628.98	628.99
E	400+86.84	15.00	628.82	628.83
F	400+96.84	15.00	628.67	628.69
G	401+06.84	15.00	628.51	628.53
H	401+16.84	15.00	628.36	628.38
I	401+26.84	15.00	628.20	628.22
J	401+36.84	15.00	628.05	628.06
K	401+46.84	15.00	627.89	627.89
℄ R4 Pier	401+60.61	15.00	627.68	627.68
L	401+70.61	15.00	627.47	627.50
M	401+80.61	15.00	627.27	627.32
N	401+90.61	15.00	627.07	627.14
O	402+00.61	15.00	626.87	626.95
P	402+10.61	15.00	626.67	626.76
Q	402+20.61	15.00	626.47	626.57
R	402+30.61	15.00	626.27	626.36
S	402+40.61	15.00	626.07	626.14
T	402+50.61	15.00	625.87	625.92
℄ W. Brg. R4 Abut.	402+63.61	15.00	625.61	625.61
℄ Joint R4 Abut.	402+64.36	15.00	625.61	625.61
Bk. of R4 Abut.	402+66.61	15.00	625.56	625.56

GIRDER G4.3

LOCATION	STATION	OFFSET	THEORETICAL GRADE ELEVATIONS	THEORETICAL GRADE ELEVATIONS ADJUSTED FOR DEAD LOAD DEFLECTIONS
℄ G1	400+73.46	8.50	629.10	629.11
D	400+76.84	8.50	629.04	629.05
E	400+86.84	8.50	628.87	628.89
F	400+96.84	8.50	628.69	628.71
G	401+06.84	8.50	628.52	628.55
H	401+16.84	8.50	628.34	628.37
I	401+26.84	8.50	628.17	628.19
J	401+36.84	8.50	627.99	628.01
K	401+46.84	8.50	627.82	627.83
℄ R4 Pier	401+60.61	8.50	627.58	627.59
L	401+70.61	8.50	627.38	627.40
M	401+80.61	8.50	627.18	627.22
N	401+90.61	8.50	626.98	627.04
O	402+00.61	8.50	626.78	626.86
P	402+10.61	8.50	626.58	626.67
Q	402+20.61	8.50	626.38	626.47
R	402+30.61	8.50	626.18	626.26
S	402+40.61	8.50	625.98	626.04
T	402+50.61	8.50	625.78	625.82
℄ W. Brg. R4 Abut.	402+63.61	8.50	625.52	625.52
℄ Joint R4 Abut.	402+64.36	8.50	625.51	625.51
Bk. of R4 Abut.	402+66.61	8.50	625.46	625.46

GIRDER G4.4

LOCATION	STATION	OFFSET	THEORETICAL GRADE ELEVATIONS	THEORETICAL GRADE ELEVATIONS ADJUSTED FOR DEAD LOAD DEFLECTIONS
℄ G1	400+76.04	2.00	629.12	629.13
D	400+76.84	2.00	629.10	629.11
E	400+86.84	2.00	628.91	628.93
F	400+96.84	2.00	628.71	628.74
G	401+06.84	2.00	628.52	628.55
H	401+16.84	2.00	628.33	628.36
I	401+26.84	2.00	628.13	628.15
J	401+36.84	2.00	627.94	627.96
K	401+46.84	2.00	627.75	627.76
℄ R4 Pier	401+60.61	2.00	627.48	627.49
L	401+70.61	2.00	627.28	627.31
M	401+80.61	2.00	627.08	627.13
N	401+90.61	2.00	626.88	626.95
O	402+00.61	2.00	626.68	626.77
P	402+10.61	2.00	626.48	626.57
Q	402+20.61	2.00	626.28	626.38
R	402+30.61	2.00	626.08	626.16
S	402+40.61	2.00	625.88	625.95
T	402+50.61	2.00	625.68	625.72
℄ W. Brg. R4 Abut.	402+63.61	2.00	625.42	625.42
℄ Joint R4 Abut.	402+64.36	2.00	625.41	625.41
Bk. of R4 Abut.	402+66.61	2.00	625.36	625.36

GIRDER G4.5

LOCATION	STATION	OFFSET	THEORETICAL GRADE ELEVATIONS	THEORETICAL GRADE ELEVATIONS ADJUSTED FOR DEAD LOAD DEFLECTIONS
℄ G1	400+78.67	-4.50	629.15	629.16
E	400+86.84	-4.50	628.97	628.99
F	400+96.84	-4.50	628.75	628.78
G	401+06.84	-4.50	628.54	628.57
H	401+16.84	-4.50	628.32	628.35
I	401+26.84	-4.50	628.11	628.13
J	401+36.84	-4.50	627.89	627.91
K	401+46.84	-4.50	627.68	627.69
℄ R4 Pier	401+60.61	-4.50	627.38	627.40
L	401+70.61	-4.50	627.18	627.21
M	401+80.61	-4.50	626.98	627.03
N	401+90.61	-4.50	626.78	626.85
O	402+00.61	-4.50	626.58	626.67
P	402+10.61	-4.50	626.38	626.48
Q	402+20.61	-4.50	626.18	626.28
R	402+30.61	-4.50	625.98	626.07
S	402+40.61	-4.50	625.78	625.85
T	402+50.61	-4.50	625.58	625.62
℄ W. Brg. R4 Abut.	402+63.61	-4.50	625.32	625.32
℄ Joint R4 Abut.	402+64.36	-4.50	625.31	625.31
Bk. of R4 Abut.	402+66.61	-4.50	625.26	625.26

GIRDER G4.6

LOCATION	STATION	OFFSET	THEORETICAL GRADE ELEVATIONS	THEORETICAL GRADE ELEVATIONS ADJUSTED FOR DEAD LOAD DEFLECTIONS
℄ G1	400+81.21	-11.00	629.17	629.19
E	400+86.84	-11.00	629.03	629.05
F	400+96.84	-11.00	628.79	628.82
G	401+06.84	-11.00	628.55	628.58
H	401+16.84	-11.00	628.32	628.35
I	401+26.84	-11.00	628.08	628.11
J	401+36.84	-11.00	627.85	627.87
K	401+46.84	-11.00	627.61	627.62
℄ R4 Pier	401+60.61	-11.00	627.29	627.30
L	401+70.61	-11.00	627.08	627.11
M	401+80.61	-11.00	626.88	626.93
N	401+90.61	-11.00	626.68	626.75
O	402+00.61	-11.00	626.48	626.57
P	402+10.61	-11.00	626.28	626.37
Q	402+20.61	-11.00	626.08	626.18
R	402+30.61	-11.00	625.88	625.97
S	402+40.61	-11.00	625.68	625.75
T	402+50.61	-11.00	625.48	625.52
℄ W. Brg. R4 Abut.	402+63.61	-11.00	625.22	625.22
℄ Joint R4 Abut.	402+64.36	-11.00	625.22	625.22
Bk. of R4 Abut.	402+66.61	-11.00	625.17	625.17

GIRDER G4.7

LOCATION	STATION	OFFSET	THEORETICAL GRADE ELEVATIONS	THEORETICAL GRADE ELEVATIONS ADJUSTED FOR DEAD LOAD DEFLECTIONS
℄ G1	400+83.79	-17.50	629.20	629.42
E	400+86.84	-17.50	629.11	629.13
F	400+96.84	-17.50	628.85	628.88
G	401+06.84	-17.50	628.59	628.62
H	401+16.84	-17.50	628.33	628.36
I	401+26.84	-17.50	628.07	628.09
J	401+36.84	-17.50	627.81	627.82
K	401+46.84	-17.50	627.55	627.56
℄ R4 Pier	401+60.61	-17.50	627.19	627.20
L	401+70.61	-17.50	626.99	627.01
M	401+80.61	-17.50	626.79	626.83
N	401+90.61	-17.50	626.59	626.65
O	402+00.61	-17.50	626.39	626.46
P	402+10.61	-17.50	626.19	626.27
Q	402+20.61	-17.50	625.99	626.08
R	402+30.61	-17.50	625.79	625.87
S	402+40.61	-17.50	625.59	625.65
T	402+50.61	-17.50	625.39	625.42
℄ W. Brg. R4 Abut.	402+63.61	-17.50	625.13	625.13
℄ Joint R4 Abut.	402+64.36	-17.50	625.12	625.12
Bk. of R4 Abut.	402+66.61	-17.50	625.07	625.07

GIRDER G4.8

LOCATION	STATION	OFFSET	THEORETICAL GRADE ELEVATIONS	THEORETICAL GRADE ELEVATIONS ADJUSTED FOR DEAD LOAD DEFLECTIONS
℄ G1	400+86.37	-24.00	629.23	629.25
E	400+96.84	-24.00	629.20	629.22
F	401+06.84	-24.00	628.91	628.93
G	401+16.84	-24.00	628.63	628.66
H	401+26.84	-24.00	628.34	628.37
I	401+36.84	-24.00	628.06	628.08
J	401+46.84	-24.00	627.77	627.79
K	401+56.84	-24.00	627.48	627.49
℄ R4 Pier	401+60.61	-24.00	627.09	627.09
L	401+70.61	-24.00	626.89	626.91
M	401+80.61	-24.00	626.69	626.73
N	401+90.61	-24.00	626.49	626.56
O	402+00.61	-24.00	626.29	626.39
P	402+10.61	-24.00	626.09	626.20
Q	402+20.61	-24.00	625.89	626.01
R	402+30.61	-24.00	625.69	625.80
S	402+40.61	-24.00	625.49	625.58
T	402+50.61	-24.00	625.29	625.35
℄ W. Brg. R4 Abut.	402+63.61	-24.00	625.03	625.03
℄ Joint R4 Abut.	402+64.36	-24.00	625.02	625.02
Bk. of R4 Abut.	402+66.61	-24.00	624.97	624.97

GIRDER G4.9

LOCATION	STATION	OFFSET	THEORETICAL GRADE ELEVATIONS	THEORETICAL GRADE ELEVATIONS ADJUSTED FOR DEAD LOAD DEFLECTIONS
℄ G1	400+88.58	-29.57	629.25	629.26
F	400+96.84	-24.58	628.92	628.94
℄ G4.8	400+97.80	-24.00	628.89	628.91

GIRDER G4.10

LOCATION	STATION	OFFSET	THEORETICAL GRADE ELEVATIONS	THEORETICAL GRADE ELEVATIONS ADJUSTED FOR DEAD LOAD DEFLECTIONS
℄ G1	400+90.79	-35.15	629.27	629.28
F	400+96.84	-31.49	629.02	629.04
G	401+06.84	-25.45	628.65	628.68
℄ G4.8	401+09.23	-24.00	628.56	628.59

GIRDER G4.10A

LOCATION	STATION	OFFSET	THEORETICAL GRADE ELEVATIONS	THEORETICAL GRADE ELEVATIONS ADJUSTED FOR DEAD LOAD DEFLECTIONS
℄ G1	400+93.01	-40.72	629.28	629.29
F	400+96.84	-38.41	629.12	629.13
G	401+06.84	-32.36	628.75	628.77
H	401+16.84	-26.31	628.37	628.40
℄ G4.8	401+20.67	-24.00	628.23	628.26

TOP OF SLAB ELEV. - 1
RAMP 4 FLARE
STRUCTURE NO. 016-0724

T·Y·LIN INTERNATIONAL

DESIGNED - JPM, EKH	
CHECKED - AMD,	
DRAWN - JPM, EKH	
CHECKED - AMD,	
DATE - 08/02/10	

REVISIONS

NAME	DATE

SHEET NO. 27
137 SHEETS

F.A.I RTE.	SECTION	COUNTY	TOTAL SHEETS	SHEET NO.
55	0711.2R & 1011.1BR	COOK	200	57
		CONTRACT NO. 60L39		
FED. ROAD DIST. NO. 1	ILLINOIS	FED. AID PROJECT		

p:\01345\beam and bearing fabrication\55f4tsedetal.dgn 2:23:01 PM 8/2/2010

STATE OF ILLINOIS
DEPARTMENT OF TRANSPORTATION

GIRDER G4.12

LOCATION	STATION	OFFSET	THEORETICAL GRADE ELEVATIONS	THEORETICAL GRADE ELEVATIONS ADJUSTED FOR DEAD LOAD DEFLECTIONS
℄ G1	400+40.94	90.42	628.78	628.79
A	400+46.84	86.69	628.79	628.82
B	400+56.84	80.66	628.80	628.85
C	400+66.84	74.99	628.78	628.85
D	400+76.84	69.67	628.76	628.85
E	400+86.84	64.67	628.76	628.87
F	400+96.84	59.98	628.72	628.83
G	401+06.84	55.60	628.67	628.78
H	401+16.84	51.52	628.60	628.70
I	401+26.84	47.72	628.52	628.60
J	401+36.84	44.20	628.42	628.48
K	401+46.84	40.95	628.31	628.35
℄ R4 Pier	401+60.61	36.90	628.00	628.01
L	401+70.61	34.27	627.76	627.77
M	401+80.61	31.89	627.53	627.53
N	401+90.61	29.76	627.30	627.30
O	402+00.61	27.18	627.06	627.06
P	402+10.61	25.48	626.83	626.84
Q	402+20.61	24.03	626.61	626.62
R	402+30.61	23.65	626.40	626.42
S	402+40.61	22.71	626.19	626.20
T	402+50.61	22.00	625.98	625.99
℄ W. Brg. R4 Abut.	402+63.61	21.43	625.71	625.71
℄ Joint R4 Abut.	402+64.36	21.43	625.70	625.70
Bk. of R4 Abut.	402+66.61	21.43	625.65	625.65

P.G.L. RAMP 4 FLARE

LOCATION	STATION	OFFSET	THEORETICAL GRADE ELEVATIONS	THEORETICAL GRADE ELEVATIONS ADJUSTED FOR DEAD LOAD DEFLECTIONS
℄ G1	400+76.84	0.00	629.13	629.14
E	400+86.84	0.00	628.95	628.96
F	400+96.84	0.00	628.75	628.77
G	401+06.84	0.00	628.54	628.57
H	401+16.84	0.00	628.34	628.37
I	401+26.84	0.00	628.14	628.17
J	401+36.84	0.00	627.93	627.95
K	401+46.84	0.00	627.73	627.75
℄ R4 Pier	401+60.66	0.00	627.45	627.47
L	401+70.66	0.00	627.25	627.27
M	401+80.66	0.00	627.05	627.08
N	401+90.66	0.00	626.85	626.90
O	402+00.66	0.00	626.65	626.72
P	402+10.66	0.00	626.45	626.54
Q	402+20.66	0.00	626.25	626.35
R	402+30.66	0.00	626.05	626.15
S	402+40.66	0.00	625.85	625.94
T	402+50.66	0.00	625.65	625.72
℄ W. Brg. R4 Abut.	402+63.61	0.00	625.39	625.43
℄ Joint R4 Abut.	402+64.36	0.00	625.38	625.38
Bk. of R4 Abut	402+66.61	0.00	625.33	625.33

GIRDER G4.11

LOCATION	STATION	OFFSET	THEORETICAL GRADE ELEVATIONS	THEORETICAL GRADE ELEVATIONS ADJUSTED FOR DEAD LOAD DEFLECTIONS
℄ G1	400+95.22	-46.30	629.30	629.30
F	400+96.84	-45.32	629.22	629.22
G	401+06.84	-39.28	628.85	628.86
H	401+16.84	-33.23	628.47	628.49
I	401+26.84	-27.18	628.10	628.12
℄ G4.8	401+32.11	-24.00	627.90	627.92

GIRDER G4.13

LOCATION	STATION	OFFSET	THEORETICAL GRADE ELEVATIONS	THEORETICAL GRADE ELEVATIONS ADJUSTED FOR DEAD LOAD DEFLECTIONS
℄ G1	400+47.68	73.50	628.84	628.86
B	400+56.84	73.50	628.83	628.88
℄ FB-4.2	400+61.62	73.50	628.82	628.88

GIRDER G4.14

LOCATION	STATION	OFFSET	THEORETICAL GRADE ELEVATIONS	THEORETICAL GRADE ELEVATIONS ADJUSTED FOR DEAD LOAD DEFLECTIONS
℄ G1	400+50.24	67.00	628.86	628.88
B	400+56.84	67.00	628.85	628.89
C	400+66.84	67.00	628.81	628.88
℄ FB-4.3	400+73.62	67.00	628.78	628.87

GIRDER G4.15

LOCATION	STATION	OFFSET	THEORETICAL GRADE ELEVATIONS	THEORETICAL GRADE ELEVATIONS ADJUSTED FOR DEAD LOAD DEFLECTIONS
℄ G1	400+52.82	60.50	628.89	628.91
B	400+56.84	60.50	628.89	628.93
C	400+66.84	60.50	628.83	628.90
D	400+76.84	60.50	628.78	628.87
E	400+86.84	60.50	628.73	628.84
℄ FB-4.4	400+88.62	60.50	628.72	628.83

GIRDER G4.16

LOCATION	STATION	OFFSET	THEORETICAL GRADE ELEVATIONS	THEORETICAL GRADE ELEVATIONS ADJUSTED FOR DEAD LOAD DEFLECTIONS
℄ G1	400+55.40	54.00	628.92	628.94
B	400+56.84	54.00	628.93	628.96
C	400+66.84	54.00	628.86	628.92
D	400+76.84	54.00	628.79	628.88
E	400+86.84	54.00	628.73	628.83
F	400+96.84	54.00	628.66	628.77
℄ FB-4.5	401+03.62	54.00	628.61	628.72

GIRDER G4.17

LOCATION	STATION	OFFSET	THEORETICAL GRADE ELEVATIONS	THEORETICAL GRADE ELEVATIONS ADJUSTED FOR DEAD LOAD DEFLECTIONS
℄ G1	400+57.98	47.50	628.94	628.96
C	400+66.84	47.50	628.88	628.93
D	400+76.84	47.50	628.81	628.89
E	400+86.84	47.50	628.73	628.84
F	400+96.84	47.50	628.65	628.77
G	401+06.84	47.50	628.57	628.69
H	401+16.84	47.50	628.50	628.60
℄ FB-4.6	401+18.62	47.50	628.49	628.59

GIRDER G4.18

LOCATION	STATION	OFFSET	THEORETICAL GRADE ELEVATIONS	THEORETICAL GRADE ELEVATIONS ADJUSTED FOR DEAD LOAD DEFLECTIONS
℄ G1	400+60.56	41.00	628.97	628.99
C	400+66.84	41.00	628.92	628.96
D	400+76.84	41.00	628.83	628.90
E	400+86.84	41.00	628.74	628.84
F	400+96.84	41.00	628.65	628.77
G	401+06.84	41.00	628.56	628.68
H	401+16.84	41.00	628.46	628.57
I	401+26.84	41.00	628.37	628.46
℄ FB-4.7	401+33.62	41.00	628.31	628.38

GIRDER G4.19

LOCATION	STATION	OFFSET	THEORETICAL GRADE ELEVATIONS	THEORETICAL GRADE ELEVATIONS ADJUSTED FOR DEAD LOAD DEFLECTIONS
℄ G1	400+63.14	34.50	628.99	629.00
C	400+66.84	34.50	628.96	628.98
D	400+76.84	34.50	628.85	628.89
E	400+86.84	34.50	628.75	628.81
F	400+96.84	34.50	628.64	628.71
G	401+06.84	34.50	628.54	628.62
H	401+16.84	34.50	628.43	628.51
I	401+26.84	34.50	628.32	628.39
J	401+36.84	34.50	628.22	628.27
K	401+46.84	34.50	628.11	628.14
℄ FB-4.8	401+48.61	34.50	628.09	628.12

GIRDER G4.20

LOCATION	STATION	OFFSET	THEORETICAL GRADE ELEVATIONS	THEORETICAL GRADE ELEVATIONS ADJUSTED FOR DEAD LOAD DEFLECTIONS
℄ G1	400+65.72	28.00	629.02	629.02
C	400+66.84	28.00	629.01	629.02
D	400+76.84	28.00	628.89	628.91
E	400+86.84	28.00	628.77	628.81
F	400+96.84	28.00	628.65	628.70
G	401+06.84	28.00	628.53	628.58
H	401+16.84	28.00	628.40	628.45
I	401+26.84	28.00	628.28	628.33
J	401+36.84	28.00	628.16	628.20
K	401+46.84	28.00	628.04	628.06
℄ R4 Pier	401+60.66	28.00	627.87	627.87
L	401+70.66	28.00	627.67	627.67
℄ FB-4.9	401+75.61	28.00	627.57	627.57

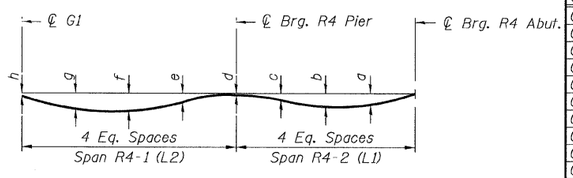

DEAD LOAD DEFLECTION DIAGRAM

(Includes weight of concrete only.)

Note:
The above deflections are not to be used in the field if the engineer is working from the grade elevations adjusted for dead load deflections as shown above.

Girder	a	b	c	d	e	f	g	h	L1	L2
G4.1*	-	1/2"	1/8"	0	1/4"	1/2"	3/8"	0	60'-0"	92'-3 3/4"
G4.2	7/8"	1 1/8"	1/2"	0	1/8"	1/4"	1/4"	0	103'-0"	89'-8 3/4"
G4.3	7/8"	1 1/8"	1/2"	1/8"	1/4"	1/4"	1/4"	1/8"	103'-0"	87'-1 3/4"
G4.4	7/8"	1 1/8"	5/8"	1/8"	1/4"	3/8"	3/8"	1/8"	103'-0"	84'-6 1/8"
G4.5	7/8"	1 1/8"	5/8"	1/4"	1/4"	3/8"	3/8"	1/8"	103'-0"	81'-11 1/8"
G4.6	7/8"	1 1/8"	1/2"	1/8"	1/4"	3/8"	3/8"	1/4"	103'-0"	79'-4 7/8"
G4.7	7/8"	1 1/8"	1/2"	1/8"	1/8"	1/4"	3/8"	1/4"	103'-0"	76'-9 1/8"
G4.8	1 1/4"	1 3/8"	1/2"	0	1/8"	1/4"	3/8"	1/4"	103'-0"	74'-3"
G4.9	-	-	-	1/4"	-	1/4"	-	1/8"	-	10'-9 3/8"
G4.10	-	-	-	3/8"	-	1/4"	-	1/8"	-	21'-6 7/8"
G4.10A	-	-	-	3/8"	-	1/4"	-	1/8"	-	32'-4"
G4.11	-	-	-	1/4"	1/4"	1/4"	1/8"	0	-	43'-1 1/4"
G4.12	1/8"	1/8"	0	1/8"	7/8"	1 3/8"	1"	1/8"	104'-4 13/16"	131'-7 1/16"
G4.13	-	-	-	3/4"	-	1/2"	-	1/4"	-	13'-11 1/2"
G4.14	-	-	-	1"	-	3/4"	-	1/4"	-	23'-4 1/2"
G4.15	-	-	-	1 1/4"	1 1/8"	1"	5/8"	1/4"	-	35'-9 1/2"
G4.16	-	-	-	1 3/8"	1 1/4"	1 1/8"	3/4"	1/4"	-	48'-2 5/8"
G4.17	-	-	-	1 1/4"	1 3/8"	1 3/8"	7/8"	1/4"	-	60'-7 5/8"
G4.18	-	-	-	3/4"	1 3/8"	1 1/2"	1"	1/4"	-	73'-0 5/8"
G4.19	-	-	-	3/8"	7/8"	1"	3/4"	1/8"	-	85'-5 5/8"
G4.20	-	-	-	0	3/8"	5/8"	1/2"	0	-	94'-10 3/4"

* For G4.1 only, b is end of girder and c is midspan

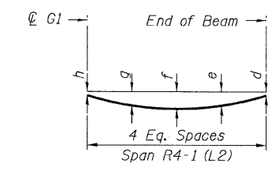

DEAD LOAD DEFLECTION DIAGRAM

(Includes weight of concrete only.)

TOP OF SLAB ELEV. - 2
RAMP 4 FLARE
STRUCTURE NO. 016-0724

TYLIN INTERNATIONAL

DESIGNED	JPM, EKH
CHECKED	AMD,
DRAWN	JPM, EKH
CHECKED	AMD,
DATE	08/02/10

REVISIONS	
NAME	DATE

SHEET NO. 28
137 SHEETS

F.A.I RTE.	SECTION	COUNTY	TOTAL SHEETS	SHEET NO.
55	0711.2R & 1011.1BR	COOK	200	58
		CONTRACT NO. 60L39		
FED. ROAD DIST. NO. 1	ILLINOIS	FED. AID PROJECT		

8/2/2010

p:\01345\beam and bearing fabrication\55f4tsedata2.dgn 2:23:02 PM

STATE OF ILLINOIS
DEPARTMENT OF TRANSPORTATION

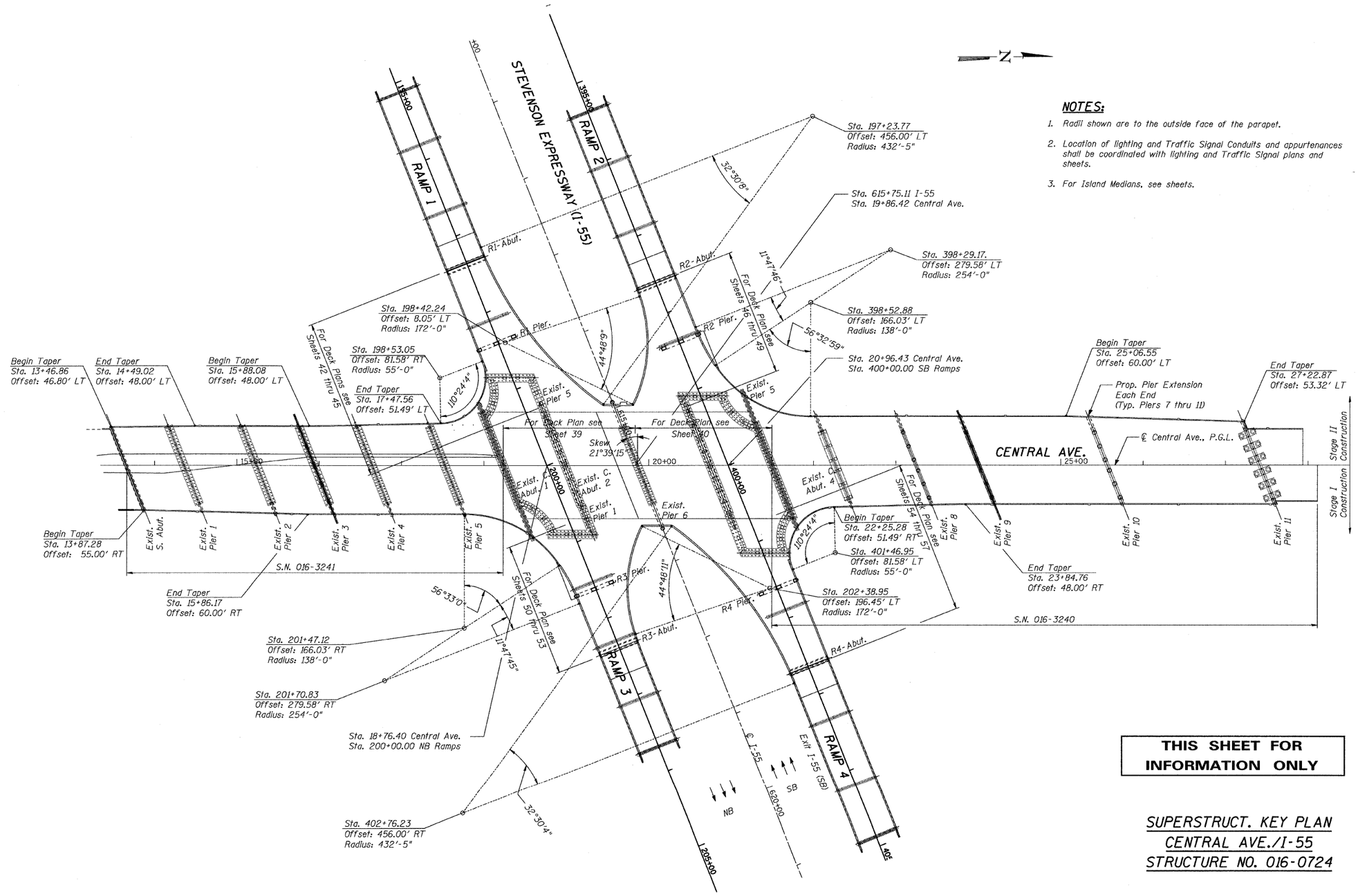

NOTES:

1. Radii shown are to the outside face of the parapet.
2. Location of lighting and Traffic Signal Conduits and appurtenances shall be coordinated with lighting and Traffic Signal plans and sheets.
3. For Island Medians, see sheets.

THIS SHEET FOR INFORMATION ONLY

SUPERSTRUCT. KEY PLAN
CENTRAL AVE./I-55
STRUCTURE NO. 016-0724

TYLIN INTERNATIONAL

DESIGNED	-	MI	
CHECKED	-	AMD, MAI, TD	
DRAWN	-	BK, DJR, CBS	
CHECKED	-	AMD, MAI, MI	
DATE	-	08/02/10	

REVISIONS	
NAME	DATE

SHEET NO. 29
137 SHEETS

F.A.I RTE.	SECTION	COUNTY	TOTAL SHEETS	SHEET NO.
55	0711.2R & 1011.1BR	COOK	200	59
		CONTRACT NO. 60L39		
FED. ROAD DIST. NO. 1	ILLINOIS	FED. AID PROJECT		

p:\01345\beam and bearing fabrication\55c2keu.dgn 8/13/2010 4:32:46 PM

STATE OF ILLINOIS
DEPARTMENT OF TRANSPORTATION

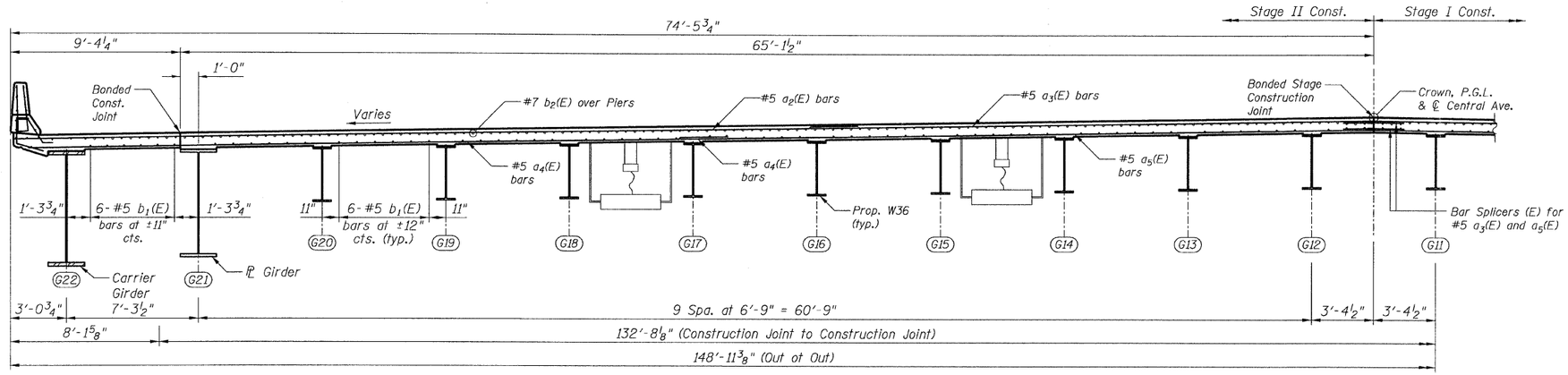

HALF SECTION B-B

(Looking North, Near Pier)

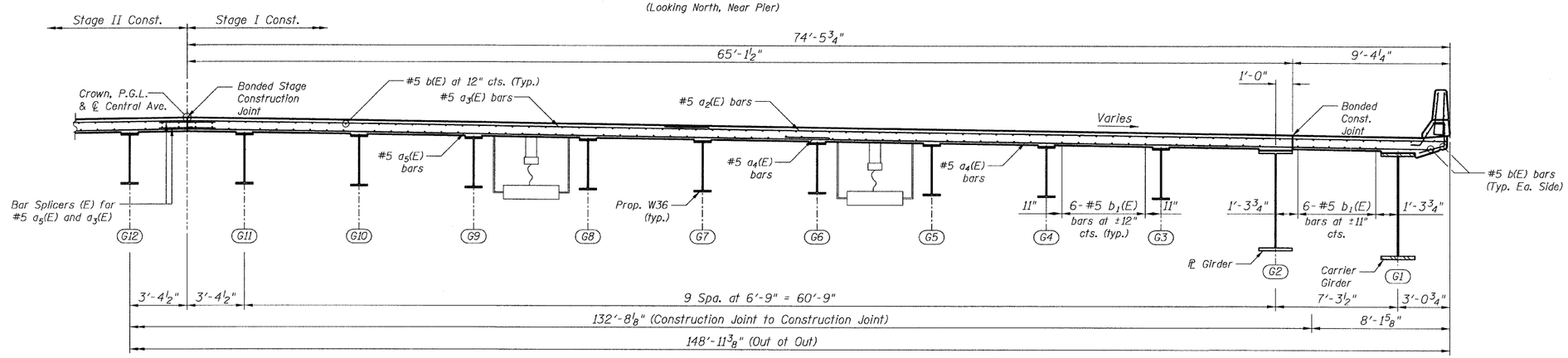

HALF SECTION B-B

(Looking North, Near Midspan)

SUPERSTRUCTURE BILL OF MATERIAL

Bar	No.	Size	Length (ft)	Shape
a(E)	16	#5	36.74	
a_1(E)	118	#5	49.21	
a_2(E)	1,038	#5	41.60	
a_3(E)	1,038	#5	34.65	
a_4(E)	748	#5	38.22	
a_5(E)	748	#5	38.35	
a_6(E)	740	#7	19.68	
a_7(E)	908	#7	39.37	
a_8(E)	122	#7	20.77	
a_9(E)	24	#5	1.97	
b(E)	1,224	#5	38.06	
b_1(E)	1,160	#5	34.45	
b_2(E)	402	#5	45.93	
b_5(E)		#5		
b_6(E)	112	#4		
b_7(E)	56	#5	8'-0"	
c_1(E)		#5		
c_2(E)	40	#5	2'-6"	
c_3(E)	766	#5	1'-6"	
c_4(E)	112	#5	8'-3"	
c_5(E)	40	#4	5'-0"	
x(E)	272	#5	4.20	
Protective Coat			SQ FT	43,528
Bridge Deck Grooving			SQ FT	38,146
Concrete Superstructure			CU FT	28,816
Reinforcement Bars, Epoxy Coated			LB	
Bar Splicers			EACH	952

NOTES:

2. Work this sheet with sheets.
3. For locations of section B-B, see sheets.
4. Concrete inserts and hanger assemblies for traffic signal conduits, refer to traffic signal plans for details. The cost of installation included with the pay item "Concrete Superstructure".
5. Concrete inserts for underpass lighting shall be embeded in concrete. For numbers & locations of these items and installation details, refer to lighting plans. The cost of the embeded items included with the pay item "Concrete Superstructure".
6. All deck construction joints shall be bonded construction joints.

BAR LAPS

Bar Size	Min. Lap
#5	3'-3"
#7	5'-2"
#8	6'-9"

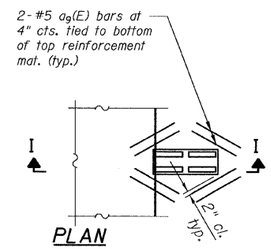

PLAN

DRAINAGE SCUPPER DS-12

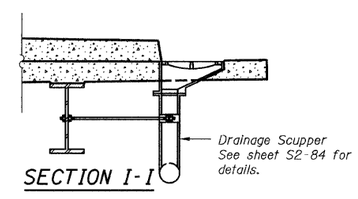

SECTION I-I

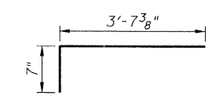

BAR x(E)

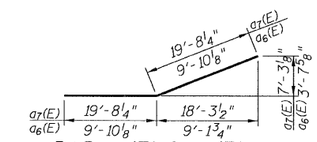

BAR a_6(E) & a_7(E)

THIS SHEET FOR INFORMATION ONLY

SUPERST. CROSS SECTION
STRUCTURE NO. 016-0724

TY·LIN INTERNATIONAL

		REVISIONS	
DESIGNED	-		
CHECKED	- AMD.	NAME	DATE
DRAWN	- EMK		
CHECKED	- AMD.		
DATE	- 08/02/10		

SHEET NO. 30
137 SHEETS

F.A.I RTE.	SECTION	COUNTY	TOTAL SHEETS	SHEET NO.
55	0711.2R & 1011.1BR	COOK	200	60
		CONTRACT NO. 60L39		
FED. ROAD DIST. NO. 1	ILLINOIS	FED. AID PROJECT		

8/2/2010

p:\01345\beam end bearing fabrication\55c2deckseo.dgn 2:23:04 PM

STATE OF ILLINOIS
DEPARTMENT OF TRANSPORTATION

* 4'-0":
* Varies 4'-0" " to 5'-3" ":
* Varies 5'-3" " to 7'-1½"":

R1 Abut. to 198+53.05
Sta. 198+53.05 to 198+65.50
Sta. 198+65.50to 198+97.88

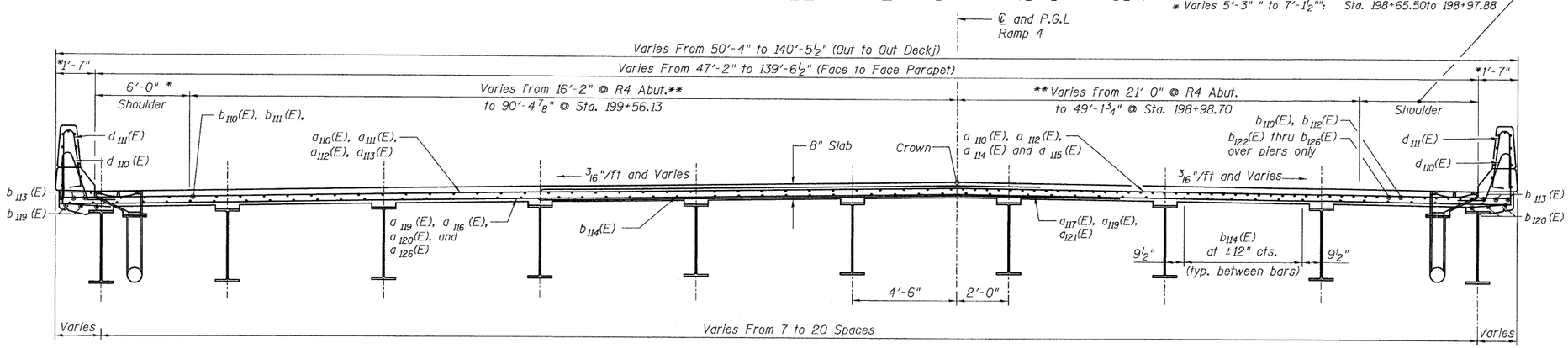

SECTION A-A

(Looking East)

* Measurement perpendicular to parapet
** Measurement perpendicular to alignment

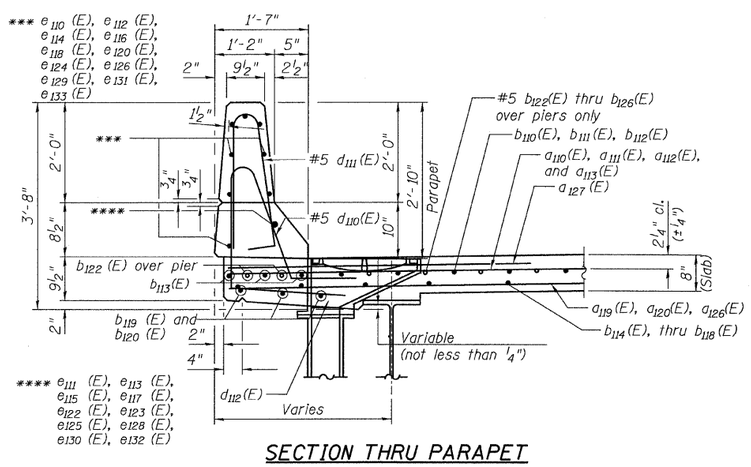

SECTION THRU PARAPET

(Looking East)

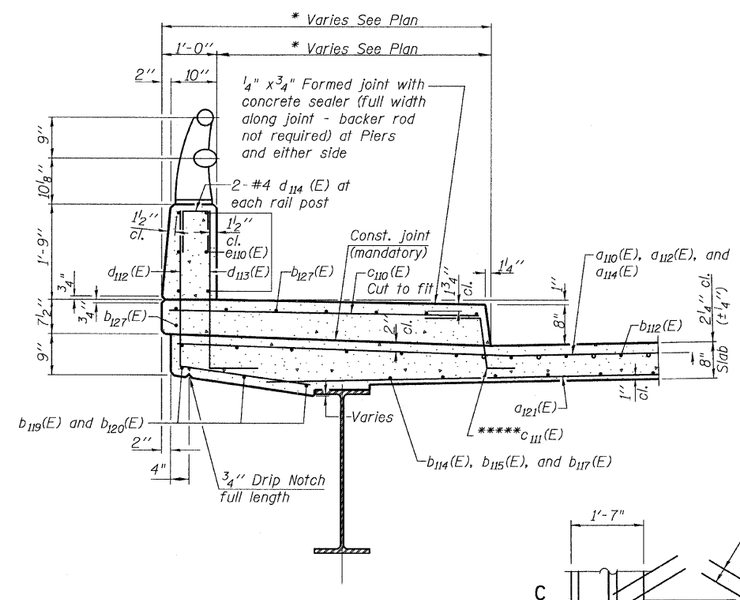

SECTION THRU SIDEWALK

(Looking West)

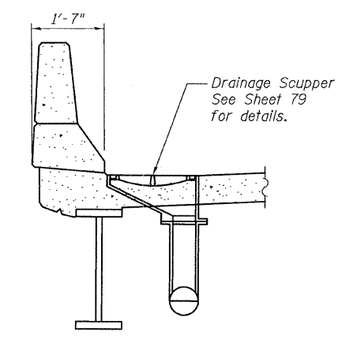

SECTION C-C

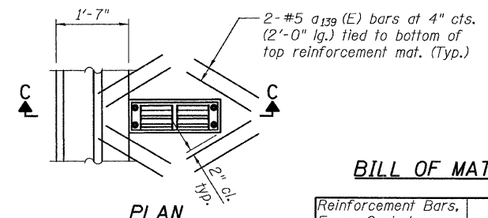

PLAN

DRAINAGE SCUPPER
DS-12

NOTES:

1. Reinforcement bars designated with an (E) shall be epoxy coated.
2. Bars indicated thus "47x8-#5" etc. indicates 47 lines of bars with 8 lengths per line.
3. For location of Section A-A, see Sheets.
4. Work this sheet with Sheets.
5. All construction joints shall be bonded construction joints.

***** In lieu of bottom leg c (E) bars may be cored and set according to article 509.06 of the Standard Specifications. Cored holes shall be roughened or scored per Manufacturer's Recommendations, maximum depth of cored hole shall not exceed 6".

BILL OF MATERIAL

Bar	No.	Size	Length (ft)	Shape
a110 (E)	556	#5	25'-4"	
a111 (E)	325	#5	24'-0"	
a112 (E)	162	#5	23'-10"	
a113 (E)	78	#5	22'-0"	
a114 (E)	35	#5	16'-0"	
a115 (E)	53	#5	28'-6"	
a116 (E)	266	#5	25'-0"	
a117 (E)	174	#5	25'-8"	
a118 (E)	92	#5	24'-2"	
a119 (E)	266	#5	22'-6"	
a120 (E)	150	#5	25'-4"	
a121 (E)	73	#5	28'-2"	
a122 (E)	111	#6	6'-6"	
a123 (E)	28	#6	12'-0"	
a124 (E)	4	#5	26'-10"	
a125 (E)	148	#6	20'-0"	
a126 (E)	78	#5	26'-6"	
a127 (E)	168	#6	24'-0"	
a139 (E)	32	#5	2'-0"	
b110 (E)	545	#5	27'-0"	
b111 (E)	18	#6	31'-8"	
b112 (E)	27	#5	31'-0"	
b113 (E)	54	#5	27'-3"	
b114 (E)	530	#5	27'-0"	
b115 (E)	11	#5	18'-11"	
b116 (E)	32	#5	26'-8"	
b117 (E)	18	#5	31'-3"	
b118 (E)	10	#5	33'-8"	
b119 (E)	24	#5	32'-10"	
b120 (E)	18	#5	32'-0"	
b121 (E)	12	#5	26'-2"	
b122 (E)	62	#5	30'-0"	
b123 (E)	1	#6	28'-3"	
b124 (E)	1	#6	24'-3"	
b125 (E)	1	#6	20'-6"	
b126 (E)	1	#6	17'-6"	
b127 (E)	14	#6	21'-10"	
c110 (E)	40	#5	5'-10"	
c111 (E)	40	#5	2'-4"	
d110 (E)	454	#5	7'-8"	
d111 (E)	454	#5	6'-10"	
d112 (E)	40	#4	4'-10"	
d113 (E)	40	#6	3'-9"	
d114 (E)	10	#4	2'-0"	
e110 (E)	12	#5	19'-0"	
e111 (E)	1	#8	11'-10"	
e112 (E)	6	#5	11'-10"	
e113 (E)	1	#8	16'-10"	
e114 (E)	8	#5	16'-10"	
e115 (E)	1	#8	15'-2"	
e116 (E)	8	#5	15'-2"	
e117 (E)	3	#8	37'-0"	
e118 (E)	30	#5	17'-4"	
e119 (E)	6	#5	33'-0"	
e120 (E)	3	#5	17'-9"	
e121 (E)	1	#5	33'-5"	
e122 (E)	8	#8	31'-6"	
e123 (E)	1	#8	16'-10"	
e124 (E)	8	#5	16'-10"	
e125 (E)	8	#8	31'-10"	
e126 (E)	4	#5	15'-10"	
e127 (E)	42	#5	12'-6"	
e128 (E)	8	#8	12'-6"	
e129 (E)	2	#5	23'-5"	
e130 (E)	8	#8	23'-5"	
e131 (E)	8	#5	23'-5"	
e132 (E)	1	#8	23'-5"	
e133 (E)	8	#5	23'-5"	
x100 (E)	53	#5	4'-2"	
x101 (E)	53	#5	5'-1"	

BILL OF MATERIAL

Reinforcement Bars, Epoxy Coated	LB	125,100
Concrete Superstructure	CU YD	484
Bridge Deck Grooving	SQ YD	1,382
Protective Coat	SQ YD	1,782

CROSS SECTIONS & DETAILS
RAMP 1 FLARE
STRUCTURE NO. 016-0724

TY·LIN INTERNATIONAL

DESIGNED	-	JE, PK
CHECKED	-	AMD,
DRAWN	-	EMK
CHECKED	-	AMD,
DATE	-	08/02/10

REVISIONS	
NAME	DATE

SHEET NO. 31
137 SHEETS

F.A.I RTE.	SECTION	COUNTY	TOTAL SHEETS	SHEET NO.
55	0711.2R & 1011.1BR	COOK	200	61
		CONTRACT NO. 60L39		
FED. ROAD DIST. NO. 1	ILLINOIS	FED. AID PROJECT		

p:\01345\beam and bearing fabrication\55fldecksec.dgn 2:41:57 PM

8/5/2010

STATE OF ILLINOIS
DEPARTMENT OF TRANSPORTATION

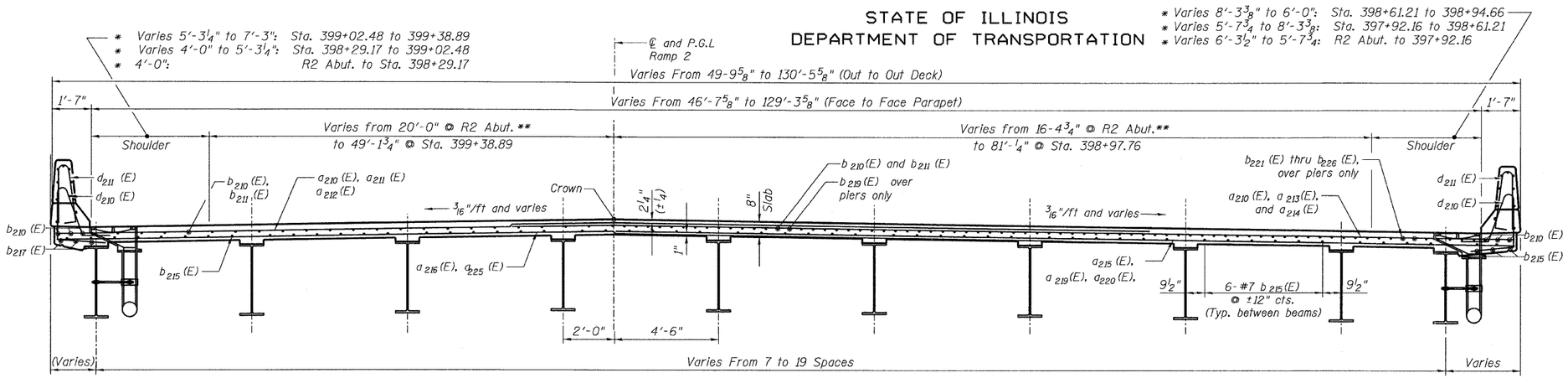

NEAR MIDSPAN

NEAR PIER

SECTION A-A

(Looking East)

* Measurement perpendicular to parapet
** Measurement perpendicular to alignment

*** ¼" x ¾" formed joint with concrete sealer (full width along joint-backer rod not required) at piers and either side. See sheet 47, 49 for locations.

**** In lieu of bottom leg c (E) bars may be cored and set according to article 509.06 of the Standard Specifications. Cored holes shall be roughened or scored per Manufacturer's Recommendations, maximum depth of cored hole shall not exceed 6".

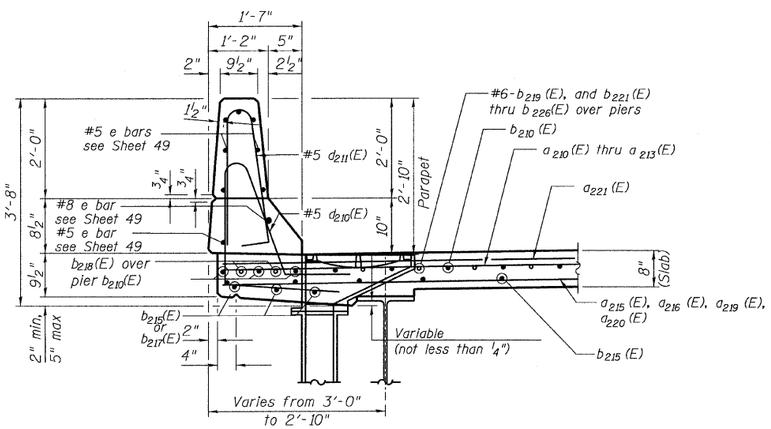

SECTION THRU PARAPET

(Looking East)

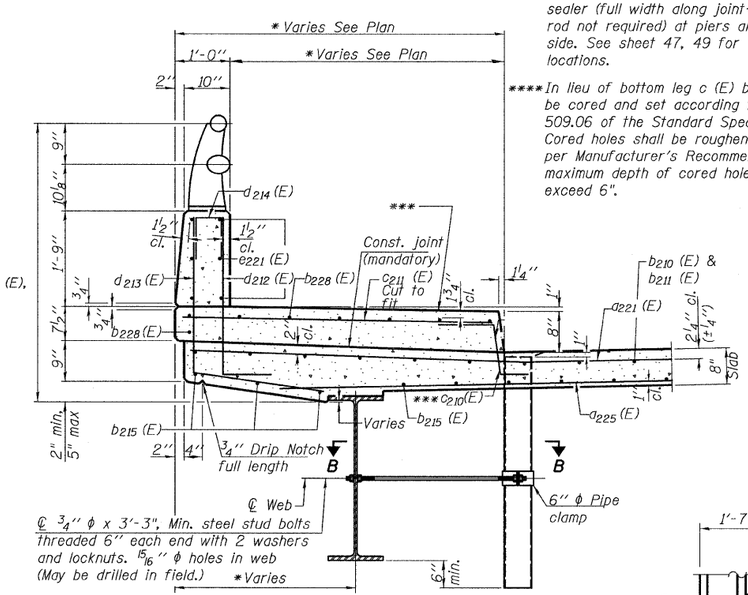

SECTION THRU SIDEWALK

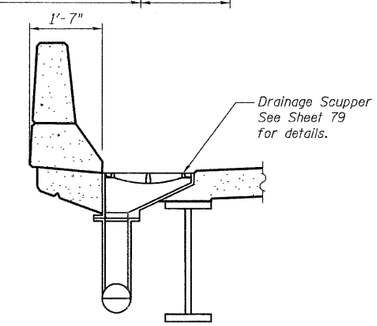

SECTION C-C

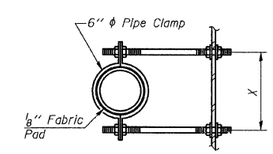

SECTION B-B

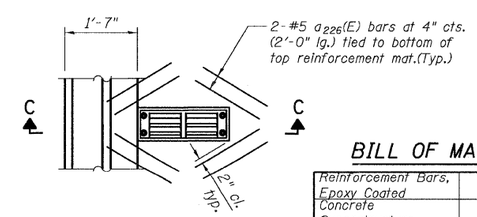

PLAN

DRAINAGE SCUPPER DS-12

NOTES:

1. Reinforcement bars designated (E) shall be epoxy coated.
2. Bars indicated thus "47x7-#5" etc. indicates 47 lines of bars with 7 lengths per line.
3. For location of Section A-A, see Sheet.
4. Work this sheet with Sheets.
5. All deck construction joints shall be bonded construction joints.

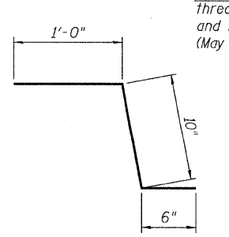

BARS c210 (E)

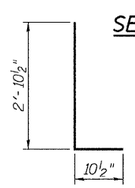

BARS d212 (E)

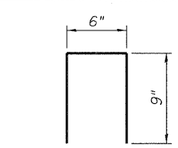

BARS d214 (E)

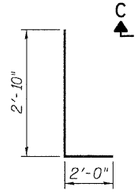

BARS d213 (E)

BILL OF MATERIAL

Bar	No.	Size	Length (ft)	Shape
a210 (E)	296	#5	25'-6"	
a211 (E)	440	#5	29'-0"	
a212 (E)	31	#5	28'-0"	
a213 (E)	58	#5	21'-8"	
a214 (E)	70	#5	38'-8"	
a215 (E)	228	#5	20'-5"	
a216 (E)	240	#5	30'-7"	
a217 (E)	216	#5	25'-4"	
a218 (E)	32	#5	28'-11"	
a219 (E)	41	#5	22'-0"	
a220 (E)	58	#5	42'-0"	
a221 (E)	139	#6	6'-6"	
a222 (E)	84	#6	24'-6"	
a223 (E)	26	#6	6'-6"	
a224 (E)	65	#6	20'-0"	
a225 (E)	102	#5	28'-8"	
a226 (E)	32	#5	2'-0"	
b210 (E)	410	#5	27'-3"	
b211 (E)	10	#5	22'-6"	
b212 (E)	33	#5	30'-0"	
b213 (E)	10	#5	31'-6"	
b214 (E)	5	#5	28'-5"	
b215 (E)	391	#5	30'-10"	
b216 (E)	4	#5	23'-6"	
b217 (E)	24	#5	25'-2"	
b218 (E)	2	#6	30'-0"	
b219 (E)	60	#5	30'-0"	
b220 (E)	1	#6	30'-8"	
b221 (E)	1	#6	28'-2"	
b222 (E)	1	#6	25'-10"	
b223 (E)	1	#6	23'-7"	
b224 (E)	1	#6	21'-4"	
b225 (E)	1	#6	19'-3"	
b226 (E)	1	#6	17'-3"	
b227 (E)	2	#6	30'-0"	
b228 (E)	15	#5	24'-8"	
c210 (E)	66	#5	2'-4"	
c211 (E)	66	#5	5'-8"	
d210 (E)	304	#5	7'-2"	
d211 (E)	304	#5	6'-10"	
d212 (E)	54	#6	3'-9"	
d213 (E)	54	#4	4'-10"	
d214 (E)	10	#5	2'-0"	
e210 (E)	4	#5	33'-4"	
e211 (E)	2	#8	34'-10"	
e212 (E)	24	#5	15'-5"	
e213 (E)	8	#5	15'-2"	
e214 (E)	1	#8	15'-2"	
e215 (E)	8	#5	16'-8"	
e216 (E)	1	#8	16'-8"	
e217 (E)	8	#5	25'-4"	
e218 (E)	1	#8	25'-4"	
e219 (E)	6	#5	13'-7"	
e220 (E)	6	#5	11'-10"	
e221 (E)	18	#5	16'-8"	
e222 (E)	2	#8	27'-4"	
e223 (E)	4	#5	25'-4"	
e224 (E)	18	#5	15'-6"	
e225 (E)	8	#5	16'-8"	
e226 (E)	1	#8	16'-8"	
e227 (E)	1	#8	15'-2"	
e228 (E)	8	#5	15'-2"	
e229 (E)	3	#8	29'-6"	
e230 (E)	6	#5	25'-5"	
e231 (E)	24	#5	16'-2"	
x200 (E)	53	#5	4'-2"	
x201 (E)	53	#5	5'-1"	

BILL OF MATERIAL

Reinforcement Bars, Epoxy Coated	LB	97,600
Concrete Superstructure	CU YD	398.4
Bridge Deck Grooving	SQ YD	1,213
Protective Coat	SQ YD	1,536

CROSS SECTIONS & DETAILS
RAMP 2 FLARE
STRUCTURE NO. 016-0724

TYLIN INTERNATIONAL

DESIGNED	JE, PK
CHECKED	AMD,
DRAWN	EMK
CHECKED	AMD,
DATE	08/02/10

REVISIONS	
NAME	DATE

SHEET NO. 32
137 SHEETS

F.A.I RTE.	SECTION	COUNTY	TOTAL SHEETS	SHEET NO.
55	0711.2R & 1011.1BR	COOK	200	62
		CONTRACT NO. 60L39		
FED. ROAD DIST. NO. 1	ILLINOIS	FED. AID PROJECT		

8/5/2010

p:\01345\beam and bearing fabrication\55f2decksec.dgn 2:41:59 PM

STATE OF ILLINOIS
DEPARTMENT OF TRANSPORTATION

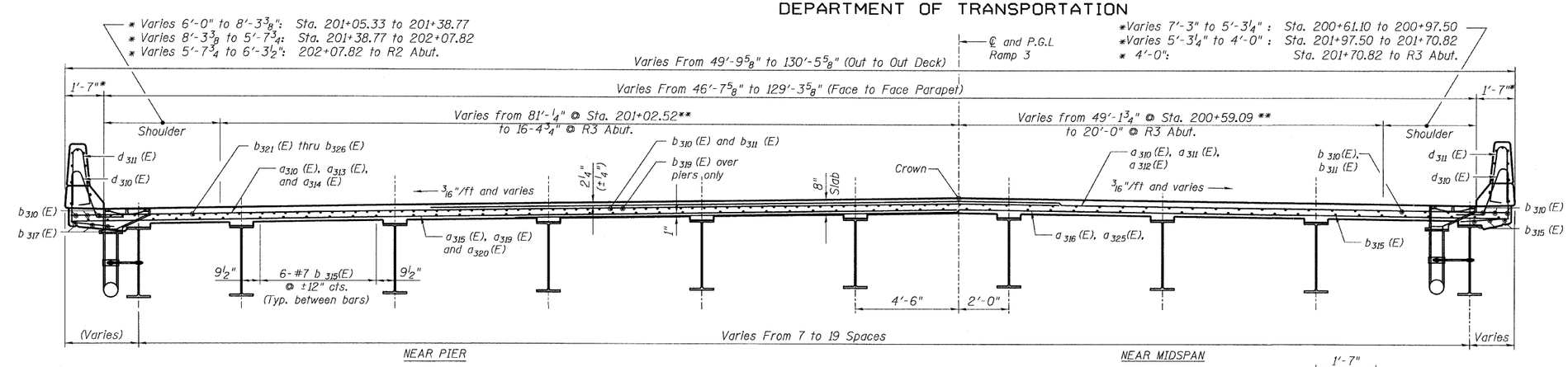

SECTION A-A

(Looking East)

* Measurement perpendicular to parapet

** Measurement perpendicular to alignment

*** 1/4" x 3/4" formed joint with concrete sealer (full width along joint-backer rod not required) at piers and either side. See sheet 51 & 53 for locations.

**** In lieu of bottom leg c (E) bars may be cored and set according to article 509.06 of the Standard Specifications. Cored holes shall be roughened or scored per Manufacturer's Recommendations, maximum depth of cored hole shall not exceed 6".

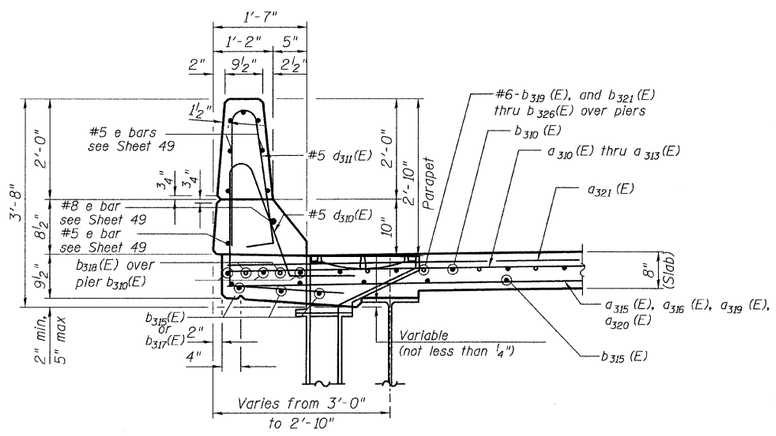

SECTION THRU PARAPET

(Looking East)

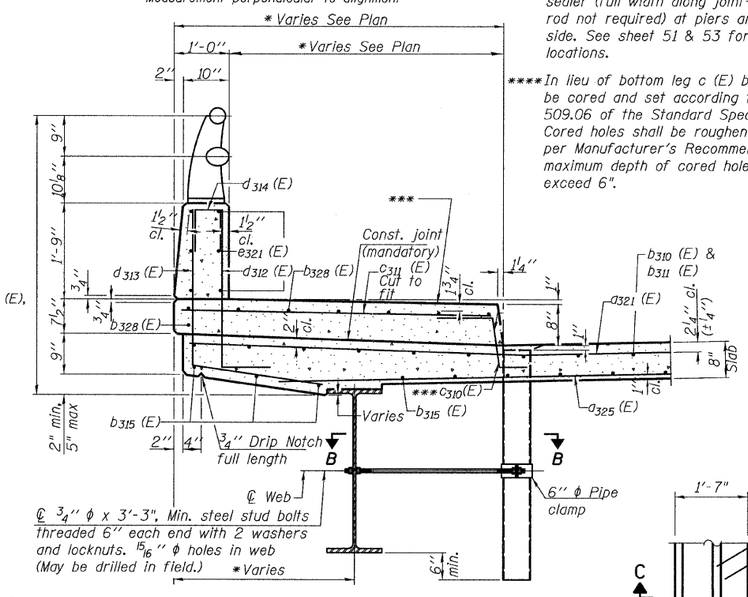

SECTION THRU SIDEWALK

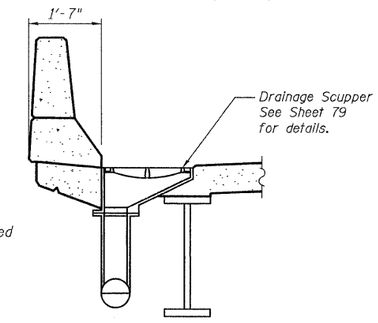

SECTION C-C

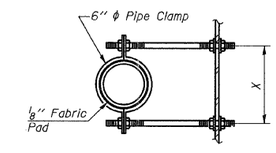

SECTION B-B

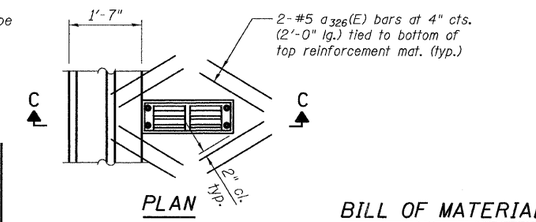

PLAN

DRAINAGE SCUPPER DS-12

NOTES:

1. Reinforcement bars designated (E) shall be epoxy coated.
2. Bars indicated thus "47x7-#5" etc. indicates 47 lines of bars with 7 lengths per line.
3. For location of Section A-A, see Sheets.
4. Work this sheet with Sheets.
5. All deck construction joints shall be bonded construction joints.

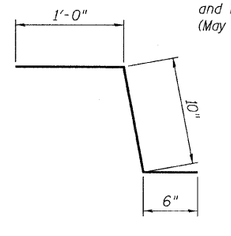

BARS c310 (E)

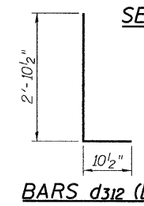

BARS d312 (E)

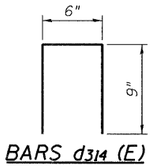

BARS d314 (E)

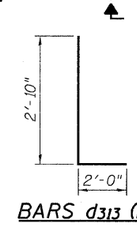

BARS d313 (E)

BILL OF MATERIAL

Bar	No.	Size	Length (ft)	Shape
a 310 (E)	296	#5	25'-6"	
a 311 (E)	440	#5	29'-0"	
a 312 (E)	31	#5	28'-0"	
a 313 (E)	58	#5	21'-8"	
a 314 (E)	70	#5	38'-8"	
a 315 (E)	228	#5	20'-5"	
a 316 (E)	240	#5	30'-7"	
a 317 (E)	216	#5	25'-4"	
a 318 (E)	32	#5	28'-11"	
a 319 (E)	41	#5	22'-0"	
a 320 (E)	58	#5	42'-0"	
a 321 (E)	139	#6	6'-6"	
a 322 (E)	84	#6	24'-6"	
a 323 (E)	26	#6	6'-6"	
a 324 (E)	65	#6	20'-0"	
a 325 (E)	102	#5	28'-8"	
a 326 (E)	32	#5	2'-0"	
b 310 (E)	410	#5	27'-3"	
b 311 (E)	10	#5	22'-6"	
b 312 (E)	33	#5	30'-0"	
b 313 (E)	10	#5	31'-6"	
b 314 (E)	5	#5	28'-5"	
b 315 (E)	391	#5	30'-10"	
b 316 (E)	4	#5	23'-6"	
b 317 (E)	24	#5	25'-2"	
b 318 (E)	2	#6	30'-0"	
b 319 (E)	60	#5	30'-0"	
b 320 (E)	1	#6	30'-8"	
b 321 (E)	1	#6	28'-2"	
b 322 (E)	1	#6	25'-10"	
b 323 (E)	1	#6	23'-7"	
b 324 (E)	1	#6	21'-4"	
b 325 (E)	1	#6	19'-3"	
b 326 (E)	1	#6	17'-3"	
b 327 (E)	2	#6	30'-0"	
b 328 (E)	15	#5	24'-8"	
c 310 (E)	66	#5	2'-4"	
c 311 (E)	66	#5	5'-8"	
d 310 (E)	304	#5	7'-2"	
d 311 (E)	304	#5	6'-10"	
d 312 (E)	54	#6	3'-9"	
d 313 (E)	54	#4	4'-10"	
d 314 (E)	10	#5	2'-0"	
e 310 (E)	4	#5	33'-4"	
e 311 (E)	2	#8	34'-10"	
e 312 (E)	24	#5	15'-5"	
e 313 (E)	8	#5	15'-2"	
e 314 (E)	1	#8	15'-2"	
e 315 (E)	8	#5	16'-8"	
e 316 (E)	1	#8	16'-8"	
e 317 (E)	8	#5	25'-4"	
e 318 (E)	1	#8	25'-4"	
e 319 (E)	6	#5	13'-7"	
e 320 (E)	6	#5	11'-10"	
e 321 (E)	18	#5	16'-8"	
e 322 (E)	2	#8	27'-4"	
e 323 (E)	4	#5	25'-4"	
e 324 (E)	18	#5	15'-6"	
e 325 (E)	8	#5	16'-8"	
e 326 (E)	1	#8	16'-8"	
e 327 (E)	1	#8	15'-2"	
e 328 (E)	8	#5	15'-2"	
e 329 (E)	3	#8	29'-6"	
e 330 (E)	6	#5	25'-5"	
e 331 (E)	24	#5	16'-2"	
x 300 (E)	53	#5	4'-2"	
x 310 (E)	53	#5	5'-1"	

BILL OF MATERIAL

Reinforcement Bars, Epoxy Coated	LB	97,600
Concrete Superstructure	CU YD	398.4
Bridge Deck Grooving	SQ YD	1,213
Protective Coat	SQ YD	1,536

CROSS SECTION & DETAILS
RAMP 3 FLARE
STRUCTURE NO. 016-0724

TYLIN INTERNATIONAL

		REVISIONS	
DESIGNED	-	NAME	DATE
CHECKED	- AMD.		
DRAWN	- EMK		
CHECKED	- AMD.		
DATE	- 08/02/10		

SHEET NO. 33
137 SHEETS

F.A.I RTE.	SECTION	COUNTY	TOTAL SHEETS	SHEET NO.
55	0711.2R & 1011.1BR	COOK	200	63
		CONTRACT NO. 60L39		
FED. ROAD DIST. NO. 1	ILLINOIS	FED. AID PROJECT		

8/5/2010

p:\01345\beam end bearing fabrication\55f3decksec.dgn 2:42:00 PM

STATE OF ILLINOIS
DEPARTMENT OF TRANSPORTATION

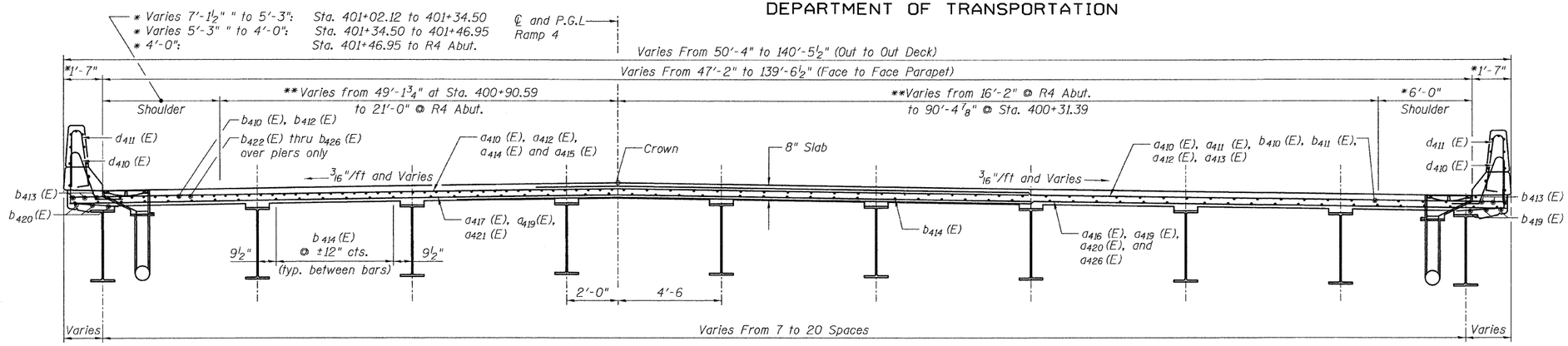

SECTION A-A

(Looking East)

* Measurement perpendicular to parapet

** Measurement perpendicular to alignment

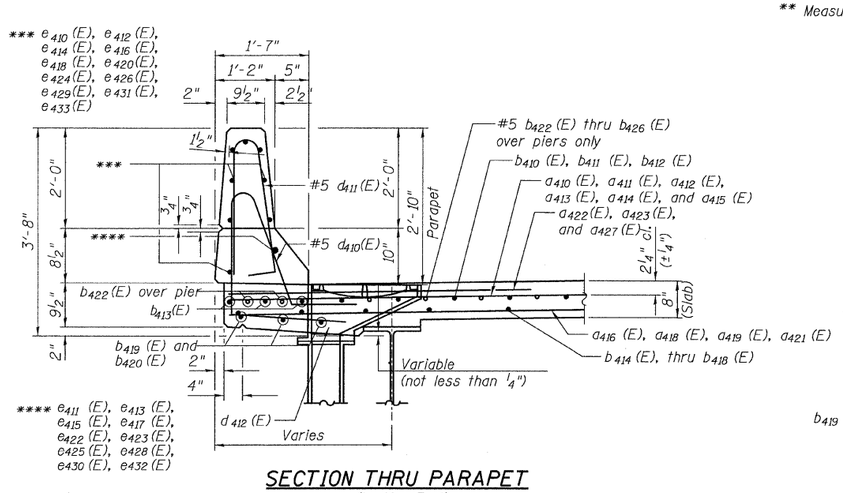

SECTION THRU PARAPET

(Looking East)

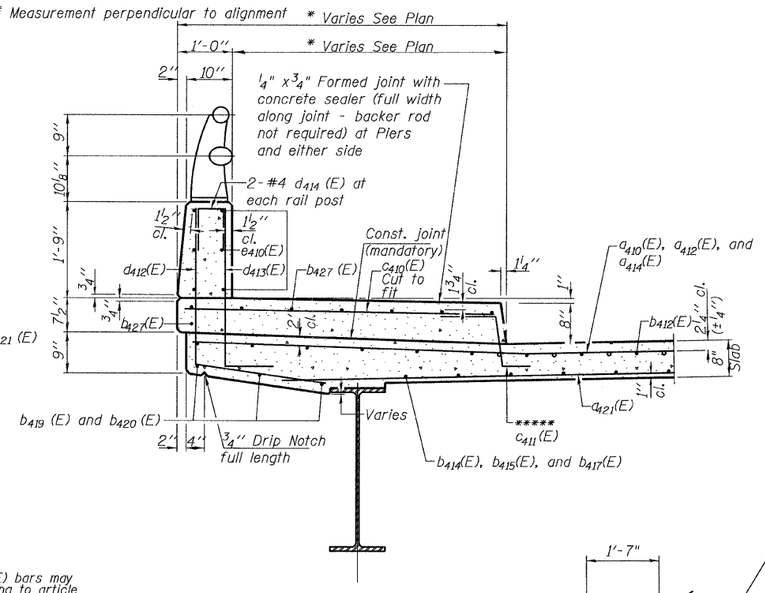

SECTION THRU SIDEWALK

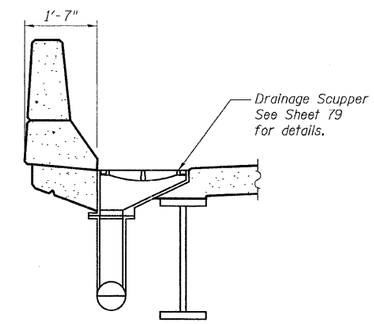

SECTION C-C

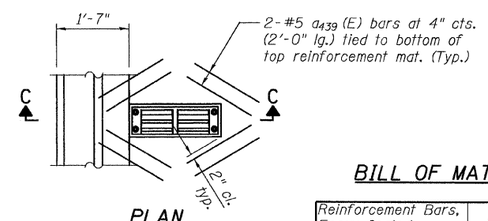

PLAN

DRAINAGE SCUPPER DS-12

NOTES:

1. Reinforcement bars designated (E) shall be epoxy coated.
2. Bars indicated thus "47x8-#5" etc. indicates 47 lines of bars with 8 lengths per line.
3. For location of Section A-A, see Sheets.
4. Work this sheet with Sheets.
5. All deck construction joints shall be bonded construction joints.

***** In lieu of bottom leg c (E) bars may be cored and set according to article 509.06 of the Standard Specifications. Cored holes shall be roughened or scored per Manufacturer's Recommendations, maximum depth of cored hole shall not exceed 6".

BILL OF MATERIAL

Bar	No.	Size	Length (ft)	Shape
a410 (E)	556	#5	25'-4"	
a411 (E)	325	#5	24'-0"	
a412 (E)	162	#5	23'-10"	
a413 (E)	78	#5	22'-0"	
a414 (E)	35	#5	16'-0"	
a415 (E)	53	#5	28'-6"	
a416 (E)	266	#5	25'-0"	
a417 (E)	174	#5	25'-8"	
a418 (E)	92	#5	24'-2"	
a419 (E)	266	#5	22'-6"	
a420 (E)	150	#5	25'-4"	
a421 (E)	73	#5	28'-2"	
a422 (E)	111	#6	6'-6"	
a423 (E)	28	#6	12'-0"	
a424 (E)	4	#5	26'-10"	
a425 (E)	148	#6	20'-0"	
a426 (E)	78	#5	26'-6"	
a427 (E)	168	#6	24'-0"	
a439 (E)	32	#5	2'-0"	
b410 (E)	545	#5	27'-0"	
b411 (E)	18	#6	31'-8"	
b412 (E)	27	#5	31'-0"	
b413 (E)	54	#5	27'-3"	
b414 (E)	530	#5	27'-0"	
b415 (E)	11	#5	18'-11"	
b416 (E)	32	#5	26'-8"	
b417 (E)	18	#5	31'-3"	
b418 (E)	10	#5	33'-8"	
b419 (E)	24	#5	32'-10"	
b420 (E)	18	#5	32'-0"	
b421 (E)	12	#5	26'-2"	
b422 (E)	62	#5	30'-0"	
b423 (E)	1	#6	28'-3"	
b424 (E)	1	#6	24'-3"	
b425 (E)	1	#6	20'-6"	
b426 (E)	1	#6	17'-6"	
b427 (E)	14	#6	21'-10"	
c410 (E)	40	#5	5'-10"	
c411 (E)	40	#5	2'-4"	
d410 (E)	454	#5	7'-8"	
d411 (E)	454	#5	6'-10"	
d412 (E)	40	#4	4'-10"	
d413 (E)	40	#6	3'-9"	
d414 (E)	10	#4	2'-0"	
e410 (E)	12	#5	19'-0"	
e411 (E)	1	#8	11'-10"	
e412 (E)	8	#5	11'-10"	
e413 (E)	1	#8	16'-10"	
e414 (E)	8	#5	16'-10"	
e415 (E)	1	#8	15'-2"	
e416 (E)	8	#5	15'-2"	
e417 (E)	6	#8	37'-0"	
e418 (E)	30	#5	17'-4"	
e419 (E)	6	#5	33'-0"	
e420 (E)	30	#5	17'-9"	
e421 (E)	6	#5	33'-5"	
e422 (E)	6	#8	37'-6"	
e423 (E)	1	#8	15'-2"	
e424 (E)	8	#5	15'-2"	
e425 (E)	1	#8	16'-10"	
e426 (E)	8	#5	16'-10"	
e427 (E)	8	#5	31'-10"	
e428 (E)	8	#8	35'-11"	
e429 (E)	42	#5	15'-10"	
e430 (E)	1	#8	12'-6"	
e431 (E)	8	#5	12'-6"	
e432 (E)	1	#8	23'-5"	
e433 (E)	8	#5	23'-5"	
x400 (E)	53	#5	4'-2"	
x401 (E)	53	#5	5'-1"	

BILL OF MATERIAL

Reinforcement Bars, Epoxy Coated	LB	125,100
Concrete Superstructure	CU YD	484
Bridge Deck Grooving	SQ YD	1,382
Protective Coat	SQ YD	1,782

CROSS SECTIONS & DETAILS
RAMP 4 FLARE
STRUCTURE NO. 016-0724

TYLIN INTERNATIONAL

DESIGNED	-	JE, PK
CHECKED	-	AMD,
DRAWN	-	EMK
CHECKED	-	AMD,
DATE	-	08/02/10

REVISIONS	
NAME	DATE

SHEET NO. 34
137 SHEETS

F.A.I RTE.	SECTION	COUNTY	TOTAL SHEETS	SHEET NO.
55	0711.2R & 1011.1BR	COOK	200	64

CONTRACT NO. 60L39

FED. ROAD DIST. NO. 1 | ILLINOIS | FED. AID PROJECT

p:\01345\beam and bearing fabrication\55f4decksec.dgn 8/5/2010 2:42:01 PM

STATE OF ILLINOIS
DEPARTMENT OF TRANSPORTATION

(For Ramp 1. Ramp 4 Opposite Hand.)

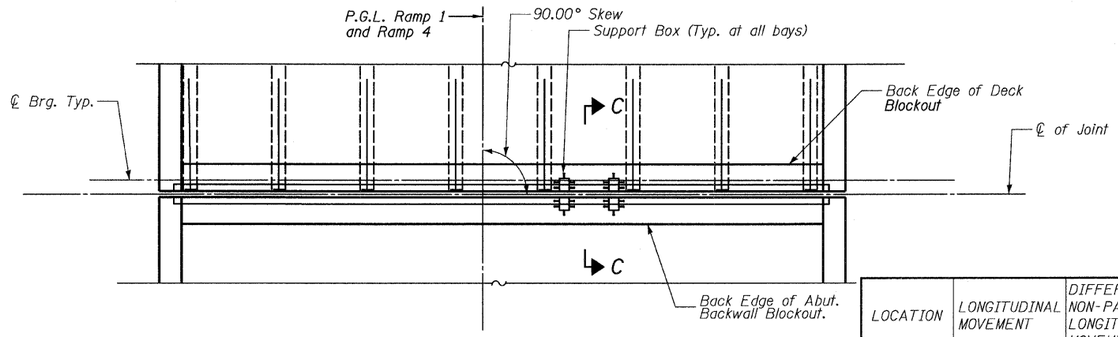

PLAN VIEW RAMP 1

(Ramp 4 Opposite Hand)

LOCATION	LONGITUDINAL MOVEMENT	DIFFERENTIAL NON-PARALLEL LONGITUDINAL MOVEMENT	PARALLEL TRANSVERSE MOVEMENT	SIZE
Ramp 1	±1½"	⅜"	±1"	6"
Ramp 4	±1½"	⅜"	±1"	6"

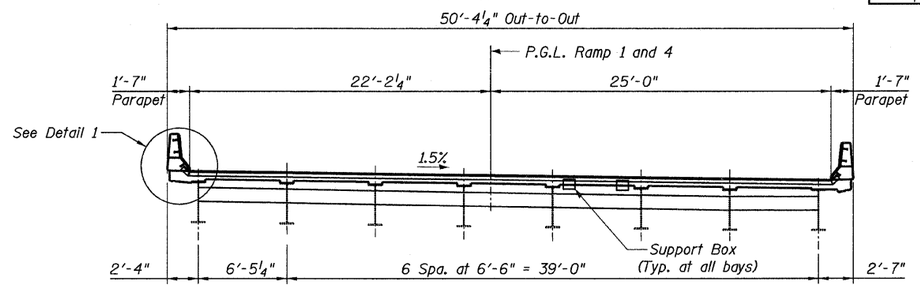

CROSS SECTION

(Looking Upstation Ramp 1
Looking Downstation Ramp 4)

GENERAL NOTES

1. The expansion joint device shall be a prefabricated modular assembly with multiple support bars and separator beams, providing a continuous seal across the deck.
2. All splices of center beams and edge beams shall be full penetration welds. Upturn splices may be partial penetration welds.
3. Joint shall be fabricated according to the manufacturer's recommendations and as shown in the Special Provisions for Modular Expansion Joint and as approved by the Engineer.
4. Joint openings shall be adjusted according to Article 520.04 of the Standard Specifications when the concrete blockout is cast at an ambient temperature other than 50° F.
5. Joint shall be fabricated to conform to the roadway profile and cross slope.
6. The cost of furnishing all material for the sliding plate assemblies at the parapets and median barrier shall be included with Furnishing Modular Expansion Joints. The sliding plate assembly shall be galvanized.
7. Countersunk bolts and concrete inserts shall be Hot-Dipped Galvanized according to AASHTO M232.
8. Barrier plates to be AASHTO M270, Grade 36 and to be Hot-Dipped Galvanized according to AASHTO M111 after fabrication.
9. ¾" x 6" studs shall be according to Article 1006.32 of the Standard Specifications.
10. All anchor studs shall be included with Furnishing Modular Expansion Joint (unless noted otherwise).
11. Modular expansion joint shall be assembled in their final relative position with the ends in place for shop inspection and acceptance.

BILLS OF MATERIAL

LOCATION	ITEM	UNIT	TOTAL
Ramp 1	Furnishing Modular Expansion Joint-Swivel 6"	Foot	47.0
Ramp 4	Furnishing Modular Expansion Joint-Swivel 6"	Foot	47.0

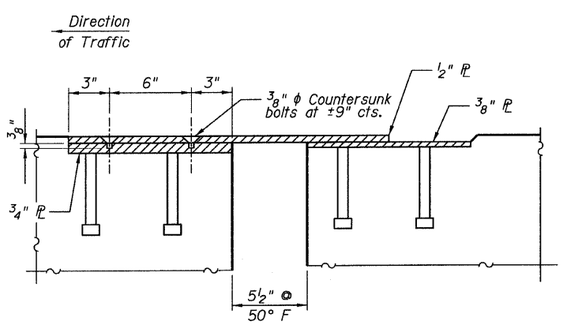

SECTION A-A

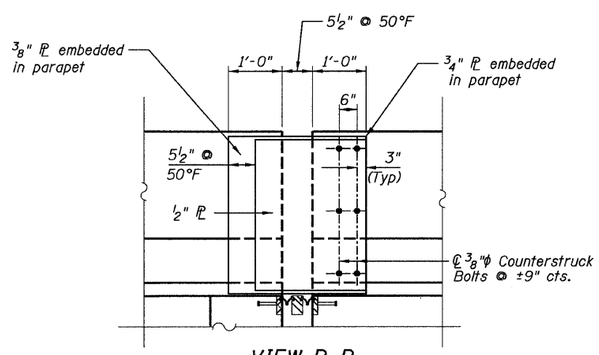

VIEW B-B

Note: Parapet shown. Studs not shown for clarity.

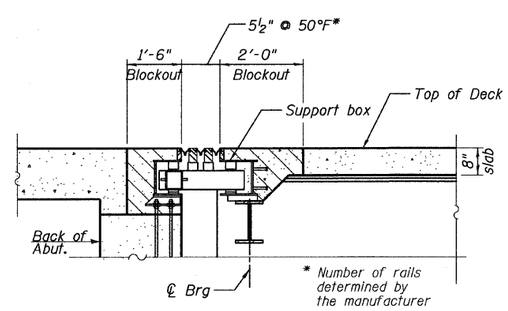

SECTION C-C

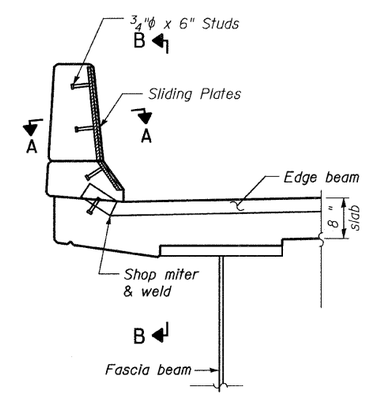

DETAIL 1

RAMPS 1 AND 4 MODULAR EXPANSION JOINT DETAILS AT ABUTMENT STRUCTURE NO. 016-0724

TYLIN INTERNATIONAL

DESIGNED -	MAU
CHECKED -	AMD,
DRAWN -	MRB
CHECKED -	AMD,
DATE -	08/02/10

REVISIONS	
NAME	DATE

SHEET NO. 35
137 SHEETS

F.A.I RTE.	SECTION	COUNTY	TOTAL SHEETS	SHEET NO.
55	0711.2R & 1011.1BR	COOK	200	65
		CONTRACT NO. 60L39		
FED. ROAD DIST. NO. 1	ILLINOIS	FED. AID PROJECT		

p:\01345\beam and bearing fabrication\55-1-4ex1de1.dgn 1:06:53 PM

8/11/2010

STATE OF ILLINOIS
DEPARTMENT OF TRANSPORTATION

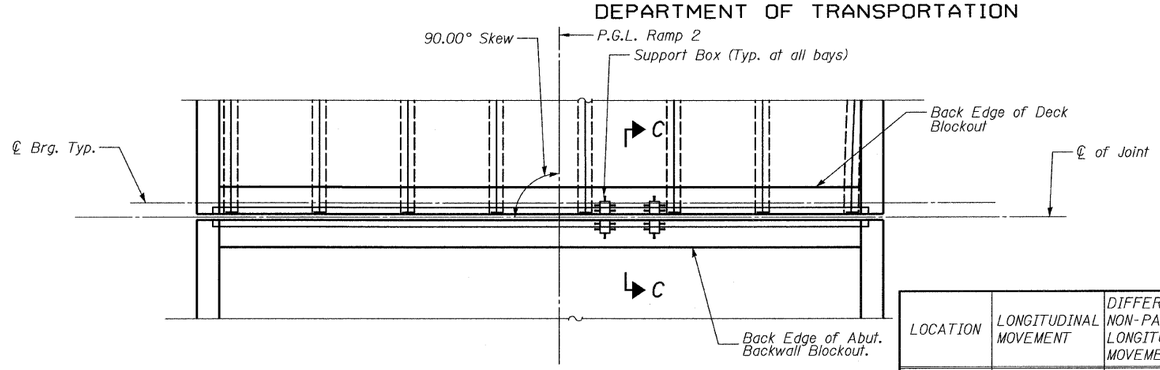

PLAN VIEW RAMP 2

(Ramp 3 opposite hand)

LOCATION	LONGITUDINAL MOVEMENT	DIFFERENTIAL NON-PARALLEL LONGITUDINAL MOVEMENT	PARALLEL TRANSVERSE MOVEMENT	SIZE
Ramp 2	±1"	0"	±1"	6"
Ramp 3	±1"	0"	±1"	6"

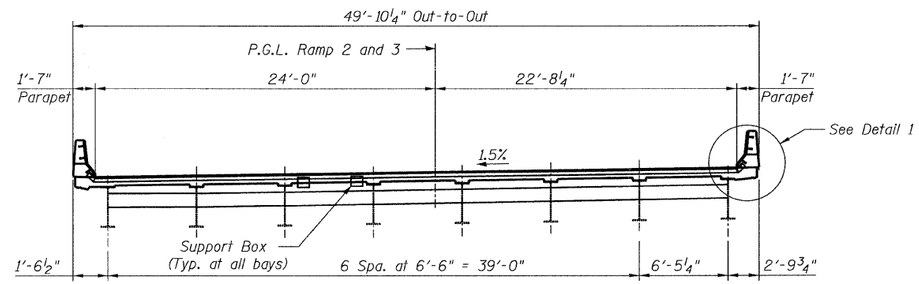

CROSS SECTION

(Looking Upstation - Ramp 2)
(Looking Downstation - Ramp 3)

GENERAL NOTES

1. The expansion joint device shall be a prefabricated modular assembly with multiple support bars and separator beams, providing a continuous seal across the deck.
2. All splices of center beams and edge beams shall be full penetration welds. Upturn splices may be partial penetration welds.
3. Joint shall be fabricated according to the manufacturer's recommendations and as shown in the Special Provisions for Modular Expansion Joint and as approved by the Engineer.
4. Joint openings shall be adjusted according to Article 520.04 of the Standard Specifications when the concrete blockout is cast at an ambient temperature other than 50° F.
5. Joint shall be fabricated to conform to the roadway profile and cross slope.
6. The cost of furnishing all material for the sliding plate assemblies at the parapets and median barrier shall be included with Furnishing Modular Expansion Joints. The sliding plate assembly shall be galvanized.
7. Countersunk bolts and concrete inserts shall be Hot-Dipped Galvanized according to AASHTO M232.
8. Barrier plates to be AASHTO M270, Grade 36 and to be Hot-Dipped Galvanized according to AASHTO M111 after fabrication.
9. ¾" x 6" studs shall be according to Article 1006.32 of the Standard Specifications.
10. All anchor studs shall be included with Furnishing Modular Expansion Joint (unless noted otherwise).
11. Modular expansion joint shall be assembled in their final relative position with the ends in place for shop inspection and acceptance.

BILLS OF MATERIAL

LOCATION	ITEM	UNIT	TOTAL
Ramp 2	Furnishing Modular Expansion Joint-Swivel 6"	Foot	46.0
Ramp 3	Furnishing Modular Expansion Joint-Swivel 6"	Foot	46.0

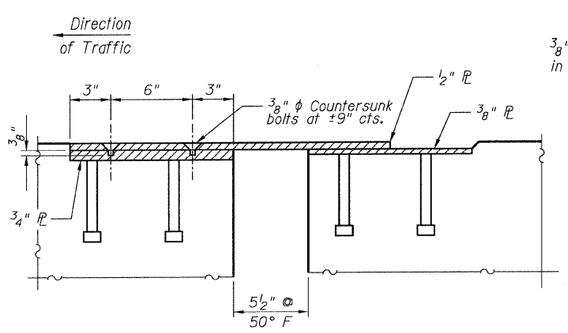

SECTION A-A

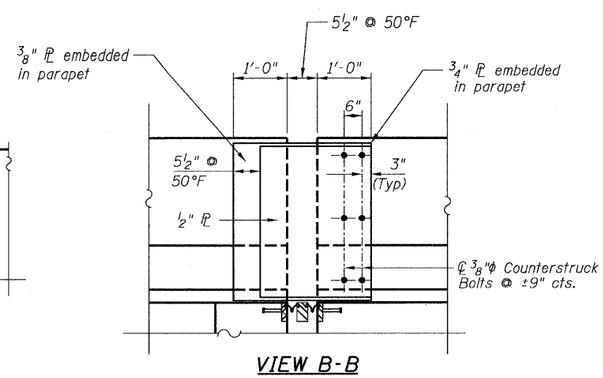

VIEW B-B

Note: Parapet shown. Studs not shown for clarity.

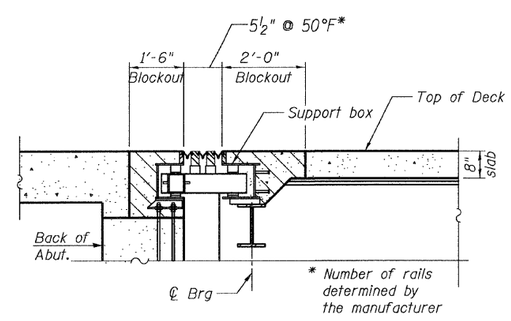

SECTION C-C

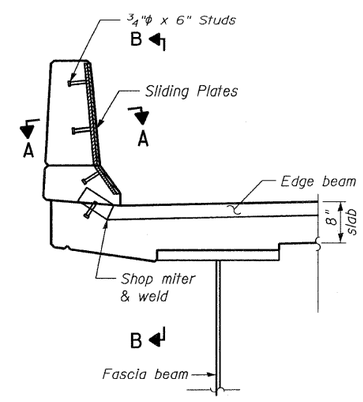

DETAIL 1

RAMPS 2 & 3 MODULAR EXPANSION JOINT DETAILS AT ABUTMENT STRUCTURE NO. 016-0724

TYLIN INTERNATIONAL

DESIGNED	MAU
CHECKED	AMD,
DRAWN	MRB
CHECKED	AMD,
DATE	08/02/10

REVISIONS	
NAME	DATE

SHEET NO. 36
137 SHEETS

F.A.I RTE.	SECTION	COUNTY	TOTAL SHEETS	SHEET NO.
55	0711.2R & 1011.1BR	COOK	200	66
		CONTRACT NO. 60L39		
FED. ROAD DIST. NO. 1	ILLINOIS	FED. AID PROJECT		

8/11/2010

p:\01345\beam and bearing fabrication\55-2ex1det.dgn 1:05:54 PM

STATE OF ILLINOIS
DEPARTMENT OF TRANSPORTATION

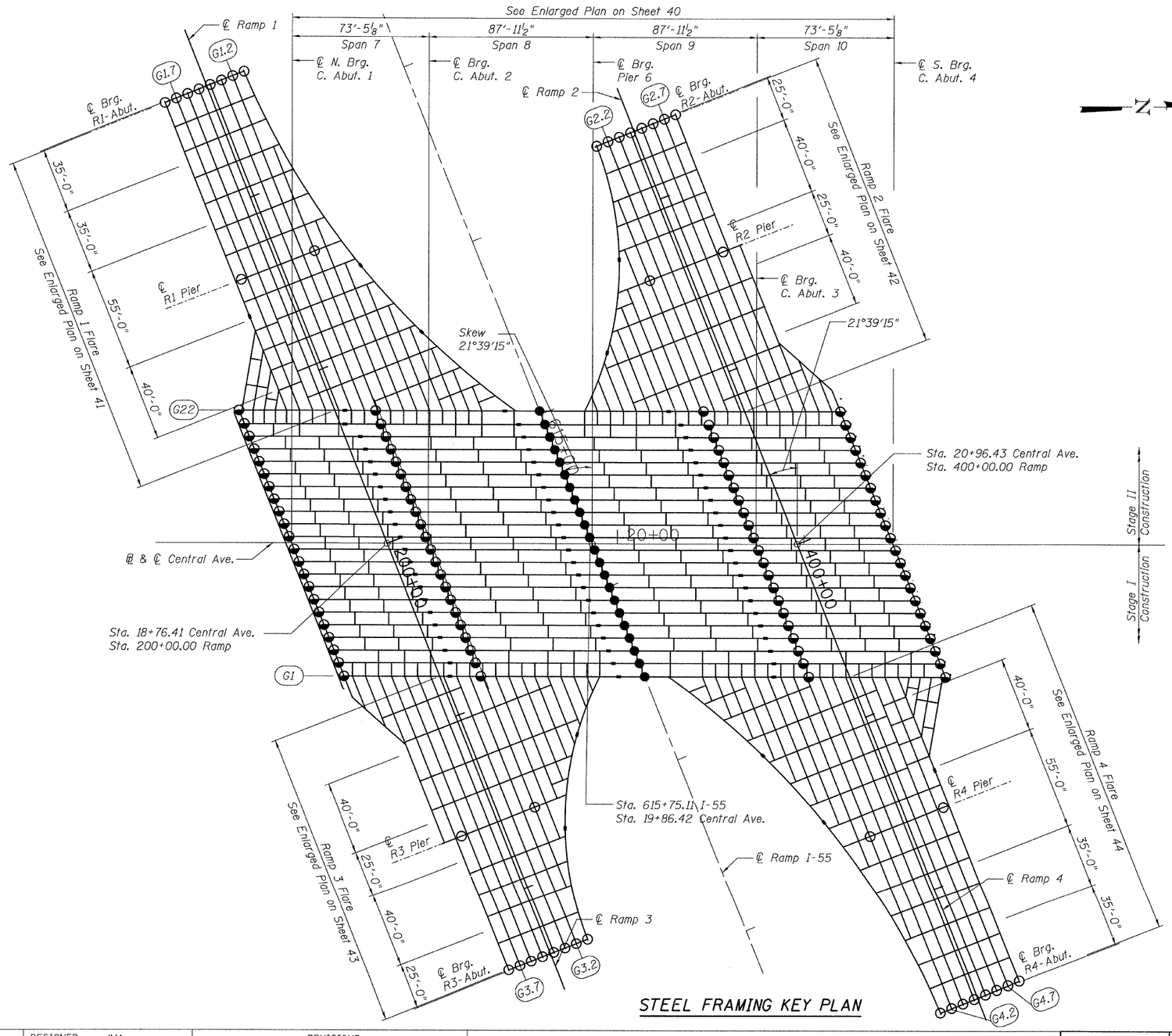

STEEL FRAMING KEY PLAN

LEGEND:

- Guided Bearing
- Non-Guided Bearing
- Fixed Bearing

NOTES:

1. For Steel Fabrication and Shop Assembly Requirements, refer to the General Notes.

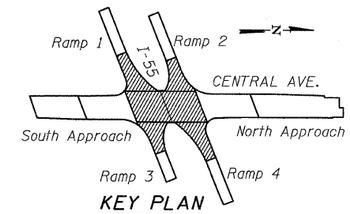

KEY PLAN

FRAMING KEY PLAN
LAYOUT
CENTRAL / I-55
STRUCTURE NO. 016-0724

T·Y·LIN INTERNATIONAL

		REVISIONS	
DESIGNED	- JMA	NAME	DATE
CHECKED	- AMD.		
DRAWN	- JMA		
CHECKED	- AMD.		
DATE	- 08/02/10		

SHEET NO. 37
137 SHEETS

F.A.I RTE.	SECTION	COUNTY	TOTAL SHEETS	SHEET NO.
55	0711.2R & 1011.1BR	COOK	200	67
		CONTRACT NO. 60L39		
FED. ROAD DIST. NO. 1	ILLINOIS	FED. AID PROJECT		

8/5/2010

p:\01345\beam and bearing fabrication\55c2frameke.dgn 2:42:05 PM

STATE OF ILLINOIS
DEPARTMENT OF TRANSPORTATION

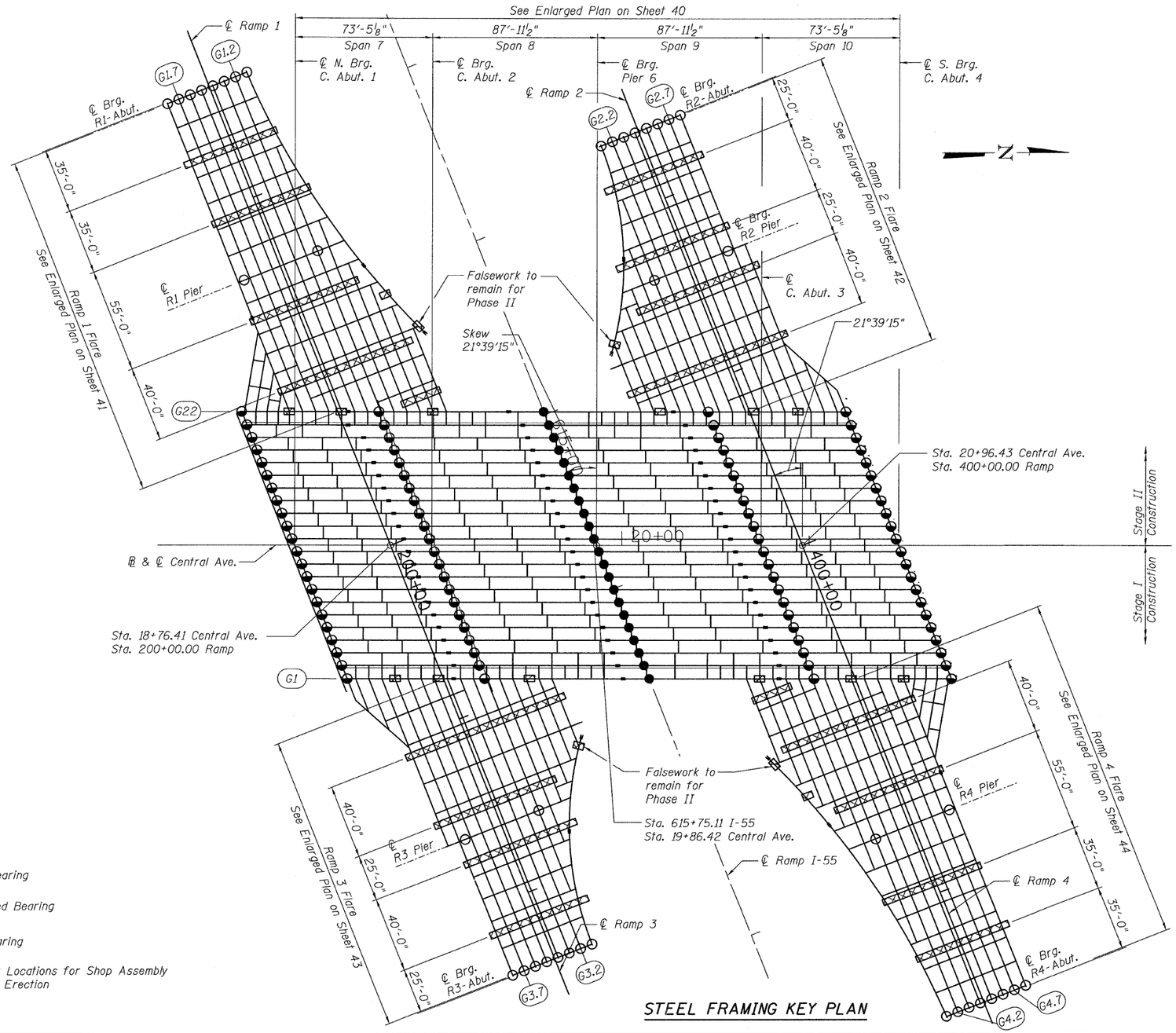

STEEL FRAMING KEY PLAN

STEEL ERECTION SEQUENCE

RAMP 3 PHASE I	MOT STAGE 1
RAMP 3 PHASE II	MOT STAGE 1A
RAMP 4 PHASE I	MOT STAGE 2
RAMP 4 PHASE II	MOT STAGE 2A
RAMP 1 PHASE I	MOT STAGE 3
RAMP 1 PHASE II	MOT STAGE 3A
RAMP 2 PHASE I	MOT STAGE 4
RAMP 2 PHASE II	MOT STAGE 4A

NOTES:

1. For Steel Fabrication and Shop Assembly Requirements, refer to the General Notes & Special Provisions.
2. Coordinate steel erection and shoring with MOT plans. Phase 1 shoring is for erection of outside ramp beams/girders as shown. Remove all falsework except as indicated for Phase II traffic shift.

LEGEND:

- Guided Bearing
- Non-Guided Bearing
- Fixed Bearing
- Falsework Locations for Shop Assembly and Steel Erection

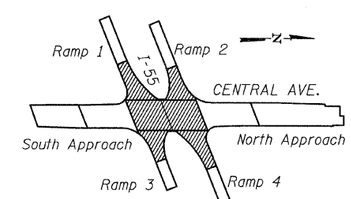

KEY PLAN

PHASE I SHORING PLAN LAYOUT
CENTRAL / I-55
STRUCTURE NO. 016-0724

TYLIN INTERNATIONAL

DESIGNED	- JMA	REVISIONS	
CHECKED	- AMD,	NAME	DATE
DRAWN	- JMA		
CHECKED	- AMD,		
DATE	- 08/02/10		

SHEET NO. 38
137 SHEETS

F.A.I RTE.	SECTION	COUNTY	TOTAL SHEETS	SHEET NO.
55	0711.2R & 1011.1BR	COOK	200	68
		CONTRACT NO. 60L39		
FED. ROAD DIST. NO. 1	ILLINOIS	FED. AID PROJECT		

8/13/2010

4:32:47 PM

c:\01345\beam and bearing fabrication\55c2framestal.dgn

\55c2framestal.dgn 8/13/2010 4:35:27 PM

STATE OF ILLINOIS
DEPARTMENT OF TRANSPORTATION

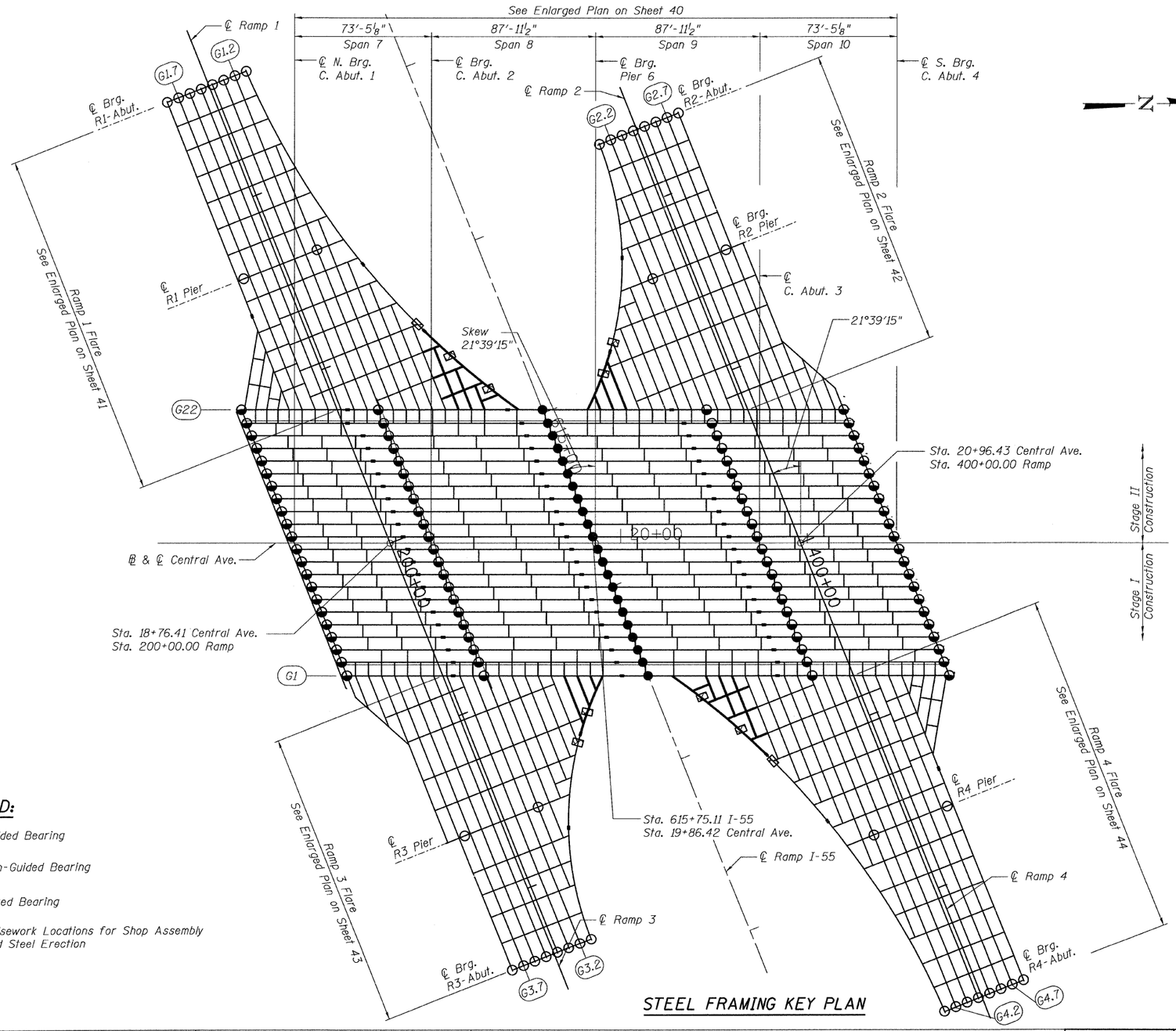

STEEL FRAMING KEY PLAN

STEEL ERECTION SEQUENCE

RAMP 3 PHASE I	MOT STAGE 1
RAMP 3 PHASE II	MOT STAGE 1A
RAMP 4 PHASE I	MOT STAGE 2
RAMP 4 PHASE II	MOT STAGE 2A
RAMP 1 PHASE I	MOT STAGE 3
RAMP 1 PHASE II	MOT STAGE 3A
RAMP 2 PHASE I	MOT STAGE 4
RAMP 2 PHASE II	MOT STAGE 4A

NOTES:

1. For Steel Fabrication and Shop Assembly Requirements, refer to the General Notes & Special Provisions.
2. Coordinate steel erection and shoring with MOT plans. Phase 1 shoring is for erection of outside ramp beams/girders as shown. Remove all falsework except as indicated for Phase II traffic shift.

LEGEND:

- Guided Bearing
- Non-Guided Bearing
- Fixed Bearing
- Falsework Locations for Shop Assembly and Steel Erection

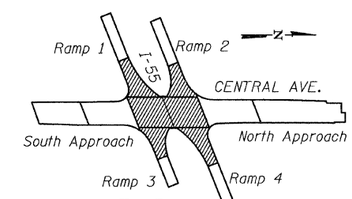

KEY PLAN

PHASE II SHORING PLAN LAYOUT
CENTRAL / I-55
STRUCTURE NO. 016-0724

T·Y·LIN INTERNATIONAL

DESIGNED	- JMA	REVISIONS	
CHECKED	- AMD,	NAME	DATE
DRAWN	- JMA		
CHECKED	- AMD,		
DATE	- 08/02/10		

SHEET NO. 39
137 SHEETS

F.A.I RTE.	SECTION	COUNTY	TOTAL SHEETS	SHEET NO.
55	0711.2R & 1011.1BR	COOK	200	69
		CONTRACT NO. 60L39		
FED. ROAD DIST. NO. 1	ILLINOIS	FED. AID PROJECT		

4:32:47 PM
p:\01345\beam and bearing fabrication\55c2framesta2.dgn
8/13/2010

STATE OF ILLINOIS
DEPARTMENT OF TRANSPORTATION

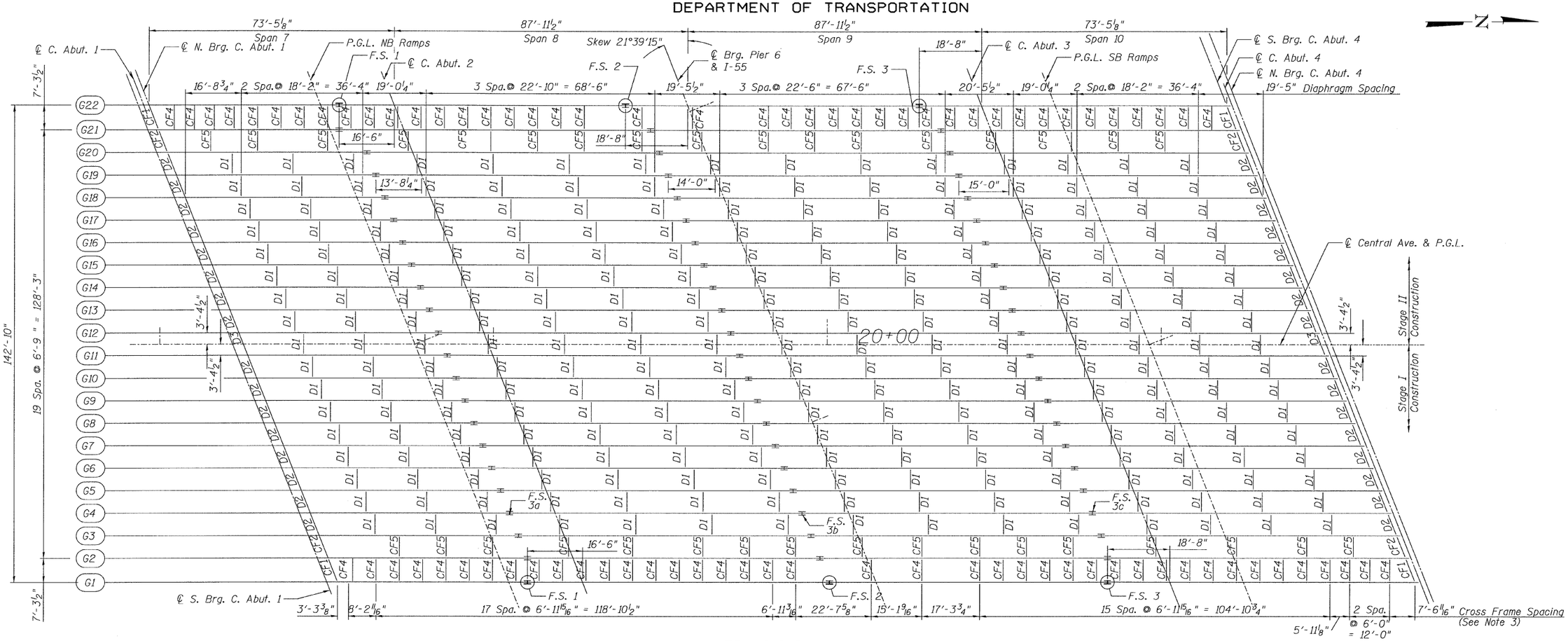

FRAMING PLAN

NOTES:

1. Structural Steel for Girders, Splice Plates, and Bearing Plates shall confirm to the requirements of AASHTO M 270 Grade 50.
   All other steel shall confirm to the requirements of AASHTO M 270 Grade 36.
2. Work this sheet with sheets 46 thru 54.
3. Cross Frame spacing on G22 is same as G1, opposite hand.

TOP OF BEAM ELEVATIONS*

	℄ N. Brg. C. Abut. 1	Field Splice 3a	℄ Brg. C. Abut. 2	Field Splice 3b	℄ Brg. Pier 6	Field Splice 3c	℄ Brg. C. Abut. 3	℄ S. Brg. C. Abut. 4
G3	626.27	627.15	627.29	628.05	628.11	628.43	628.50	628.84
G4	626.36	627.25	627.39	628.16	628.22	628.55	628.62	628.96
G5	626.44	627.34	627.49	628.28	628.34	628.68	628.75	629.09
G6	626.53	627.44	627.59	628.39	628.46	628.80	628.87	629.21
G7	626.61	627.54	627.69	628.51	628.58	628.93	629.00	629.34
G8	626.68	627.62	627.77	628.61	628.67	629.04	629.11	629.45
G9	626.73	627.68	627.83	628.69	628.76	629.13	629.20	629.54
G10	626.78	627.74	627.90	628.76	628.84	629.22	629.29	629.63
G11	626.82	627.80	627.96	628.84	628.92	629.31	629.38	629.72
G12	626.77	627.76	627.92	628.82	628.90	629.30	629.37	629.71
G13	626.62	627.61	627.78	628.70	628.77	629.19	629.26	629.60
G14	626.46	627.47	627.64	628.57	628.65	629.08	629.15	629.49
G15	626.30	627.33	627.50	628.44	628.53	628.97	629.04	629.38
G16	626.13	627.16	627.34	628.30	628.39	628.84	628.91	629.25
G17	625.94	626.98	627.16	628.14	628.23	628.70	628.76	629.11
G18	625.74	626.80	626.99	627.98	628.07	628.55	628.62	628.96
G19	625.55	626.62	626.81	627.82	627.91	628.41	628.48	628.82
G20	625.36	626.44	626.63	627.65	627.75	628.26	628.33	628.67

TOP OF WEB ELEVATIONS*

	℄ N. Brg. C. Abut. 1	Field Splice 1	℄ Brg. C. Abut. 2	Field Splice 2	℄ Brg. Pier 6	Field Splice 3	℄ Brg. C. Abut. 3	℄ S. Brg. C. Abut. 4
G1	625.89	626.69	626.85	627.58	627.64	627.94	628.02	628.37
G2	626.07	626.96	627.09	627.83	627.90	628.21	628.28	628.60
G21	625.05	626.07	626.35	627.31	627.48	628.00	628.09	628.41
G22	624.74	625.80	626.04	627.04	627.19	627.72	627.81	628.16

* For Fabrication only

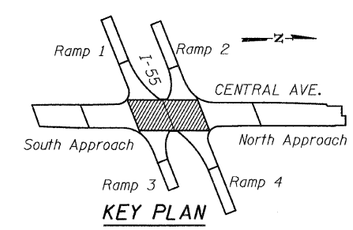

KEY PLAN

FRAMING PLAN
CENTRAL/I-55
STRUCTURE NO. 016-0724

T·Y·LIN INTERNATIONAL

DESIGNED	- JMA	REVISIONS	
CHECKED	- AMD,	NAME	DATE
DRAWN	- JMA		
CHECKED	- AMD,		
DATE	- 08/02/10		

SHEET NO. 40
137 SHEETS

F.A.I RTE.	SECTION	COUNTY	TOTAL SHEETS	SHEET NO.
55	0711.2R & 1011.1BR	COOK	200	70
		CONTRACT NO. 60L39		
FED. ROAD DIST. NO. 1	ILLINOIS	FED. AID PROJECT		

8/13/2010

p:\01345\beam and bearing fabrication\55c2frame.dgn

4:32:48 PM

STATE OF ILLINOIS
DEPARTMENT OF TRANSPORTATION

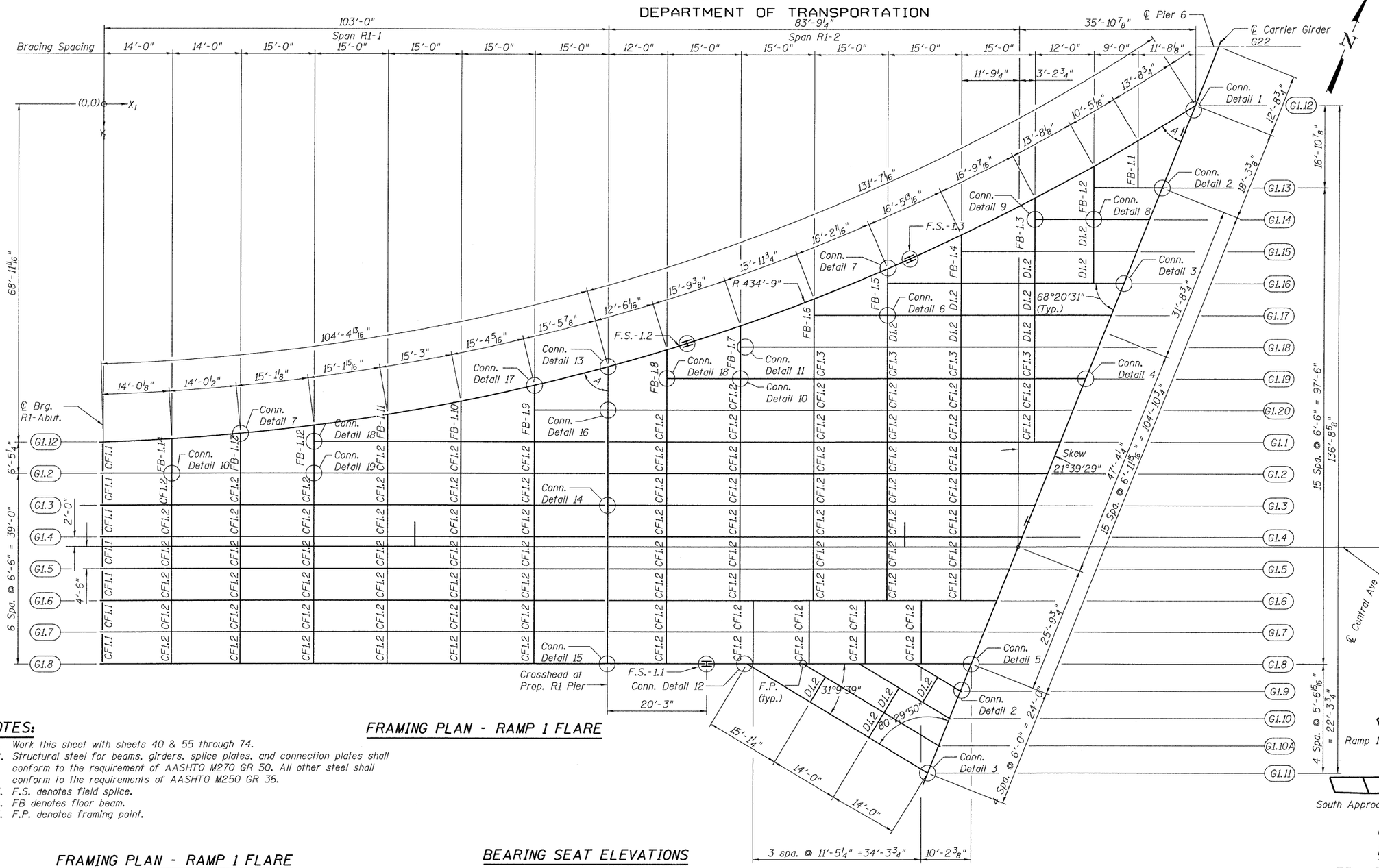

MEMBER SIZE

Girder	Size
G1.1-G1.7	54" ℙ Girder
G1.8	60" ℙ Girder
G1.9	W36x150
G1.10	W36x150
G1.10A	W36x150
G1.11	W36x231
G1.12	60" ℙ Girder
G1.13	W36x150
G1.14	W36x150
G1.15	W36x150
G1.16	W36x231
G1.17	W36x231
G1.18	W36x231
G1.19	54" ℙ Girder
G1.20	54" ℙ Girder
FB1.1-FB1.7	W36x231
FB1.8, FB1.9, FB1.12	54" ℙ Girder
FB1.10, FB1.11, FB1.13, FB1.14	W36x231

ANGLE "A"

Girder	Angle "A"
Carrier Girder	35°34'48"
FB-1.1	59°3'0"
FB-1.2	60°25'24"
FB-1.3	62°13'34"
FB-1.4	64°26'18"
FB-1.5	66°36'38"
FB-1.6	68°44'51"
FB-1.7	70°51'15"
FB-1.8	72°56'3"
Crosshead	74°34'53"
FB-1.9	76°37'21"
FB-1.10	78°38'47"
FB-1.11	80°39'21"
FB-1.12	82°39'15"
FB-1.13	84°38'36"
FB-1.14	86°29'38"

NOTES:

1. Work this sheet with sheets 40 & 55 through 74.
2. Structural steel for beams, girders, splice plates, and connection plates shall conform to the requirement of AASHTO M270 GR 50. All other steel shall conform to the requirements of AASHTO M250 GR 36.
3. F.S. denotes field splice.
4. FB denotes floor beam.
5. F.P. denotes framing point.

FRAMING PLAN - RAMP 1 FLARE

FRAMING PLAN - RAMP 1 FLARE

	℄ Carrier Girder G22	℄ F.S.-1.2	℄ Crosshead	℄ Brg. R1-Abut.
X_1	222'-8⅛"	119'-1 11/16"	102'-11 15/16"	0'-0"
Y_1	0'-0"	48'-8 7/16"	53'-6⅛"	68'-11 11/16"

BEARING SEAT ELEVATIONS

Location \ Girder	G1.12	G1.2	G1.3	G1.4	G1.5	G1.6	G1.7	G1.8
R1-Abut.	616.33	616.94	617.04	617.14	617.24	617.34	617.44	616.75

(For Information Only)

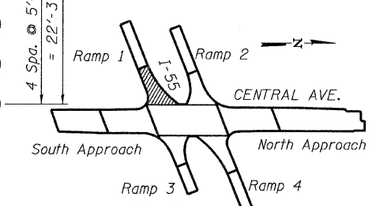

KEY PLAN

FRAMING PLAN
RAMP 1 FLARE
STRUCTURE NO. 016-0724

T·Y·LIN INTERNATIONAL

DESIGNED	PK
CHECKED	AMD.
DRAWN	PK
CHECKED	AMD.
DATE	08/02/10

REVISIONS	
NAME	DATE

SHEET NO. 41
137 SHEETS

F.A.I RTE.	SECTION	COUNTY	TOTAL SHEETS	SHEET NO.
55	0711.2R & 1011.1BR	COOK	200	71
		CONTRACT NO. 60L39		
FED. ROAD DIST. NO. 1	ILLINOIS	FED. AID PROJECT		

8/13/2010

p:\01345\beam and bearing fabrication\55f1frame.dgn 4:32:49 PM

STATE OF ILLINOIS
DEPARTMENT OF TRANSPORTATION

NOTES:

1. Work this sheet with sheets 40 & 75 through 93.
2. Structural steel for beams, girders, splice plates, and connection plates shall conform to the requirement of AASHTO M270 GR 50. All other steel shall conform to the requirements of AASHTO M270 GR 36.
3. F.S. denotes field splice.
4. FB denotes floor beam.

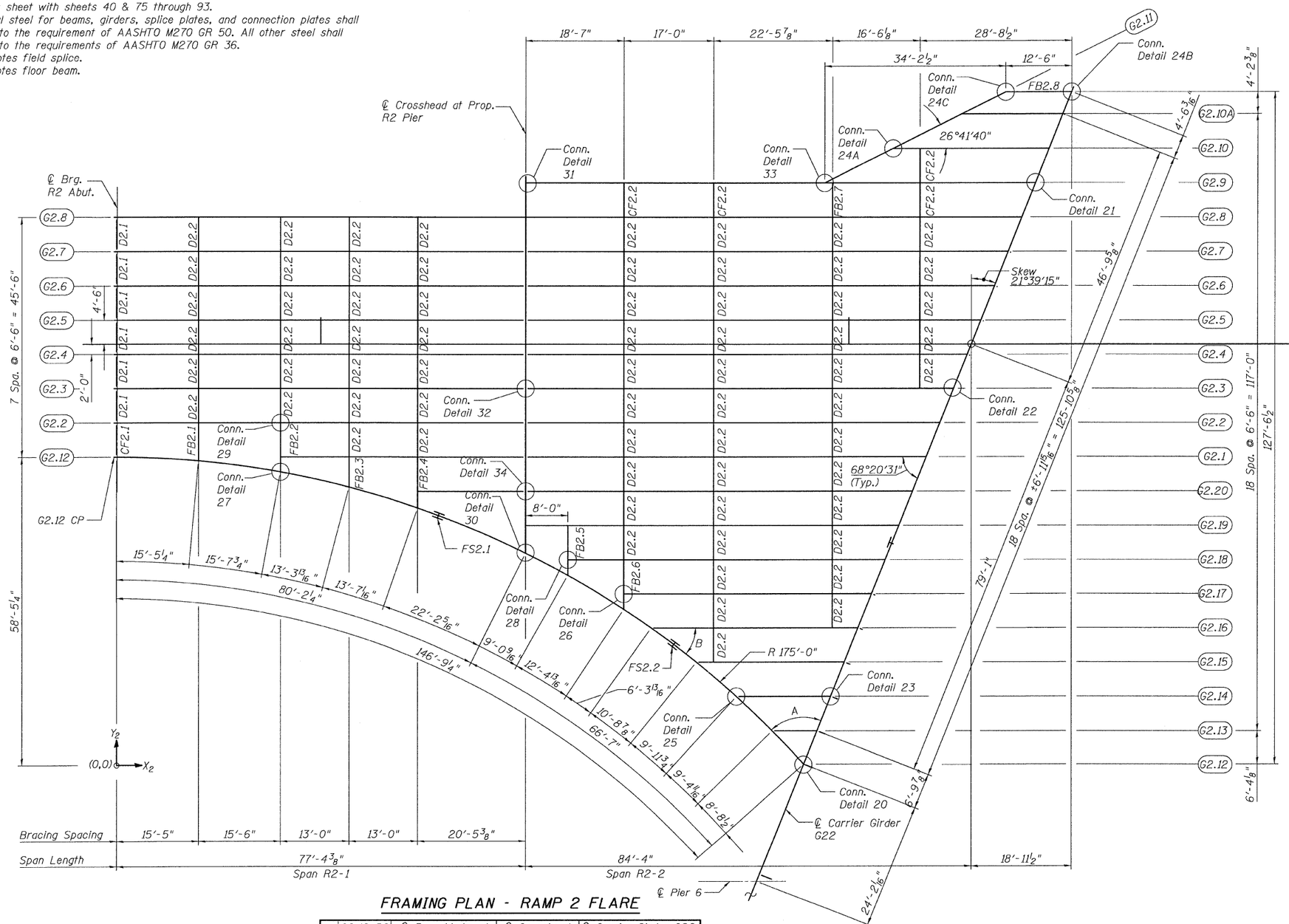

FRAMING PLAN - RAMP 2 FLARE

	G2.12 PC	℄ Brg. Abutment	℄ Crosshead	℄ Carrier Girder G22
X_2	-6 5/16"	0'-0"	77'-4⅜"	130'-0 5/16"
Y_2	58'-5"	58'-5"	40'-2⅜"	0'-0"

ANGLE "A"

Girder	A
Carrier Girder	63°25'14"
FB-2.6	56°35'41"
FB-2.5	60°39'14"
Crosshead	63°36'30"
FB-2.4	70°52'53"
FB-2.3	75°19'51"
FB-2.2	79°41'29"
FB-2.1	84°48'52"

ANGLE "B"

Girder	B
G2.13	45°20'28"
G2.14	42°16'0"
G2.15	38°59'55"
G2.16	35°28'54"

MEMBER SIZE

Girder	Size
G2.1	W36x231
G2.2	↓
G2.3	
G2.4	
G2.5	
G2.6	
G2.7	
G2.8	W36x231
G2.9	54" ℙ Girder
G2.10	W36x150
G2.10A	W36x150
G2.11	W36x231
G2.12	54" ℙ Girder
G2.13	W36x150
G2.14	↓
G2.15	
G2.16	
G2.17	
G2.18	W36x231
G2.19	W36x231
G2.20	W36x231
FB2.1 thru FB2.7	W36x231
FB2.8	W24x76

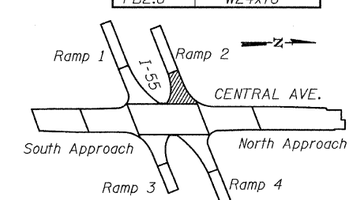

KEY PLAN

FRAMING PLAN
RAMP 2 FLARE
STRUCTURE NO. 016-0724

T·Y·LIN INTERNATIONAL

DESIGNED -	MU, JA
CHECKED -	AMD,
DRAWN -	MU, JA
CHECKED -	AMD,
DATE -	08/02/10

REVISIONS	
NAME	DATE

SHEET NO. 42
137 SHEETS

F.A.I RTE.	SECTION	COUNTY	TOTAL SHEETS	SHEET NO.
55	0711.2R & 1011.1BR	COOK	200	72
		CONTRACT NO. 60L39		
FED. ROAD DIST. NO. 1	ILLINOIS	FED. AID PROJECT		

8/13/2010

p:\01345\beam and bearing fabrication\155f2frame.dgn

4:32:49 PM

STATE OF ILLINOIS
DEPARTMENT OF TRANSPORTATION

FRAMING PLAN - RAMP 3 FLARE

	G3.12 PC	℄ Brg. Abutment	℄ Crosshead	℄ Carrier Girder G1
X_3	-6 15/16"	0'-0"	77'-4 3/8"	130'-0 5/16"
Y_3	58'-5"	58'-5"	40'-2 3/8"	0'-0"

NOTES:

1. Work this sheet with sheet 40 & sheets 94 thru 112.
2. Structural steel for beams, girders, splice plates, and connection plates shall conform to the requirement of AASHTO M270 GR 50. All other steel shall conform to the requirements of AASHTO M250 GR 36.
3. F.S. denotes field splice.
4. FB denotes floor beam.

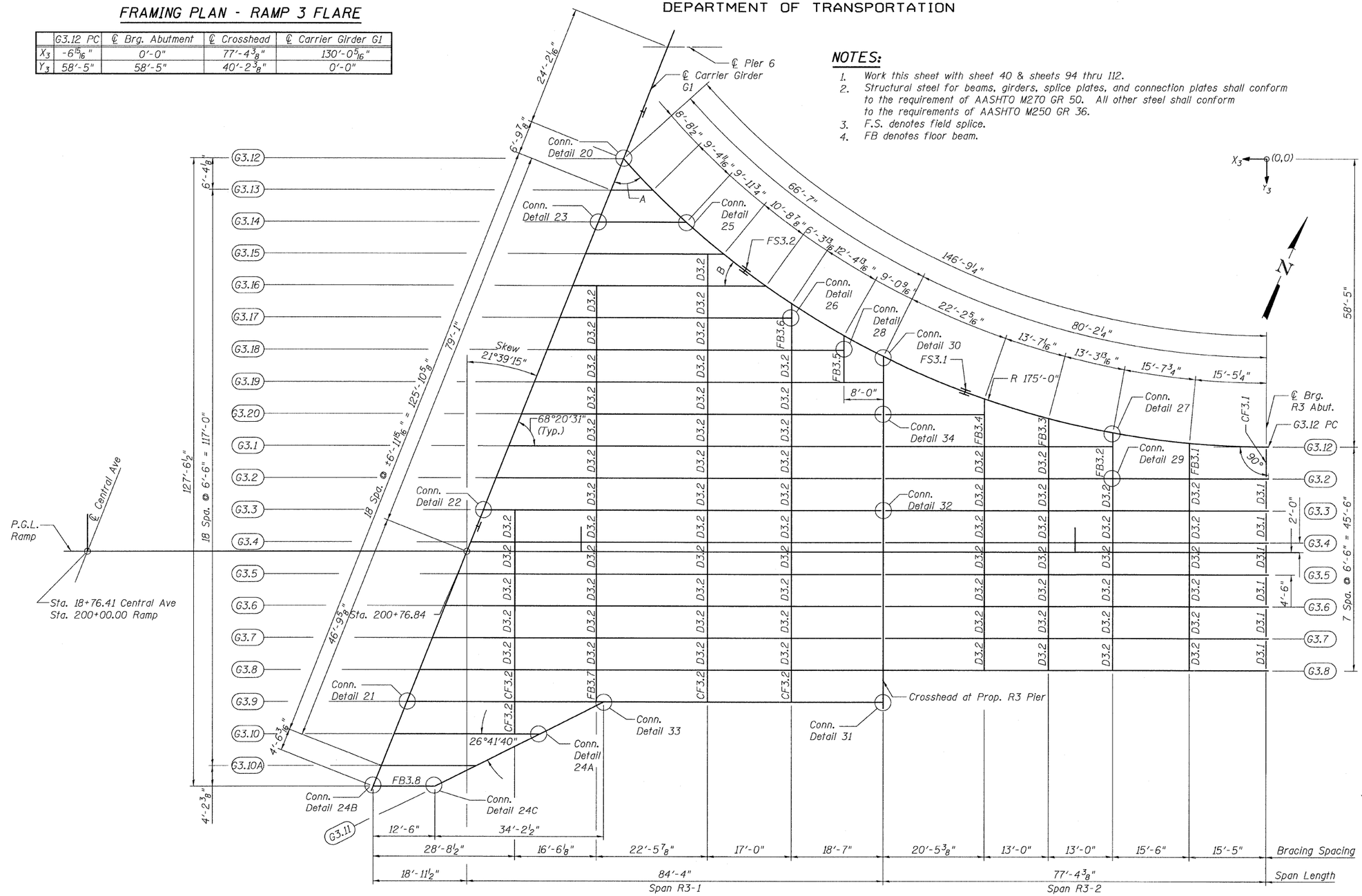

MEMBER SIZE

Girder	Size
G3.1	W36x231
G3.2	↓
G3.3	↓
G3.4	↓
G3.5	↓
G3.6	↓
G3.7	↓
G3.8	W36x231
G3.9	54" ℙ Girder
G3.10	W36x150
G3.10A	W36x150
G3.11	W36x231
G3.12	54" ℙ Girder
G3.13	W36x150
G3.14	↓
G3.15	↓
G3.16	↓
G3.17	↓
G3.18	W36x231
G3.19	W36x231
G3.20	W36x231
FB3.1 thru FB3.7	W36x231
FB3.8	W24x76

ANGLE "A"

Girder	A
Carrier Girder	63°25'14"
FB-3.6	56°35'41"
FB-3.5	60°39'14"
Crosshead	63°36'30"
FB-3.4	70°52'53"
FB-3.3	75°19'51"
FB-3.2	79°41'29"
FB-3.1	84°48'52"

ANGLE "B"

Girder	B
G3.13	45°20'28"
G3.14	42°16'0"
G3.15	38°59'55"
G3.16	35°28'54"

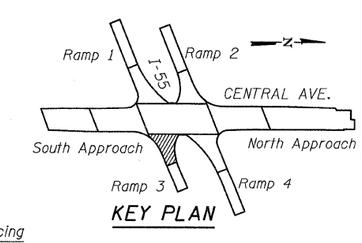

KEY PLAN

FRAMING PLAN
RAMP 3 FLARE
STRUCTURE NO. 016-0724

TYLIN INTERNATIONAL

DESIGNED	JPN
CHECKED	AMD,
DRAWN	MAU
CHECKED	AMD,
DATE	08/02/10

REVISIONS	
NAME	DATE

SHEET NO. 43
137 SHEETS

F.A.I RTE.	SECTION	COUNTY	TOTAL SHEETS	SHEET NO.
55	0711.2R & 1011.1BR	COOK	200	73
		CONTRACT NO. 60L39		
FED. ROAD DIST. NO. 1	ILLINOIS	FED. AID PROJECT		

8/5/2010

6:24:05 PM

e:\01345\bean and bearing fabrication\I55F3frame.dgn

STATE OF ILLINOIS
DEPARTMENT OF TRANSPORTATION

NOTES:

1. Work this sheet with sheets 40 & 113 through 132.
2. Structural steel for beams, girders, splice plates, and connection plates shall conform to the requirement of AASHTO M270 GR 50. All other steel shall conform to the requirements of AASHTO M270 GR 36.
3. F.S. denotes field splice.
4. FB denotes floor beam.
5. F.P. denotes framing point.

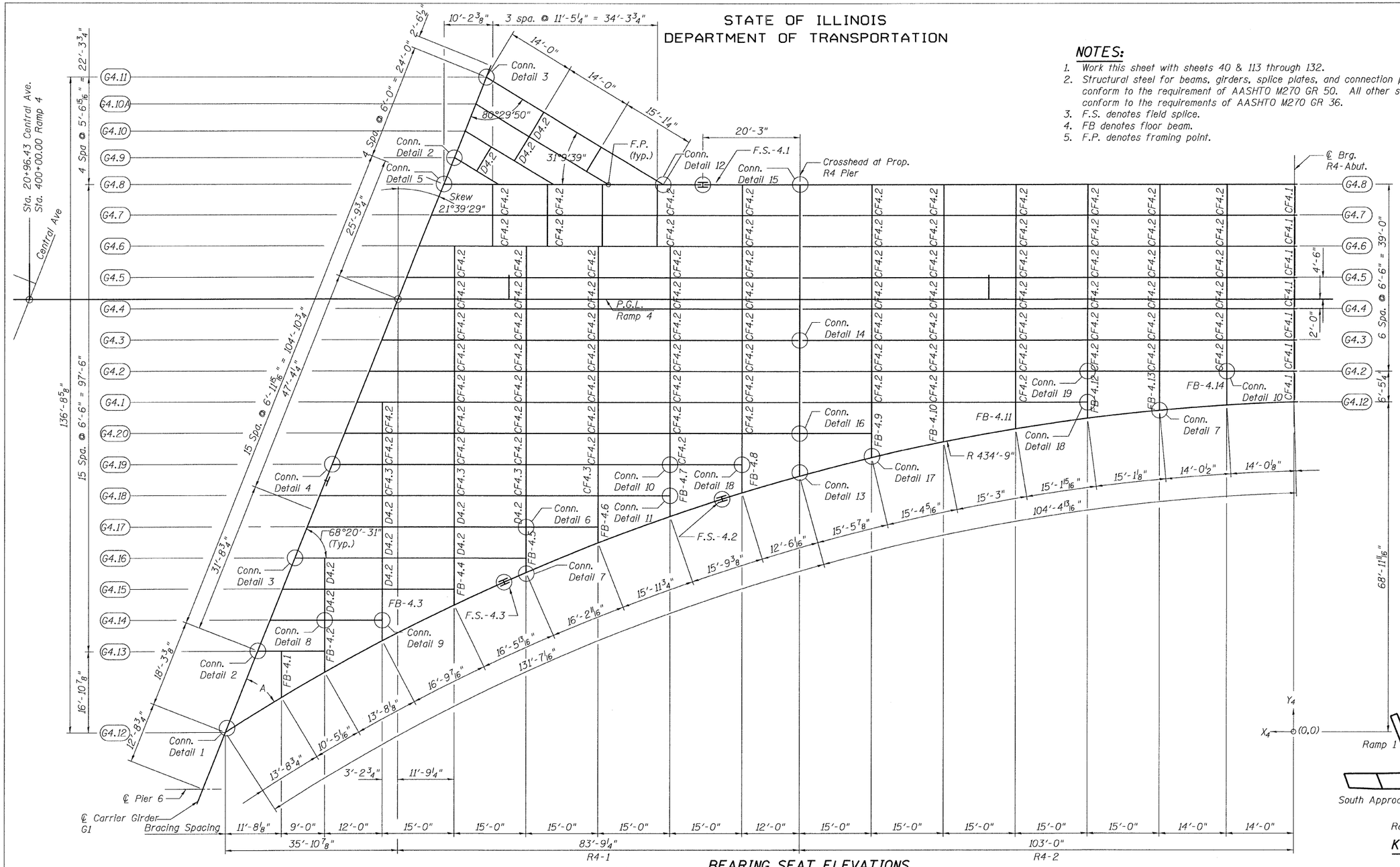

ANGLE "A"

Girder	Angle "A"
Carrier Girder	35°34'48"
FB-4.1	59°3'0"
FB-4.2	60°25'24"
FB-4.3	62°13'34"
FB-4.4	64°26'18"
FB-4.5	66°36'38"
FB-4.6	68°44'51"
FB-4.7	70°51'15"
FB-4.8	72°56'3"
Crosshead	74°34'53"
FB-4.9	76°37'21"
FB-4.10	78°38'47"
FB-4.11	80°39'21"
FB-4.12	82°39'15"
FB-4.13	84°38'36"
FB-4.14	86°29'38"

MEMBER SIZE

Girder	Size
G4.1-G4.7	54" ℙ Girder
G4.8	60" ℙ Girder
G4.9	W36x150
G4.10	W36x150
G4.10A	W36x150
G4.11	W36x231
G4.12	60" ℙ Girder
G4.13	W36x150
G4.14	W36x150
G4.15	W36x150
G4.16	W36x231
G4.17	W36x231
G4.18	W36x231
G4.19	54" ℙ Girder
G4.20	54" ℙ Girder
FB4.1-FB4.7	W36x231
FB4.8, FB4.9, FB4.12	54" ℙ Girder
FB4.10, FB4.11, FB4.13, FB4.14	W36x231

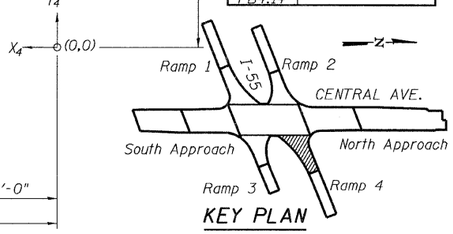

KEY PLAN

FRAMING PLAN - RAMP 4 FLARE

	℄ Carrier Girder G1	℄ F.S.-4.2	℄ Crosshead	℄ Brg. R4-Abut.
X_4	222'-7 1/4"	119'-11 11/16"	102'-11 1/8"	0'-0"
Y_4	0'-0"	48'-8 5/8"	53'-6 1/8"	68'-11 11/16"

BEARING SEAT ELEVATIONS

Girder / Location	G4.8	G4.7	G4.6	G4.5	G4.4	G4.3	G4.2	G4.12
R4-Abut.	619.06	619.74	619.65	619.55	619.45	619.35	619.26	618.64

(For Information Only)

FRAMING PLAN
RAMP 4 FLARE
STRUCTURE NO. 016-0724

TY·LIN INTERNATIONAL

		REVISIONS	
DESIGNED	- PK	NAME	DATE
CHECKED	- AMD,		
DRAWN	- PK		
CHECKED	- AMD,		
DATE	- 08/02/10		

SHEET NO. 44
137 SHEETS

F.A.I RTE.	SECTION	COUNTY	TOTAL SHEETS	SHEET NO.
55	0711.2R & 1011.1BR	COOK	200	74
		CONTRACT NO. 60L39		
FED. ROAD DIST. NO. 1	ILLINOIS	FED. AID PROJECT		

p:\01345\beam and bearing fabrication\155f4frame.dgn 4:32:50 PM 8/13/2010

STATE OF ILLINOIS
DEPARTMENT OF TRANSPORTATION

GIRDER MOMENT TABLE - CENTRAL AVE.

		Fascia Girder G1 and G22 (Note 1)							Interior girder G2 and 21						
		0.4 Sp.7	C. Abt 2	0.5 Sp.8	Pier 6	0.5 Sp.9	C. Abt 3	0.6 Sp.10	0.4 Sp.7	C. Abt 2	0.5 Sp.8	Pier 6	0.5 Sp.9	C. Abt 3	0.6 Sp.10
Is	(in^4)	128965	179592	179592	179592	179592	179592	128965	83898	83898	83898	83898	83898	83898	83898
Ic (n)	(in^4)	209125	-	268800	-	268800	-	209125	152934	-	152934	-	152934	-	152934
Ic (3n)	(in^4)	163380	-	216353	-	216353	-	163380	116348	-	116348	-	116348	-	116348
Ss	(in^3)	3474	4742	4742	4742	4742	4742	3474	2283	2283	2283	2283	2283	2283	2283
Sc (n)	(in^3)	4103	-	5385	-	5385	-	4103	2801	-	2801	-	2801	-	2801
Sc (3n)	(in^3)	3793	-	5050	-	5050	-	3793	2577	-	2577	-	2577	-	2577
Z	(in^3)	-	-	-	-	-	-	-	-	-	-	-	-	-	-
wD	(k/')	6.49	8.26	3.75	4.63	3.26	7.25	5.31	1.08	1.43	1.08	1.43	1.08	1.43	1.08
MD	('k)	2486.8	5444.7	1192.0	2942.8	1036.1	4780.4	2033.1	416.7	921.1	351.2	894.7	351.2	921.1	416.7
sD	(k/')	2.66	-	1.64	-	1.31	-	2.26	0.35	-	0.35	-	0.35	-	0.35
MsD	('k)	1020.3	-	522.5	-	417.2	-	863.8	140.6	-	124.6	-	124.6	-	140.6
ML	('k)	944.5	621.8	943.5	625.7	943.5	621.7	944.5	554.8	68.3	560.6	66.7	560.6	68.3	554.8
M (IM)	('k)	238.0	151.2	221.6	147.0	221.6	151.2	238.0	139.8	16.6	131.6	15.7	131.6	16.6	139.8
$\frac{5}{3}$[ML+I]	('k)	1970.8	1288.3	1941.8	1287.8	1941.8	1288.2	1970.8	1157.7	141.5	1153.8	137.3	1153.8	141.5	1157.7
Ma	('k)	7121.3	8752.9	4753.2	5499.8	4413.7	7889.1	6328.1	2229.5	1381.4	2118.4	1341.6	2118.4	1381.4	2229.5
* Mu	('k)	18145.3	-	22060.0	-	22060.0	-	18145.3	13987.1	-	13987.1	-	13987.1	-	13987.1
fsD non-comp	(ksi)	8.6	13.8	3.0	7.4	2.6	12.1	7.0	2.2	4.8	1.8	4.7	1.8	4.8	2.2
fsD (comp)	(ksi)	3.2	-	1.2	-	1.0	-	2.7	0.7	-	0.6	-	0.6	-	0.7
fs$\frac{5}{3}$(ML+MI)	(ksi)	5.8	3.3	4.3	3.3	4.3	3.3	5.8	5.0	0.7	4.9	0.7	4.9	0.7	5.0
fs (Overload)	(ksi)	17.6	17.0	8.6	10.7	7.9	15.4	15.5	7.8	5.6	7.4	5.4	7.4	5.6	7.8
** fs (Total)	(ksi)	-	22.2	-	13.9	-	20.0	-	-	7.3	-	7.1	-	7.3	-
VR	(k)	90.3	-	79.0	-	79.0	-	90.3	24.8	-	22.7	-	22.7	-	24.8

Note 1: Moments for G22 are opposite hand.

		Girder G3 thru G20			
		0.4 Sp.7 & 0.6 Sp.10	C. Abt 2 & C. Abt 3	0.5 Sp.8 & 0.5 Sp. 9	Pier 6
Is	(in^4)	12100	12100	12100	12100
Ic (n)	(in^4)	27387	-	27387	-
Ic (3n)	(in^4)	20020	-	20020	-
Ss	(in^3)	664	664	664	664
Sc (n)	(in^3)	907	-	907	-
Sc (3n)	(in^3)	818	-	818	-
Z	(in^3)	-	767	-	767
wD	(k/')	0.89	1.29	0.89	1.29
MD	('k)	340	808	287	792
sD	(k/')	0.4	-	0.4	-
MsD	('k)	167	-	155	-
ML	('k)	550	358	573	379
M (IM)	('k)	139	87	135	89
$\frac{5}{3}$[ML+I]	('k)	1149	742	1180	780
Ma	('k)	2153	2015	2109	2044
* Mu	('k)	4191		4407	
fsD non-comp	(ksi)	6.14	14.6	5.19	14.31
fsD (comp)	(ksi)	2.45	-	2.27	-
fs$\frac{5}{3}$(ML+MI)	(ksi)	15.2	13.41	15.61	14.1
fs (Overload)	(ksi)	23.79	28.01	23.07	28.41
** fs (Total)	(ksi)		36.41		36.93
VR	(k)	40	-	40	-

GIRDER REACTION TABLE - CENTRAL AVE.

		Fascia Girder G1 & G22 (Note 2)					Interior Girder G2 & G21				
		N. Brg. C. Abt.1	C. Abt.2	Pier 6	C. Abt.3	S. Brg. C. Abt.4	N. Brg. C. Abt.1	C. Abt.2	Pier 6	C. Abt.3	S. Brg. C. Abt.4
RD	(k)	177.9	748.3	375.0	720.2	233.3	41.0	128.3	125.3	128.3	41.0
RL	(k)	66.9	83.8	83.8	83.8	66.9	43.1	54.2	55.2	53.9	43.0
Imp.	(k)	16.8	14.6	13.9	14.6	16.8	10.9	9.5	9.2	9.4	10.8
R (Total)	(k)	261.6	846.7	472.7	818.6	317.0	95.0	191.9	189.7	191.7	94.9

Note 2: Reactions for G22 are opposite hand

		Interior Girder G3-G20		
		N. Brg. C. Abt.1 & S. Brg. C. Abt.4	C. Abt.2 & C. Abt.3	Pier 6
RD	(k)	37	115	107
RL	(k)	38	50	51
Imp.	(k)	10	12	12
R (Total)	(k)	85	177	170

I_s, S_s: Non-composite moment of inertia and section modulus of the steel section used for computing f^s (Total and Overload) due to non-composite dead loads ($in.^4$ and $in.^3$).

$I_c(n)$, $S_c(n)$: Composite moment of inertia and section modulus of the steel and deck based upon the modular ratio, "n", used for computing f_s (Total and Overload) due to short-term composite live loads ($in.^4$ and $in.^3$).

$I_c(3n)$, $S_c(3n)$: Composite moment of inertia and section modulus of the steel and deck based upon 3 times the modular ratio, "3n", used for computing f_s (Total and Overload) due to long-term composite (superimposed) dead loads ($in.^4$ and $in.^3$).

Z: Plastic Section Modulus of the steel section in non-composite areas ($in.^3$).

wD: Un-factored non-composite dead load (kips/ft.).

MD: Un-factored moment due to non-composite dead load (kip-ft.).

sD: Un-factored long-term composite (superimposed) dead load (kips/ft.)

MsD: Un-factored moment due to long-term composite (superimposed) dead load (kip-ft.).

ML: Un-factored live load moment (kip-ft.).

MI: Un-factored moment due to impact (kip-ft.).

Ma: Factored design moment (kip-ft.).
$1.3\ [MD + M_sD + \frac{5}{3}(ML + M_I)]$

Mu: Compact composite moment capacity according to AASHTO LFD 10.50.1.1 or compact non-composite moment capacity according to AASHTO LFD 10.48.1 (kip-ft.).

f_s (Overload): Sum of stresses as computed from the moments below (ksi).
$MD + M_sD + \frac{5}{3}(ML + M_I)$

f_s (Total): Sum of stresses as computed from the moments below on non-compact section (ksi).
$1.3\ [MD + M_sD + \frac{5}{3}(ML + M_I)]$

VR: Maximum L + impact shear range within the composite portion of the span for stud shear connector design (kips).

* Compact section
** Braced non-compact and partially braced section

BRIDGE SEAT ELEVATIONS

(For Information Only)

Location	℄ N. Brg. C. Abut 1	℄ C. Abut. 2	℄ Pier 6	℄ C. Abut. 3	℄ S. Brg. C. Abut. 4
G1	619.08	619.70	620.47	620.82	621.55
G2	619.47	620.37	621.12	621.50	621.99
G3	622.81	623.91	624.73	625.07	625.36
G4	622.90	624.01	624.85	625.20	625.49
G5	622.98	624.11	624.97	625.32	625.62
G6	623.07	624.21	625.09	625.45	625.74
G7	623.15	624.31	625.20	625.57	625.87
G8	623.22	624.39	625.30	625.68	625.98
G9	623.26	624.45	625.39	625.77	626.07
G10	623.31	624.52	625.47	625.86	626.17
G11	623.36	624.58	625.55	625.95	626.26
G12	623.31	624.54	625.53	625.94	626.25
G13	623.15	624.40	625.41	625.83	626.14
G14	622.99	624.26	625.29	625.72	626.03
G15	622.84	624.12	625.16	625.61	625.92
G16	622.66	623.96	625.02	625.48	625.79
G17	622.47	623.78	624.86	625.34	625.64
G18	622.28	623.60	624.71	625.19	625.50
G19	622.09	623.43	624.55	625.05	625.35
G20	621.89	623.25	624.39	624.90	625.21
G21	618.45	619.63	620.74	621.31	621.81
G22	617.94	618.89	620.04	620.61	621.35

MOMENT & REACTION TABLES
CENTRAL/I-55
STRUCTURE NO. 016-0724

T·Y·LIN INTERNATIONAL

DESIGNED	-	JMA
CHECKED	-	AMD,
DRAWN	-	JMA
CHECKED	-	AMD,
DATE	-	08/02/10

REVISIONS	
NAME	DATE

SHEET NO. 45
137 SHEETS

F.A.I RTE.	SECTION	COUNTY	TOTAL SHEETS	SHEET NO.
55	0711.2R & 1011.1BR	COOK	200	75
		CONTRACT NO. 60L39		
FED. ROAD DIST. NO. 1	ILLINOIS	FED. AID PROJECT		

p:\01345\beam and bearing fabrication\55c2frametables.dgn 7:00:15 PM 8/5/2010

STATE OF ILLINOIS
DEPARTMENT OF TRANSPORTATION

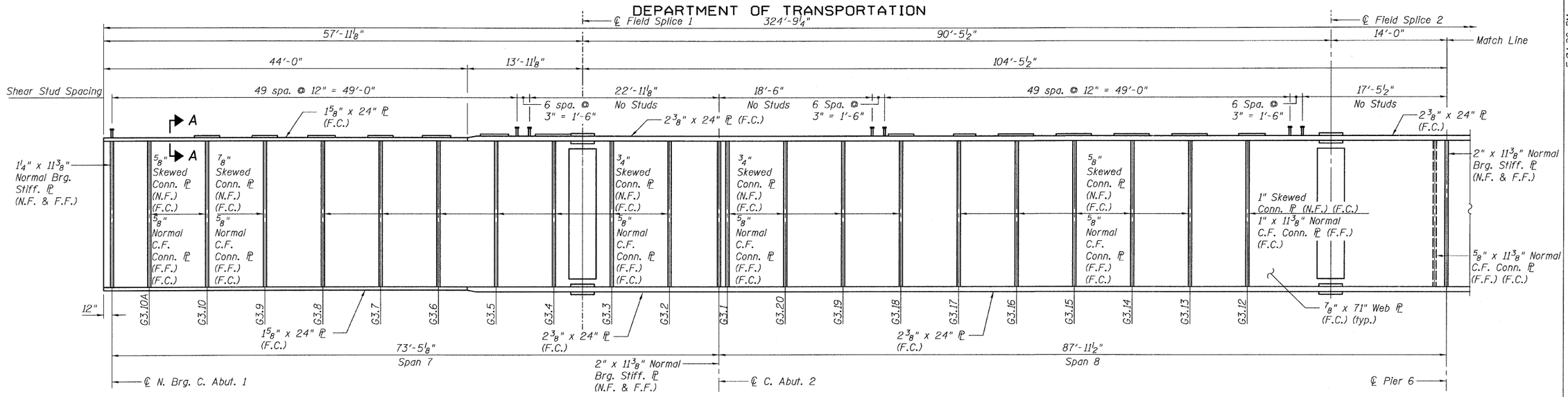

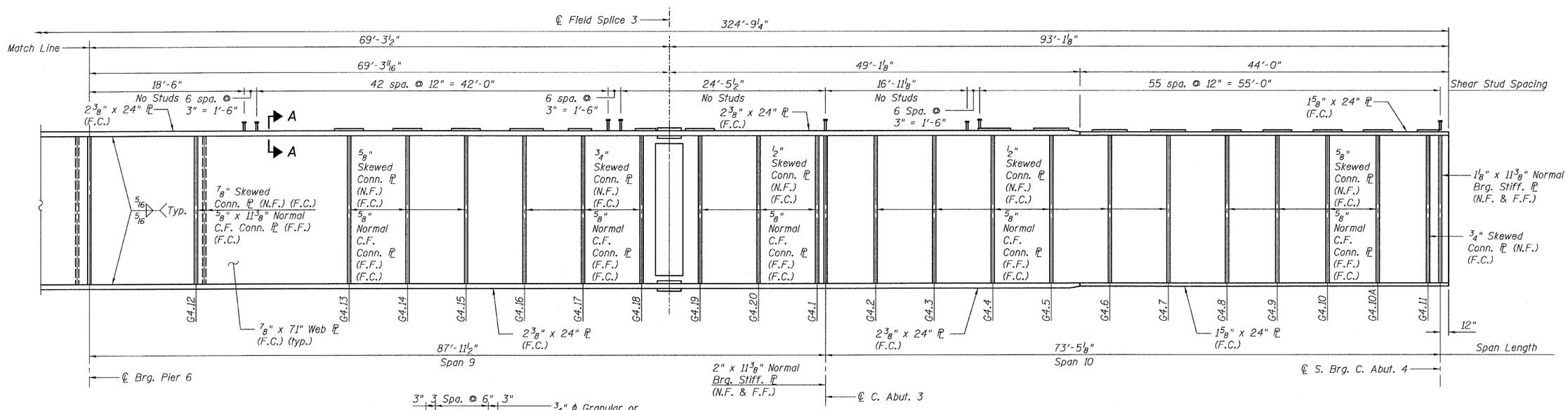

NOTES:

1. For Top of Web Elevations, see Sheet 40.
2. For Bearing stiffener and connection plate details see Sheet 53.
3. For Field Splice detail, see Sheet 52.
4. F.C.M. denotes Fracture Critical Member.
5. F.C. denotes Fracture Critical material, AASHTO Zone II.
6. N.F. denotes Near Face.
7. F.F. denotes Far Face.
8. Girder G1 shall not be cambered.

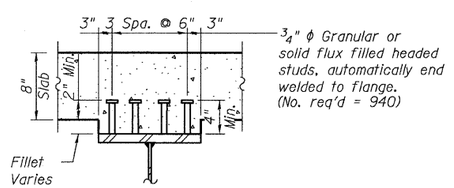

SECTION A-A
(Not in contract)

GIRDER G1 - ELEVATION (F.C.M.)
(Looking West)

GIRDER G1 - ELEVATION
CENTRAL/I-55
STRUCTURE NO. 016-0724

T·Y·LIN INTERNATIONAL

DESIGNED	- JMA	REVISIONS	
CHECKED	- AMD,	NAME	DATE
DRAWN	- JMA		
CHECKED	- AMD,		
DATE	- 08/02/10		

SHEET NO. 46
137 SHEETS

F.A.I RTE.	SECTION	COUNTY	TOTAL SHEETS	SHEET NO.
55	0711.2R & 1011.1BR	COOK	200	76
		CONTRACT NO. 60L39		
FED. ROAD DIST. NO. 1	ILLINOIS	FED. AID PROJECT		

5:04:36 PM
p:\01345\beam and bearing fabrication\i55c2beam01.dgn
8/13/2010

STATE OF ILLINOIS
DEPARTMENT OF TRANSPORTATION

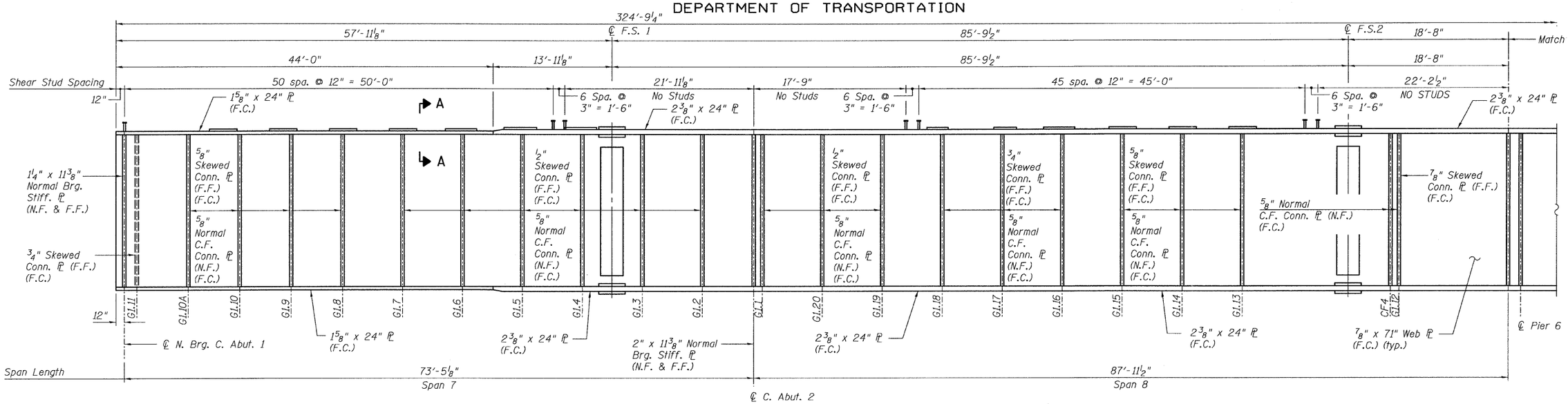

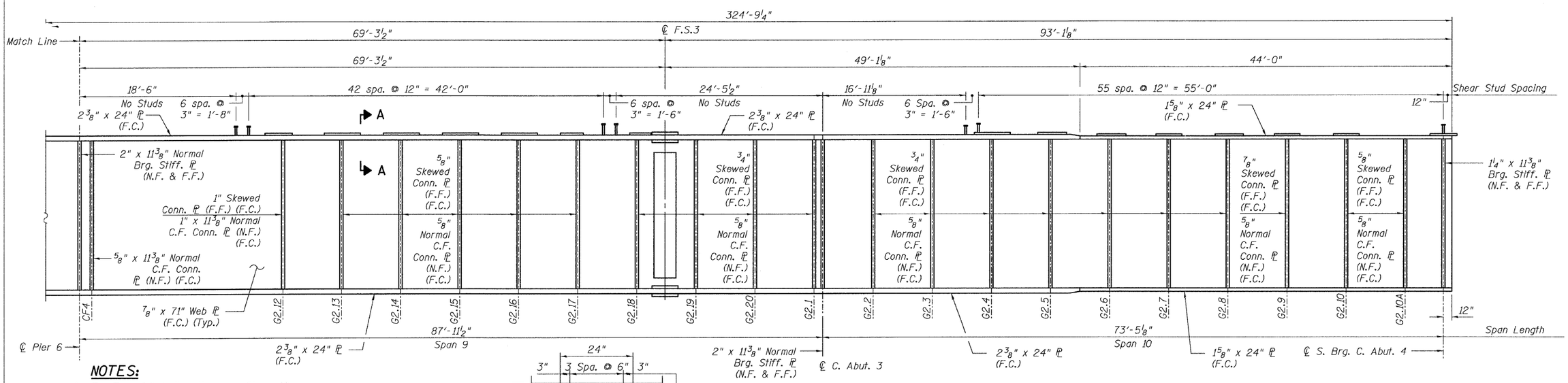

GIRDER G22 - ELEVATION (F.C.M.)

(Looking West)

NOTES:

1. For Top of Web Elevations see Sheet 40.
2. For Bearing stiffener and connection plate details see Sheets 77 thru 93.
3. For Field Splice detail, see Sheet 92.
4. F.C.M. denotes Fracture Critical Member.
5. F.C. denotes Fracture Critical Material, AASHTO Zone II.
6. N.F. denotes Near Face.
7. F.F. denotes Far Face.
8. Girder G22 shall not be cambered.

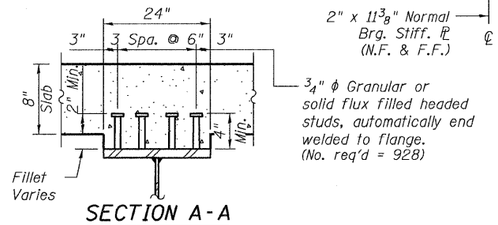

SECTION A-A

(Not in contract)

GIRDER G22- ELEVATION
CENTRAL/I-55
STRUCTURE NO. 016-0724

TY·LIN INTERNATIONAL

DESIGNED	- JMA	REVISIONS	
CHECKED	- AMD,	NAME	DATE
DRAWN	- JMA		
CHECKED	- AMD,		
DATE	- 08/02/10		

SHEET NO. 47
137 SHEETS

F.A.I RTE.	SECTION	COUNTY	TOTAL SHEETS	SHEET NO.
55	0711.2R & 1011.1BR	COOK	200	77
		CONTRACT NO. 60L39		
FED. ROAD DIST. NO. 1	ILLINOIS	FED. AID PROJECT		

4:32:51 PM
p:\01345\beam and bearing fabrication\55c2beam22.dgn
8/13/2010

STATE OF ILLINOIS
DEPARTMENT OF TRANSPORTATION

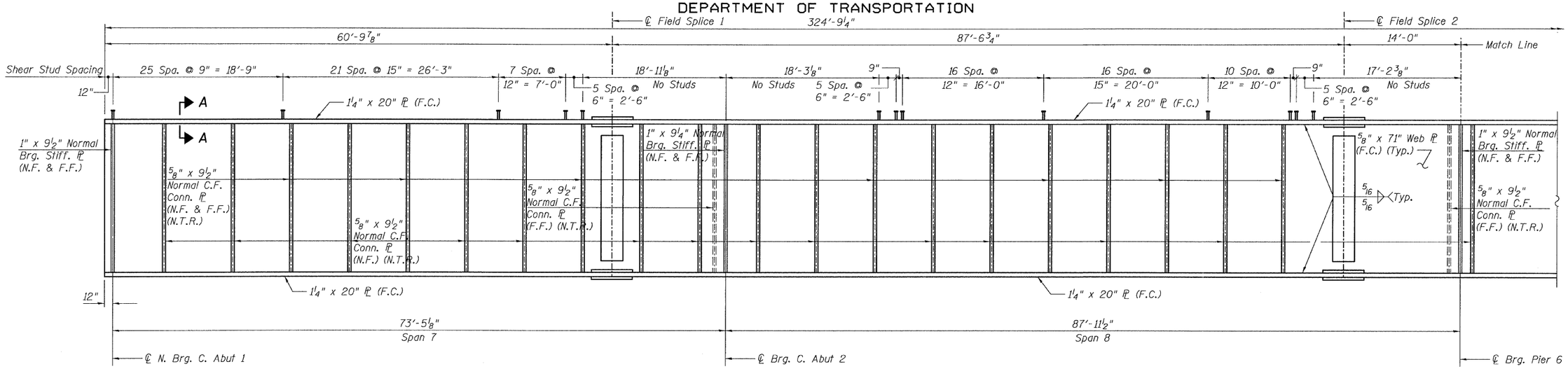

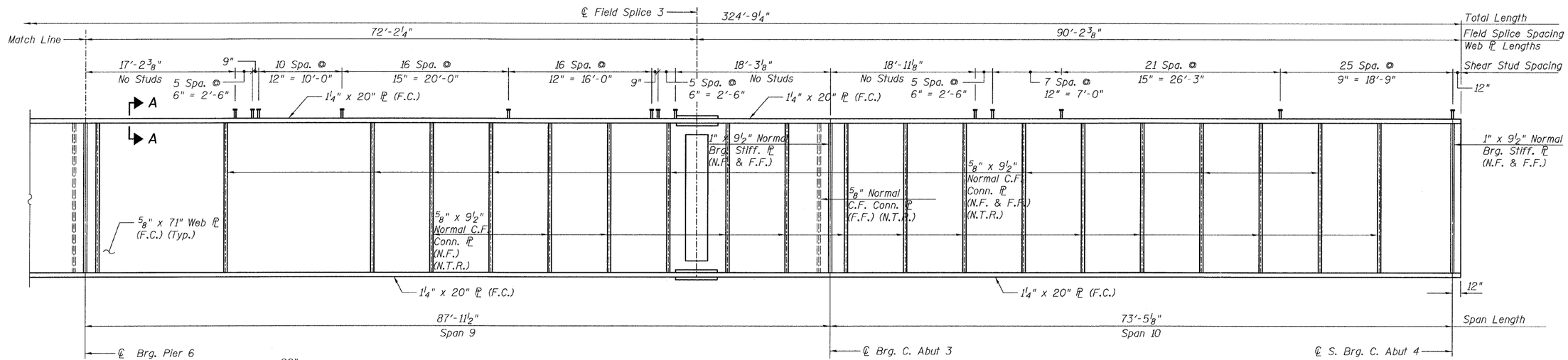

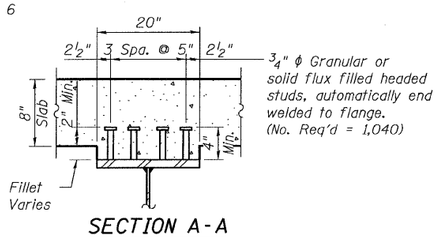

SECTION A-A
(Not in contract)

GIRDER G2 - ELEVATION (F.C.M)
(Looking West)

NOTES:

1. All Steel shown on this sheet shall be AASHTO M 270 GR 50.
2. For Top of Web Elevations, see Sheet 40.
3. For Bearing stiffener, and connection plate details, see sheet 53.
4. For Field Splice detail, See sheet 52.
5. F.C.M. denotes Fracture Critical Member
6. F.C. denotes Fracture Critical Material, AASHTO Zone II
7. N.F. denotes Near Face
8. F.F. denotes Far Face
9. Girder G2 shall not be cambered.
10. Load carrying components designated "NTR" shall conform to the supplemental requirements for Notch Toughness, Zone 2.

GIRDER G2 - ELEVATION
CENTRAL/I-55
STRUCTURE NO. 016-0724

TY·LIN INTERNATIONAL

DESIGNED	- JMA	REVISIONS	
CHECKED	- AMD,	NAME	DATE
DRAWN	- JMA		
CHECKED	- AMD,		
DATE	- 08/02/10		

SHEET NO. 48
137 SHEETS

F.A.I RTE.	SECTION	COUNTY	TOTAL SHEETS	SHEET NO.
55	0711.2R & 1011.1BR	COOK	200	78
		CONTRACT NO. 60L39		
FED. ROAD DIST. NO. 1	ILLINOIS	FED. AID PROJECT		

p:\01345\beam and bearing fabrication\55c2beam02.dgn 4:32:52 PM 8/13/2010

STATE OF ILLINOIS
DEPARTMENT OF TRANSPORTATION

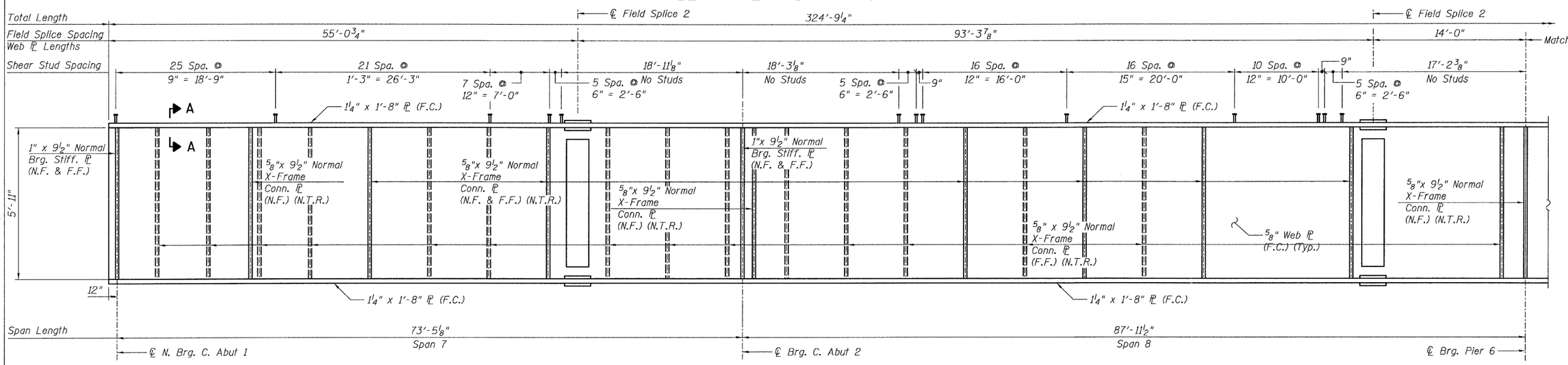

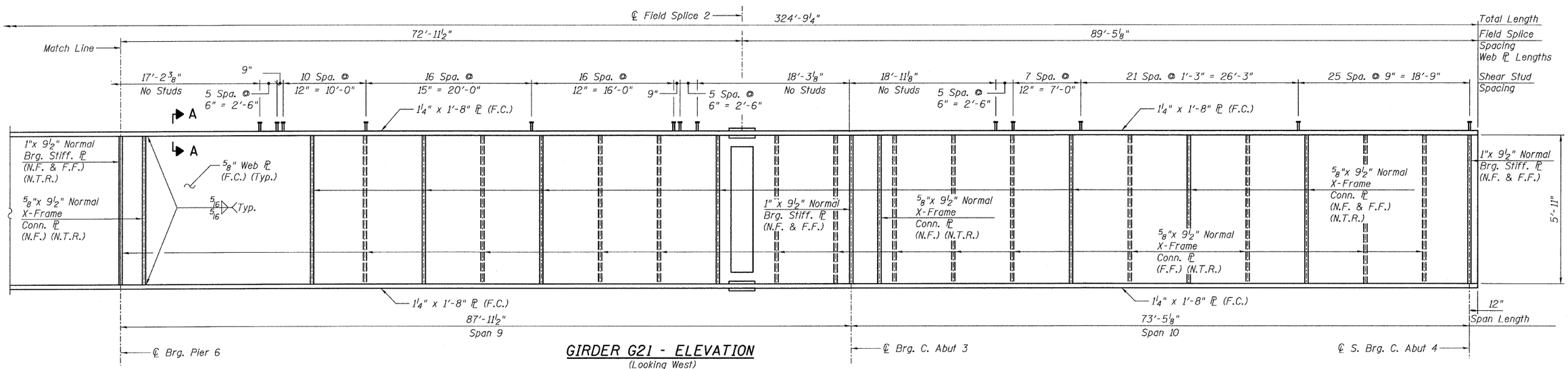

GIRDER G21 - ELEVATION

(Looking West)
(F.C.M.)

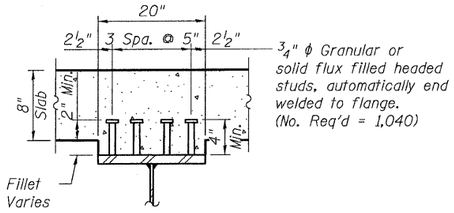

SECTION A-A

(Not in contract)

NOTES:

1. All Steel shown on this sheet shall be AASHTO M 270 GR 50.
2. For Top of Web Elevations, see sheet 40.
3. For Bearing stiffener and connection plate details, see sheet 53.
4. For Field Splice detail, See sheet 52.
5. F.C.M. denotes Fracture Critical Member
6. F.C. denotes Fracture Critical Material, AASHTO Zone II
7. N.F. denotes Near Face
8. F.F. denotes Far Face
9. Girder G21 shall not be cambered.
10. Load carryiong components designated "NTR" shall conform to the supplemental requirements for Notch Toughness, Zone 2.

GIRDER G21- ELEVATION
CENTRAL/I-55
STRUCTURE NO. 016-0724

TYLIN INTERNATIONAL

DESIGNED	JMA
CHECKED	AMD,
DRAWN	JMA
CHECKED	AMD,
DATE	08/02/10

REVISIONS	
NAME	DATE

SHEET NO. 49
137 SHEETS

F.A.I RTE.	SECTION	COUNTY	TOTAL SHEETS	SHEET NO.
55	0711.2R & 1011.1BR	COOK	200	79
		CONTRACT NO. 60L39		
FED. ROAD DIST. NO. 1	ILLINOIS	FED. AID PROJECT		

p:\01345\beam and bearing fabrication\55c2beam21.dgn 5:24:37 PM 8/13/2010

STATE OF ILLINOIS
DEPARTMENT OF TRANSPORTATION

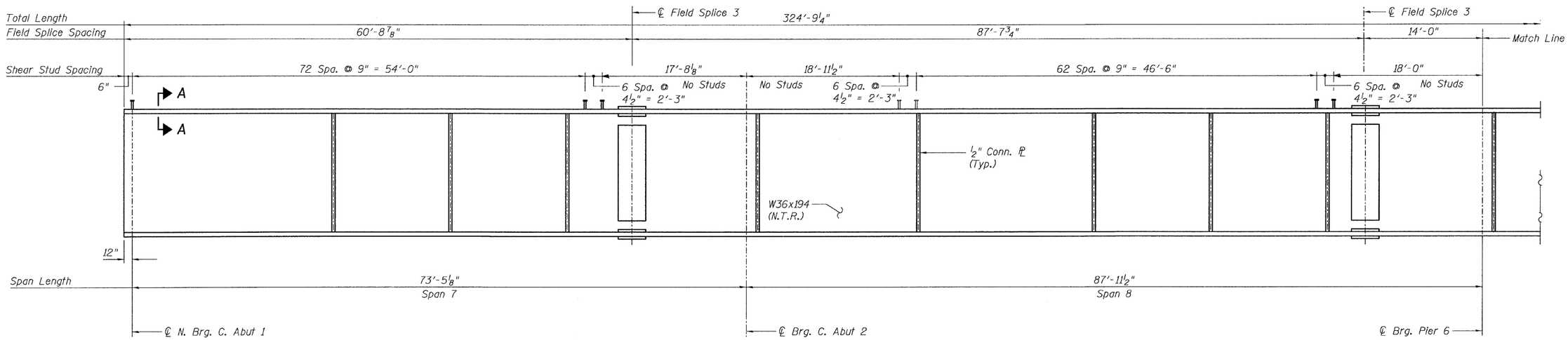

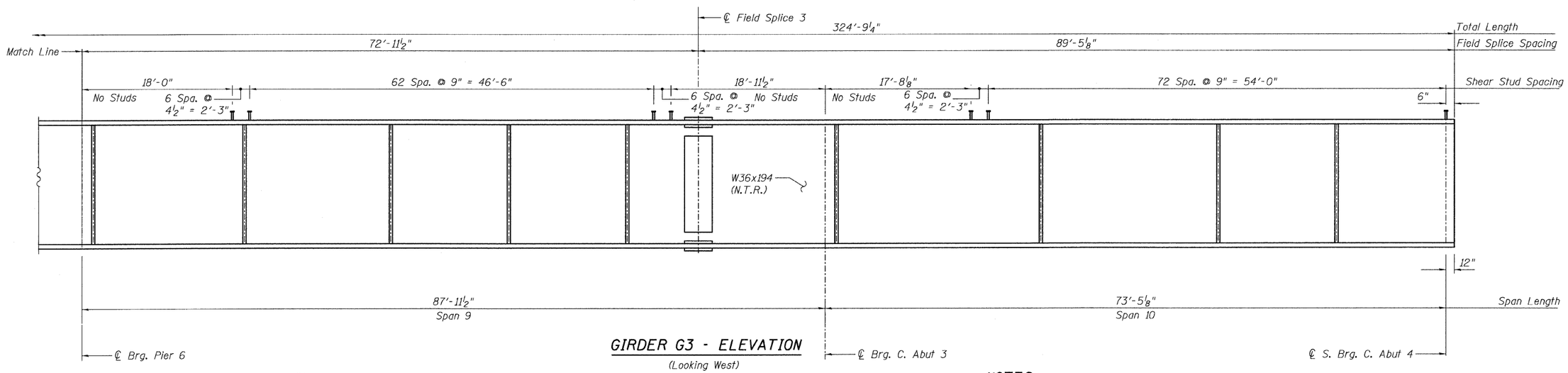

GIRDER G3 - ELEVATION

(Looking West)
(Girder G20 Looking East)

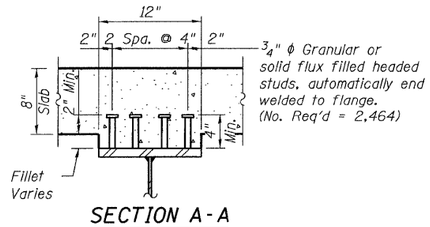

SECTION A-A

(Not in contract)

NOTES:

1. All steel on this sheet shall be AASHTO M 270 Grade 50.
2. For Connection Plate details, see Sheet 53.
3. For Field Splice detail, see Sheet 53.
4. Load carrying components designated "NTR" shall conform to the supplemental requirements for Notch Toughness Zone 2
5. N.F. denotes Near Face.
6. F.F. denotes Far Face.

GIRDER G3/G20 - ELEVATION
CENTRAL/I-55
STRUCTURE NO. 016-0724

TY·LIN INTERNATIONAL

DESIGNED	-	JMA
CHECKED	-	AMD,
DRAWN	-	JMA
CHECKED	-	AMD,
DATE	-	08/02/10

REVISIONS	
NAME	DATE

SHEET NO. 50
137 SHEETS

F.A.I RTE.	SECTION	COUNTY	TOTAL SHEETS	SHEET NO.
55	0711.2R & 1011.1BR	COOK	200	80
		CONTRACT NO. 60L39		
FED. ROAD DIST. NO. 1	ILLINOIS	FED. AID PROJECT		

4:32:54 PM
p:\01345\beam and bearing fabrication\55c2beam03.dgn
8/13/2010

STATE OF ILLINOIS
DEPARTMENT OF TRANSPORTATION

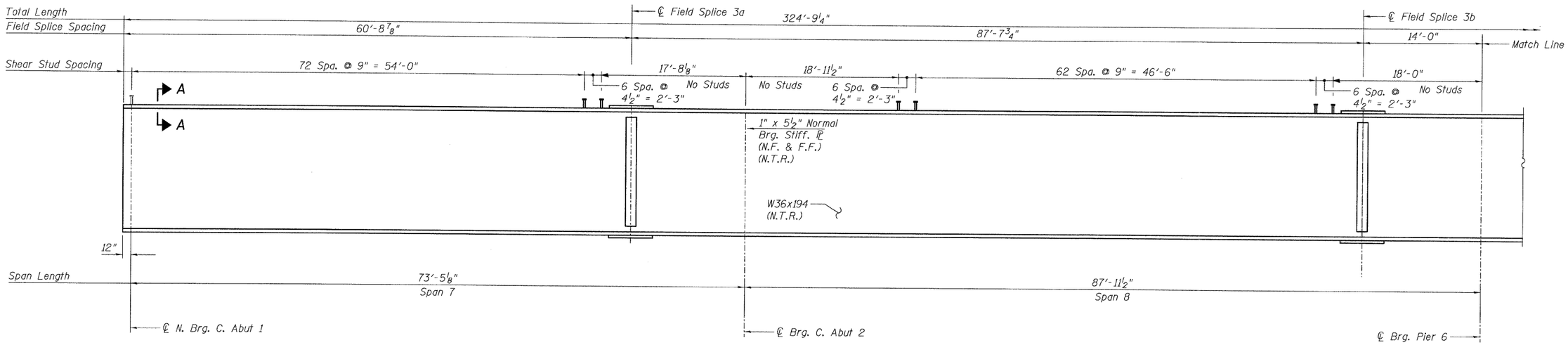

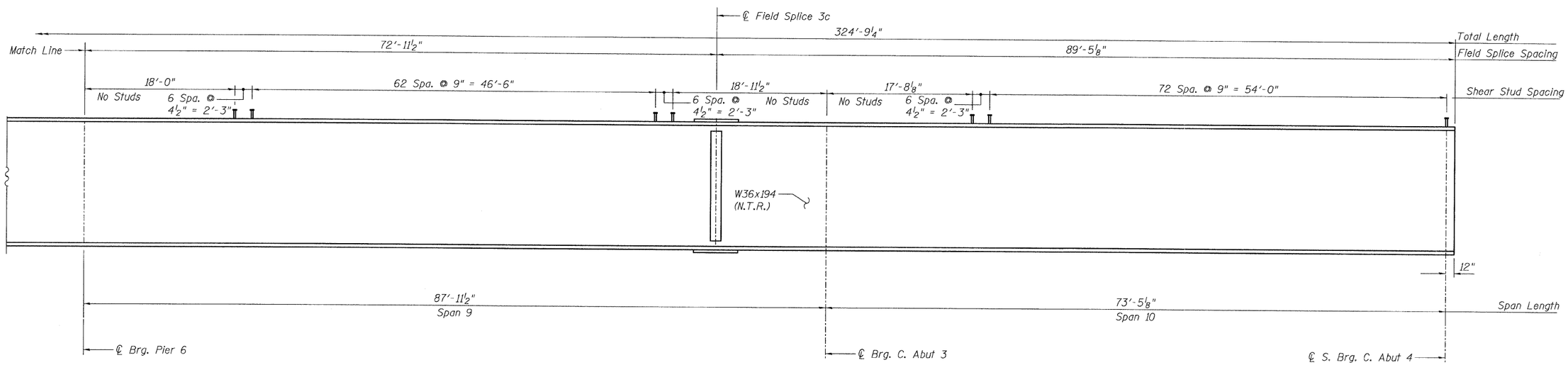

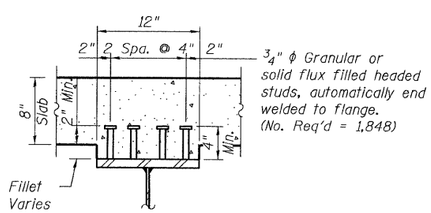

SECTION A-A
(Not in contract)

GIRDERS G4 THRU G19 - ELEVATION
(Looking West)
(N.T.R.)

NOTES:

1. All steel shown on this sheet shall be AASHTO M 270 Grade 50.
2. N.T.R. denotes Notch Toughness Requirements.
3. N.F. denotes Near Face.
4. F.F. denotes Far Face.

GIRDERS G4 THRU G19 EL
CENTRAL/I-55
STRUCTURE NO. 016-0724

TY·LIN INTERNATIONAL

DESIGNED	-	JMA	
CHECKED	-	AMD,	
DRAWN	-	JMA	
CHECKED	-	AMD,	
DATE	-	08/02/10	

REVISIONS	
NAME	DATE

SHEET NO. 51
137 SHEETS

F.A.I RTE.	SECTION	COUNTY	TOTAL SHEETS	SHEET NO.
55	0711.2R & 1011.1BR	COOK	200	81
		CONTRACT NO. 60L39		
FED. ROAD DIST. NO. 1	ILLINOIS	FED. AID PROJECT		

c:\01345\beam and bearing fabrication\55c2beam84-19.dgn 2:23:30 PM 8/2/2010

STATE OF ILLINOIS
DEPARTMENT OF TRANSPORTATION

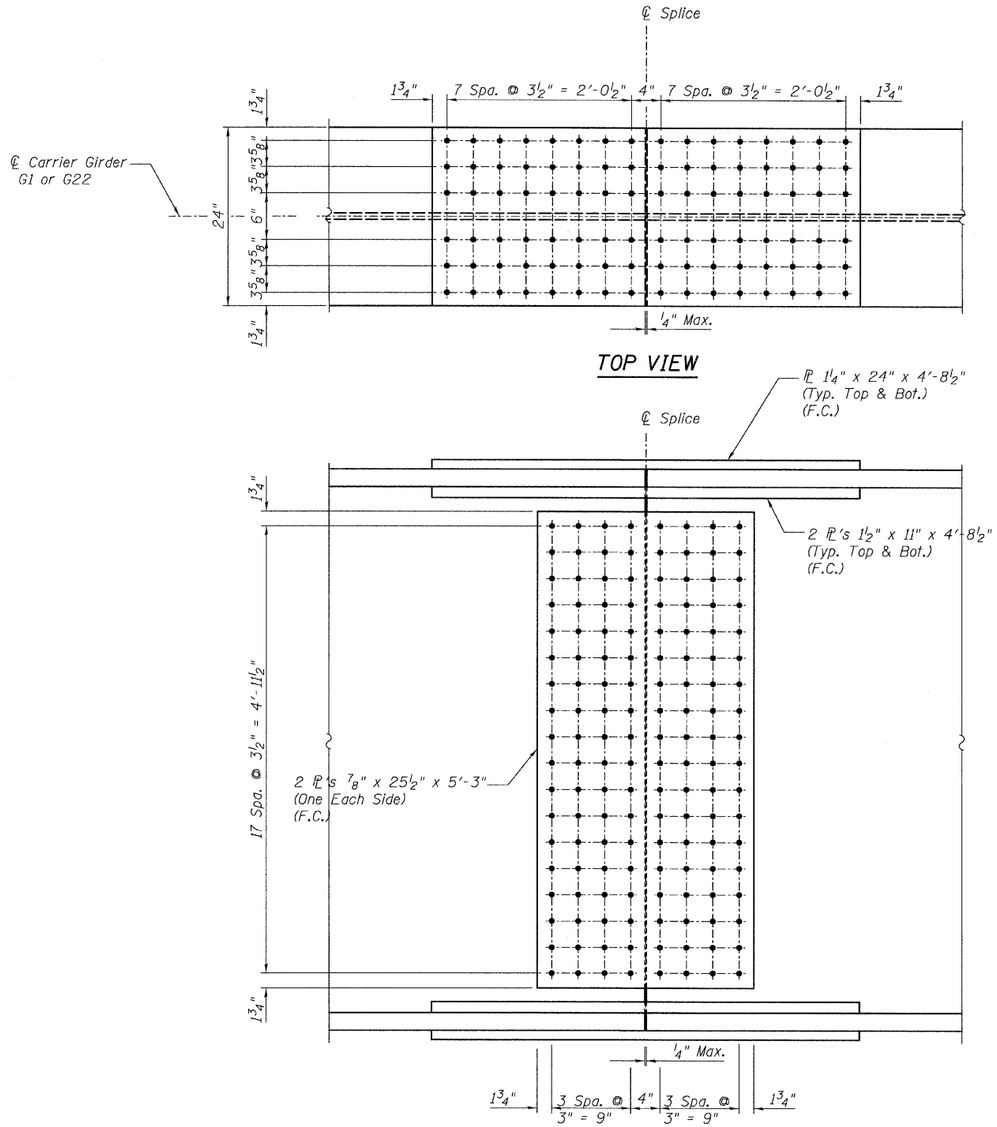

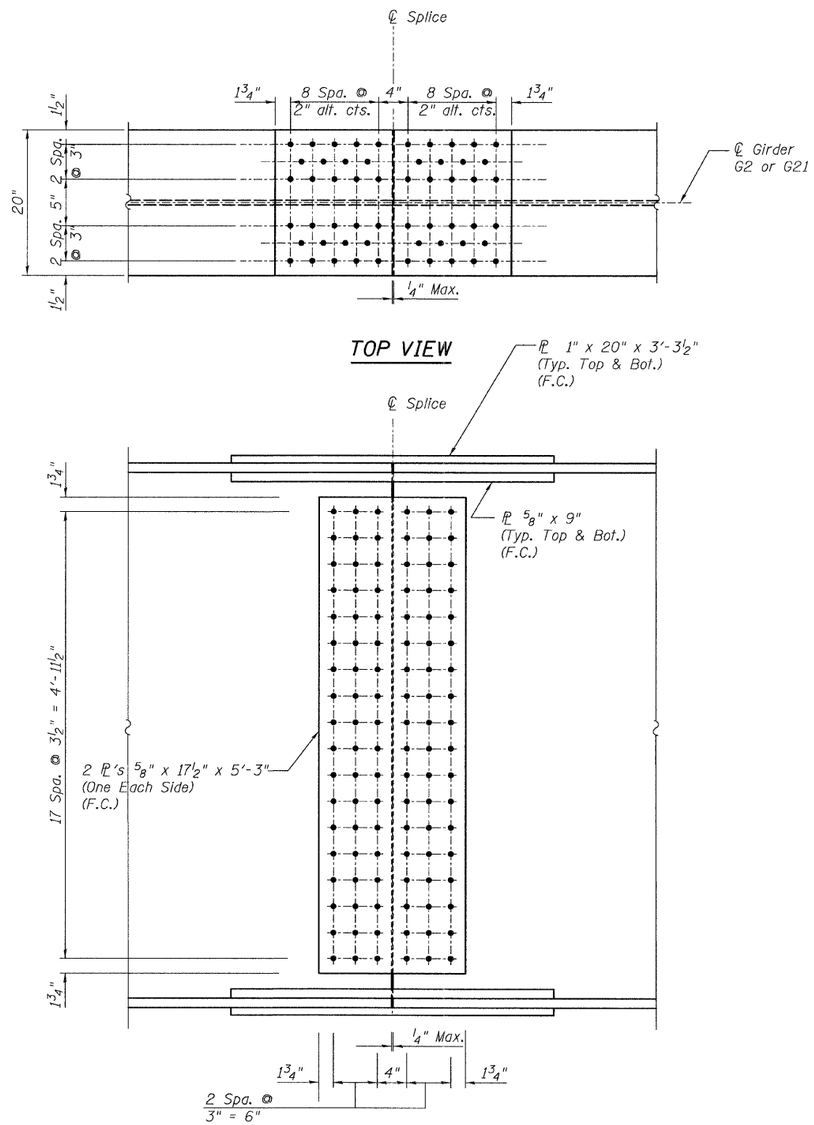

NOTES:

1. All splice materials to be AASHTO M 270 Grade 50.
2. All bolts shall be 1" ϕ with 1 1/16" ϕ holes for G1 and G22 Field Splices and ⅞" ϕ with 15/16" ϕ holes for G2 and G21 Field Splices.
3. F.C. denotes fracture critical material, AASHTO Zone II.

FIELD SPLICES
CENTRAL / I-55
STRUCTURE NO. 016-0724

TYLIN INTERNATIONAL

DESIGNED	JMA
CHECKED	AMD,
DRAWN	JMA
CHECKED	AMD,
DATE	08/02/10

REVISIONS	
NAME	DATE

SHEET NO. 52
137 SHEETS

F.A.I RTE.	SECTION	COUNTY	TOTAL SHEETS	SHEET NO.
55	0711.2R & 1011.1BR	COOK	200	82
		CONTRACT NO. 60L39		
FED. ROAD DIST. NO. 1	ILLINOIS	FED. AID PROJECT		

8/5/2010

p:\01345\beam and bearing fabrication\I55c2frame1t11.dgn 2:42:12 PM

STATE OF ILLINOIS
DEPARTMENT OF TRANSPORTATION

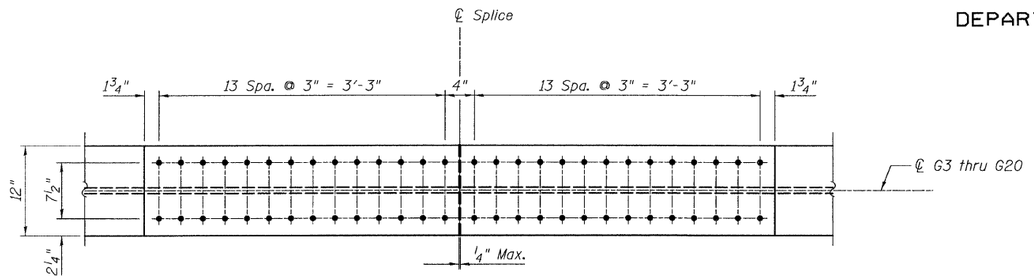

TOP VIEW

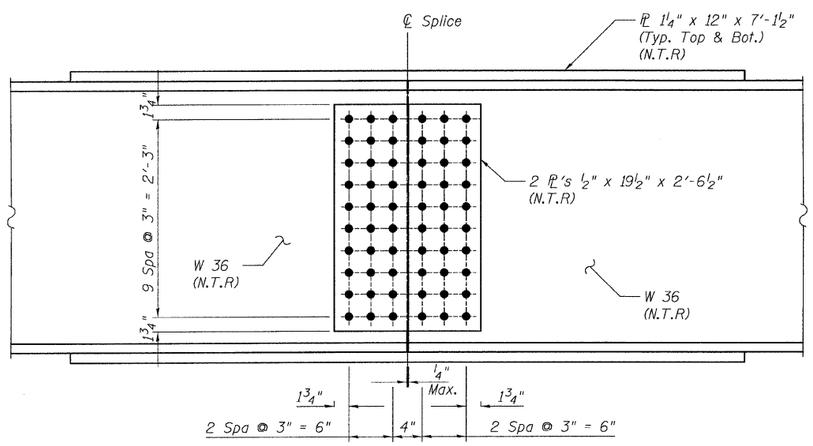

ELEVATION
FIELD SPLICES 3a, 3b, 3c
(G3 Thru G20)

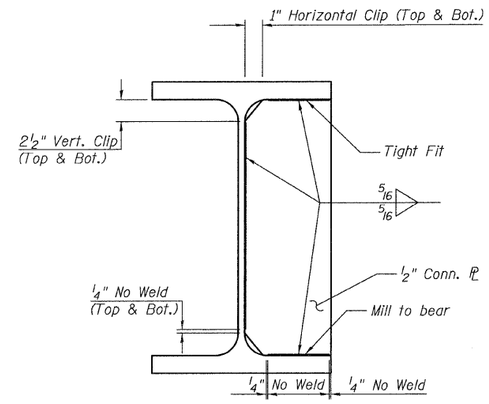

CONN. PLATE DETAIL
FOR ROLLED BEAM

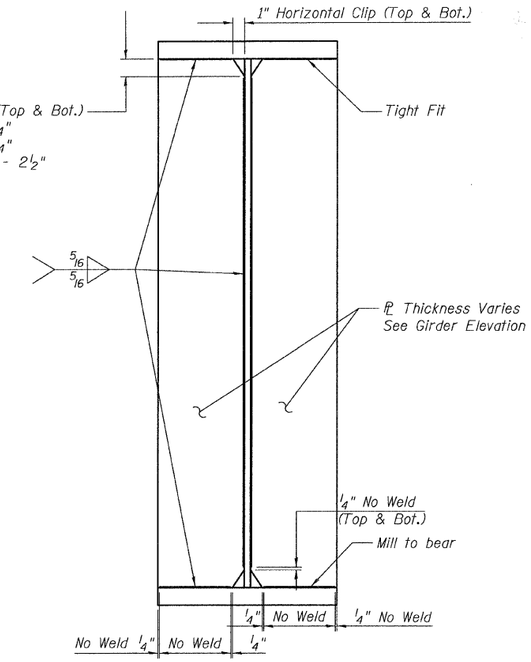

TYPICAL BEARING STIFFENER AND CONN PLATE
DETAIL @ GIRDERS

NOTES:

1. All splice materials to be AASHTO M 270 Grade 50.
2. All bolts shall be ⅞" ϕ AASHTO M164 with 15/16" ϕ holes.
3. Load carrying components designated *NTR* shall conform to the Supplemental Requirements for Notch Toughness, Zone 2.

FIELD SPLICE 3 & CONNECTION DETAILS
CENTRAL / I-55
STRUCTURE NO. 016-0724

TY·LIN INTERNATIONAL	DESIGNED - JMA	REVISIONS	
	CHECKED - AMD,	NAME	DATE
	DRAWN - JMA		
	CHECKED - AMD,		
	DATE - 08/02/10		

SHEET NO. 53	F.A.I RTE.	SECTION	COUNTY	TOTAL SHEETS	SHEET NO.
137 SHEETS	55	0711.2R & 1011.1BR	COOK	200	83
			CONTRACT NO. 60L39		
	FED. ROAD DIST. NO. 1	ILLINOIS	FED. AID PROJECT		

p:\01345\beam end bearing fabrication\55c2frame4t12.dgn 8/13/2010 4:32:54 PM

STATE OF ILLINOIS
DEPARTMENT OF TRANSPORTATION

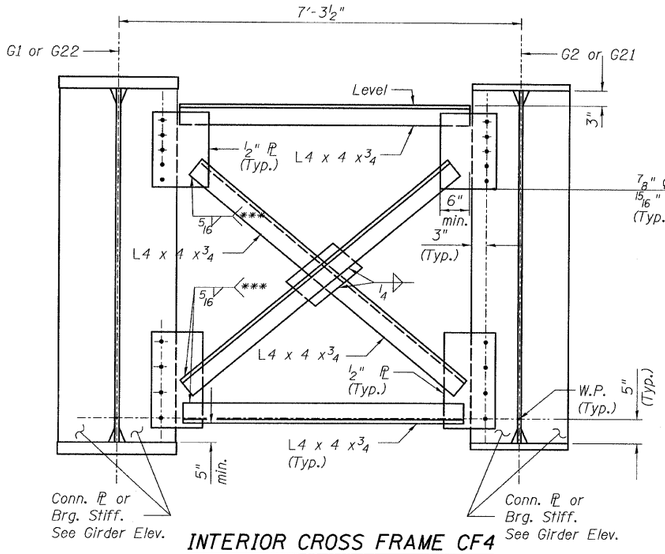

INTERIOR CROSS FRAME CF4
(80 Required)

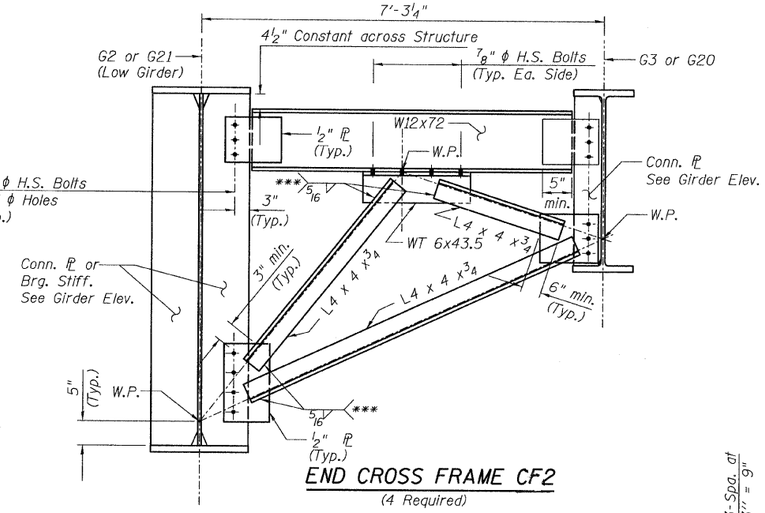

END CROSS FRAME CF2
(4 Required)

*** Fillet weld angle along 3 sides on one face of gusset plate.

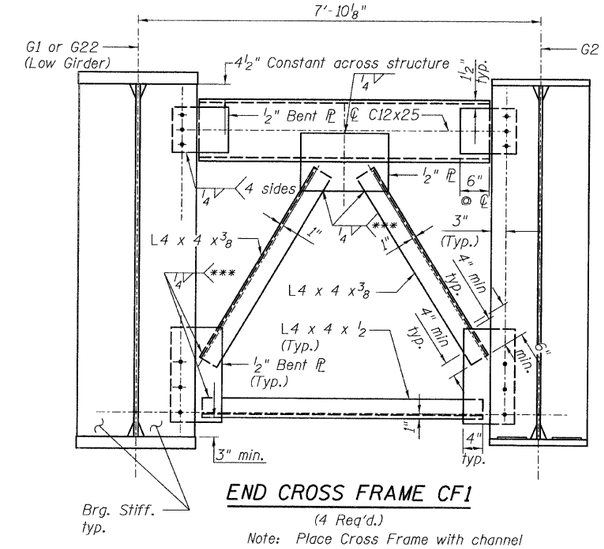

END CROSS FRAME CF1
(4 Req'd.)
Note: Place Cross Frame with channel flanges and oustanding angle legs outward from joint.
Weld on near side for 1/2" plate.

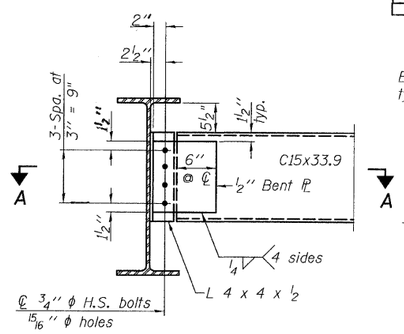

END DIAPHAGM D2
(32 Required)
Note: Two hardened washers required for each set of oversized holes.

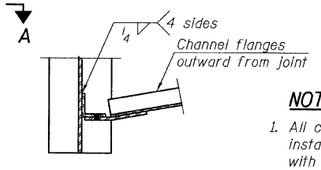

SECTION A-A

NOTES:

1. All cross frames or diaphragms shall be installed as steel is erected and secured with erection pins and bolts except as otherwise noted. Individual cross frames or diaphragms at supports may be temporarily disconnected to install bearing anchor rods.

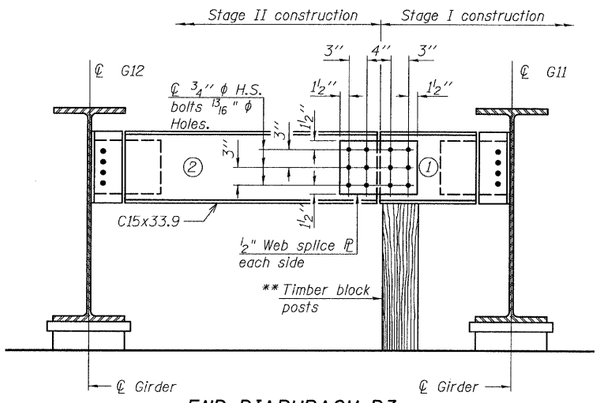

END DIAPHRAGM D3
(2 Required)

** Cost of Timber Block Posts is included with Erecting Structural Steel.

END DIAPHRAGM STAGE CONSTRUCTION SEQUENCE

1.) Order diaphragm in two sections.
2.) Attach section 1 of diaphragm to Beam G11.
3.) Place timber block posts between section 1 of diaphragm and abutment bearing section.
4.) Attach section 2 of diaphragm to both Beam G12 and section 1 of diaphragm during stage II construction with splice plates.
5.) Remove timber block posts.

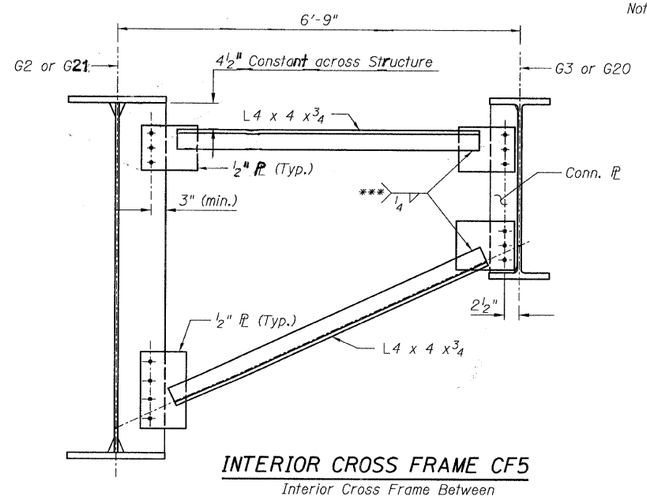

INTERIOR CROSS FRAME CF5
Interior Cross Frame Between G2 & G3 (G20 & G21)
(34 Required)

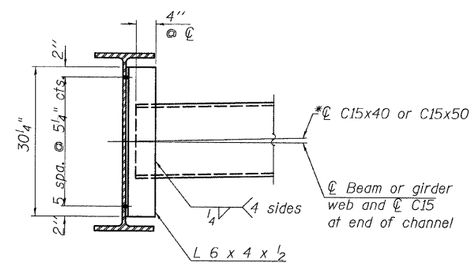

INTERIOR DIAPHAGM D1
(255 Required)
Note:
Two hardened washers required for each set of oversized holes.
*Alternate channels are permitted to facilitate material acquisition. Calculated weight of structural steel is based on the lighter section. The alternate, if utilized, shall be provided at no additional cost to the Department.

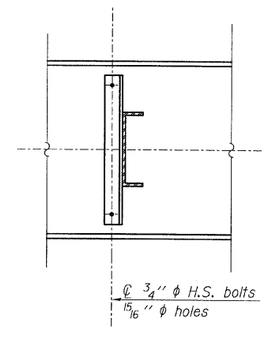

CROSS FRAMES & DIAPH.
CENTRAL/I-55
STRUCTURE NO. 016-0724

TY·LIN INTERNATIONAL			
DESIGNED - JMA	REVISIONS		
CHECKED - AMD.	NAME	DATE	
DRAWN - JMA			
CHECKED - AMD.			
DATE - 08/02/10			

SHEET NO. 54	F.A.I RTE.	SECTION	COUNTY	TOTAL SHEETS	SHEET NO.
137 SHEETS	55	0711.2R & 1011.1BR	COOK	200	84
			CONTRACT NO. 60L39		
	FED. ROAD DIST. NO. 1	ILLINOIS	FED. AID PROJECT		

8/2/2010
e:\01345\beam and bearing fabrication\i55c2frameat13.dgn
2:23:33 PM

STATE OF ILLINOIS
DEPARTMENT OF TRANSPORTATION

GIRDER MOMENT TABLE - RAMP 1 FLARE

		Girder 1.1			Girder 1.2			Girder 1.3 to 1.7			Girder 1.8			Girder 1.9 to 1.10A & 1.13 to 1.15	Girder 1.11 & 1.16 to 1.18	Girder 1.19 & 1.20	Crosshead Girder	
		0.4 Sp. R1-1	Pier	0.6 Sp. R1-2	0.4 Sp. R1-1	Pier	0.6 Sp. R1-2	0.4 Sp. R1-1	Pier	0.6 Sp. R1-2	0.4 Sp. R1-1	Pier	0.6 Sp. R1-2	0.5 Sp.	0.5 Sp.	0.5 Sp.	Bearing 1	0.5 Sp.
Is	(in4)	30,764	30,764	30,764	30,764	30,764	30,764	30,764	30,764	30,764	53,461	53,461	53,461	9,040	15,000	40,988	138,181	138,181
Ic (n)	(in4)	63,774		63,774	63,774		63,774	63,774		63,774	97,867		97,867		31,861	93,600		
Ic (3n)	(in4)	47,892		47,892	47,892		47,892	47,892		47,892	74,166		74,166		23,421	66,730		
Ss	(in3)	1,099	1,099	1,099	1,099	1,099	1,099	1,099	1,099	1,099	1,711	1,711	1,711	504	837	1,788	4,268	4,268
Sc (n)	(in3)	1,408		1,408	1,408		1,408	1,408		1,408	2,109		2,109		1,096	2,271		
Sc (3n)	(in3)	1,294		1,294	1,294		1,294	1,294		1,294	1,935		1,935		995	2,092		
Z	(in3)													943				
ℓ	(k/')	1.27	1.32	0.93	1.12	1.32	0.93	0.93	1.32	0.93	0.94	1.3	2.2	1.57	1.10	1.14		
M ℓ	('k)	132.1	1066.3	643.6	801.9	1585.2	436.8	743.6	1431.8	414.1	676.1	1773.5	890.1	251.7	736.0	1286.5	6453.0	2361.0
s ℓ	(k/')	0.43		0.39	0.51		0.39	0.39		0.39	0.36		0.8		0.44	0.45		
Ms ℓ	('k)	65.9		286.4	410.8		205.4	339.9		199.0	274.9		228.6		296.2	503.8		
M L	('k)	446.9	394.0	680.2	917.7	524.2	674.0	786.3	496.7	648.3	770.4	481.2	531.0	215.0	588.3	842.5	866.0	1188.2
M (Imp)	('k)	120.7	98.0	156.8	201.3	118.4	157.0	172.4	112.9	152.8	169.1	112.7	133.2	64.5	176.5	191.6	203.0	278.0
5/3[M L M(Imp)]	('k)	946.0	820.0	1395.0	1865.0	1071.0	1385.0	1597.8	1016.0	1335.2	1565.8	989.8	1107.0	465.8	1274.7	1723.5	1781.7	2443.7
Ma	('k)	1487.2	2452.2	3022.5	4001.0	3453.1	2635.4	3485.7	3182.1	2532.8	3271.9	3592.3	2893.4	932.8	2998.9	4567.9	10705.1	6246.1
Mu	('k)	7179.0		7179.0	7179.0		7179.0	7179.0		7179.0	10291.0		10291.0	3929.0	5068.0	9994.0		
fs ℓ (non-comp)	(ksi)	1.4	11.6	7.0	8.8	17.3	4.8	8.1	15.6	4.5	4.7	12.4	6.2	6.0	10.6	8.6	18.1	6.6
fs ℓ (comp)	(ksi)	0.6		2.7	3.8		1.9	3.2		1.8	1.7		1.4		3.6	2.9		
fs 5/3 (L + Imp)	(ksi)	8.1	9.0	11.9	15.9	11.7	11.8	13.6	11.1	11.4	8.9	6.9	6.3	11.1	14.0	9.1	5.0	6.9
fs (Overload)	(ksi)	10.1	20.6	21.6	28.5	29.0	18.5	24.9	26.7	17.7	15.4	19.4	14.0	17.1	28.1	20.6	23.2	13.5
fs (Total)	(ksi)		26.8			37.7			34.7			25.2		22.2			30.1	17.6
VR	(k)	59.3		54.6	58.6		57.2	55.5		56.7	49.4		52.1	46.7	52.6	53.0		

GIRDER REACTION TABLE - RAMP 1 FLARE

		Girder 1.1			Girder 1.2			Girder 1.3 to 1.7			Girder 1.8			Girder 1.9 to 1.10A & 1.13 to 1.15	Girder 1.11 & 1.16 to 1.18	Girder 1.19 & 1.20	Crosshead Girder	
		FB 1.12	Pier	Carrier Girder	R1 Abut.	Pier	Carrier Girder	R1 Abut.	Pier	Carrier Girder	R1 Abut.	Pier	Carrier Girder				Bearing 1	Bearing 2
R ℓ	(k)	23.1	134.8	50.6	61.8	163.4	42.5	53.9	154.0	41.1	50.8	196.4	69.6	26.1	63.5	100.3	1201.6	573.1
R L	(k)	40.0	53.4	41.5	44.5	59.9	41.8	42.4	58.5	41.7	37.8	56.5	36.2	35.9	40.0	42.8	163.0	120.9
Imp.	(k)	10.8	9.6	9.6	9.7	9.4	9.7	9.3	9.3	9.8	8.3	9.3	9.1	10.8	12.0	9.7	38.1	28.3
R (Total)	(k)	73.9	197.8	101.7	116.0	232.7	94.0	105.6	221.8	92.6	96.9	262.2	114.9	72.8	115.5	152.8	1402.7	722.3

I_s, S_s: Non-composite moment of inertia and section modulus of the steel section used for computing fs (Total and Overload) due to non-composite dead loads (in.^{4} and in.^{3}).

$I_c(n)$, $S_c(n)$: Composite moment of inertia and section modulus of the steel and deck based upon the modular ratio, "n", used for computing fs (Total and Overload) due to short-term composite live loads (in.^{4} and in.^{3}).

$I_c(3n)$, $S_c(3n)$: Composite moment of inertia and section modulus of the steel and deck based upon 3 times the modular ratio, "3n", used for computing fs (Total and Overload) due to long-term composite (superimposed) dead loads (in.^{4} and in.^{3}).

Z: Plastic Section Modulus of the steel section in non-composite areas (in.^{3}).

ℓ: Un-factored non-composite dead load (kips/ft.).

M ℓ: Un-factored moment due to non-composite dead load (kip-ft.).

s ℓ: Un-factored long-term composite (superimposed) dead load (kips/ft.)

Ms ℓ: Un-factored moment due to long-term composite (superimposed) dead load (kip-ft.).

ML: Un-factored live load moment (kip-ft.).

M_I: Un-factored moment due to impact (kip-ft.).

M_a: Factored design moment (kip-ft.).
$1.3\ [M\ell + M_s\ell + \frac{5}{3}(ML + M_I)]$

M_u: Compact composite moment capacity according to AASHTO LFD 10.50.1.1 or compact non-composite moment capacity according to AASHTO LFD 10.48.1 (kip-ft.).

fs (Overload): Sum of stresses as computed from the moments below (ksi).
$M\ell + M_s\ell + \frac{5}{3}(ML + M_I)$

fs (Total): Sum of stresses as computed from the moments below on non-compact section (ksi).
$1.3\ [M\ell + M_s\ell + \frac{5}{3}(ML + M_I)]$

VR: Maximum L + impact shear range within the composite portion of the span for stud shear connector design (kips).

MOMENT TABLE 1
RAMP 1 FLARE
STRUCTURE NO. 016-0724

T·Y·LIN INTERNATIONAL

DESIGNED	EKH, JMA
CHECKED	AMD,
DRAWN	EKH, JMA
CHECKED	AMD,
DATE	08/02/10

REVISIONS	
NAME	DATE

SHEET NO. 55
137 SHEETS

F.A.I RTE.	SECTION	COUNTY	TOTAL SHEETS	SHEET NO.
55	0711.2R & 1011.1BR	COOK	200	85
		CONTRACT NO. 60L39		
FED. ROAD DIST. NO. 1	ILLINOIS	FED. AID PROJECT		

2:12:38 PM
p:\01345\beam and bearing fabrication\55flframeedtl1.dgn
8/2/2010

STATE OF ILLINOIS
DEPARTMENT OF TRANSPORTATION

GIRDER MOMENT TABLE - RAMP 1 FLARE

Girder 1.12				
		0.4 Sp. R1-1	Pier	0.6 Sp. R1-2
I_s	(in^4)	126,687	126,687	126,687
$I_c(n)$	(in^4)	185,044	185,044	185,044
$I_c(3n)$	(in^4)	150,261	150,261	150,261
S_s	(in^3)	3913	3913	3913
$S_c(n)$	(in^3)	4410	4410	4410
$S_c(3n)$	(in^3)	4145	4145	4145
S_1	(in^3)	228	228	228
$\wp$	(k/')	1.11	1.54	2.43
$M\wp$	('k)	646.6	2783.5	1418
$s\wp$	(k/')	0.34	0.53	0.91
$M_s\wp$	('k)	197.9	956.7	533.7
$M\text{L}$	('k)	722.9	828.5	803.4
M_I	('k)	157.6	170.7	156.7
$\frac{5}{3}[M\text{L} + M_I]$	('k)	1467.5	1665.3	1600.2
M_a	('k)	3005.6	7027.2	4617.4
M_{b1}	('k)	24.1	49.8	44.8
$f_s\wp$ (non-comp)	(ksi)	2.0	8.5	4.3
$f_s\wp$ (comp)	(ksi)	0.6	2.8	1.5
$f_s\ \frac{5}{3}[M\text{L} + M_I]$	(ksi)	4.0	4.5	4.4
f_1	(ksi)	1.3	2.6	2.4
f_s (Overload)	(ksi)	6.5	15.8	10.2
f_s (Total)	(ksi)	8.6	20.6	13.4
F_{cr} (Overload)	(ksi)	47.5	47.5	47.5
VR	(k)	69.1		70.4
F_{cr}	(ksi)	49.8	48.4	49.7

GIRDER REACTION TABLE - RAMP 1 FLARE

Girder 1.12				
		R1 Abut.	Pier	Carrier Girder
$R\wp$	(k)	50.2	371.7	66.4
$R\text{L}$	(k)	42.9	83.3	41.0
R_I	(k)	9.4	17.1	8.0
R_{Total}	(k)	102.5	472.1	115.4

I_s, S_s: Non-composite moment of inertia and section modulus of the steel section used for computing f_s (Total and Overload) due to non-composite dead loads ($in.^4$ and $in.^3$).

$I_c(n)$, $S_c(n)$: Composite moment of inertia and section modulus of the steel and deck based upon the modular ratio, "n", used for computing f_s (Total and Overload) due to short-term composite live loads ($in.^4$ and $in.^3$).

$I_c(3n)$, $S_c(3n)$: Composite moment of inertia and section modulus of the steel and deck based upon 3 times the modular ratio, "3n", used for computing f_s (Total and Overload) due to long-term composite (superimposed) dead loads (in^4 and in^3).

S_1: Section modulus of one flange plate for lateral flange bending ($in.^3$).

$\wp$: Un-factored non-composite dead load (kips/ft.).

$M\wp$: Un-factored moment due to non-composite dead load (kip-ft).

$s\wp$: Un-factored long-term composite (superimposed) dead load (kips/ft.).

$M_s\wp$: Un-factored moment due to long-term composite (superimposed) dead load (kip-ft.).

$M\text{L}$: Un-factored live load moment (kip-ft.).

M_I: Un-factored moment due to impact (kip-ft).

M_a: Factored design moment (kip-ft.).
$1.3\ [M\wp + M_s\wp + \frac{5}{3}\ (M\text{L} + M_I)]$

M_{b1}: Factored lateral bending moment for flange plate (kip-ft.).

f_1: Factored calculated normal stress at the edge of flange due to lateral bending (ksi).

f_s (Overload): Sum of stresses as computed from the moments below (ksi).
$M\wp + M_s\wp + \frac{5}{3}\ (M\text{L} + M_I)$

f_s (Total): Sum of stresses as computed from the moments below (ksi).
$1.3\ [M\wp + M_s\wp + \frac{5}{3}\ (M\text{L} + M_I)]$

F_{cr} (Overload): Critical average flange stress at overload computed according to the 2003 AASHTO Guide Specifications for Horizontally Curved Steel Girder Highway Bridges Section 9.5 (ksi.).

F_{cr}: Critical average flange stress (smaller of F_{cr1} or F_{cr2} for partially braced flanges and F_y for continuously braced flanges) computed according to the 2003 AASHTO Guide Specifications for Horizontally Curved Steel Girder Highway Bridges (Sections 5.2, 5.3 and 5.4) (ksi).

VR: Maximum L+ impact shear range within span for stud shear connector design (kips).

Note:
$M\text{L}$ and $R\text{L}$ include the effects of centrifugal force and superelevation.

MOMENT TABLE 2
RAMP 1 FLARE
STRUCTURE NO. 016-0724

TYLIN INTERNATIONAL

DESIGNED	-	EKH, JMA
CHECKED	-	AMD,
DRAWN	-	EKH, JMA
CHECKED	-	AMD,
DATE	-	08/02/10

REVISIONS	
NAME	DATE

SHEET NO. 56
137 SHEETS

F.A.I RTE.	SECTION	COUNTY	TOTAL SHEETS	SHEET NO.
55	0711.2R & 1011.1BR	COOK	200	86
		CONTRACT NO. 60L39		
FED. ROAD DIST. NO. 1	ILLINOIS	FED. AID PROJECT		

8/2/2010

p:\01345\beam and bearing fabrication\155flframedtl2.dgn 2:12:39 PM

STATE OF ILLINOIS
DEPARTMENT OF TRANSPORTATION

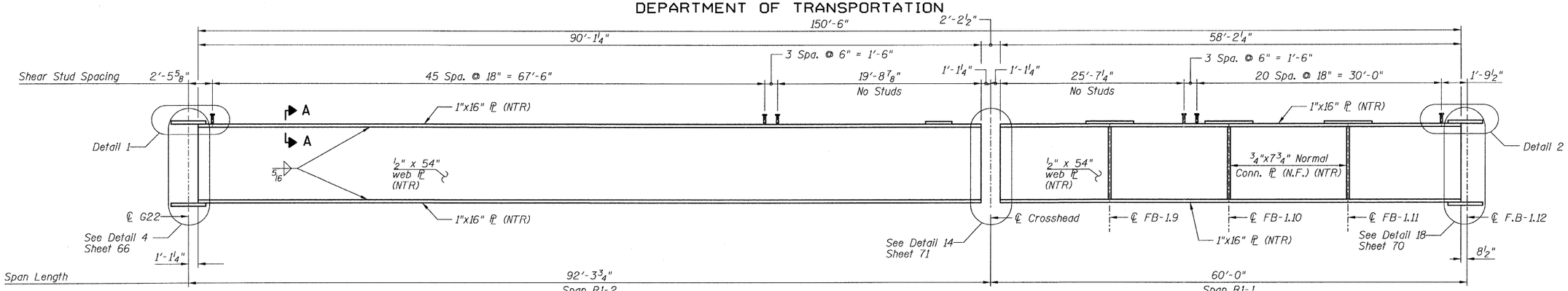

BEAM ELEVATION - BEAMS G1.1
(Looking South)

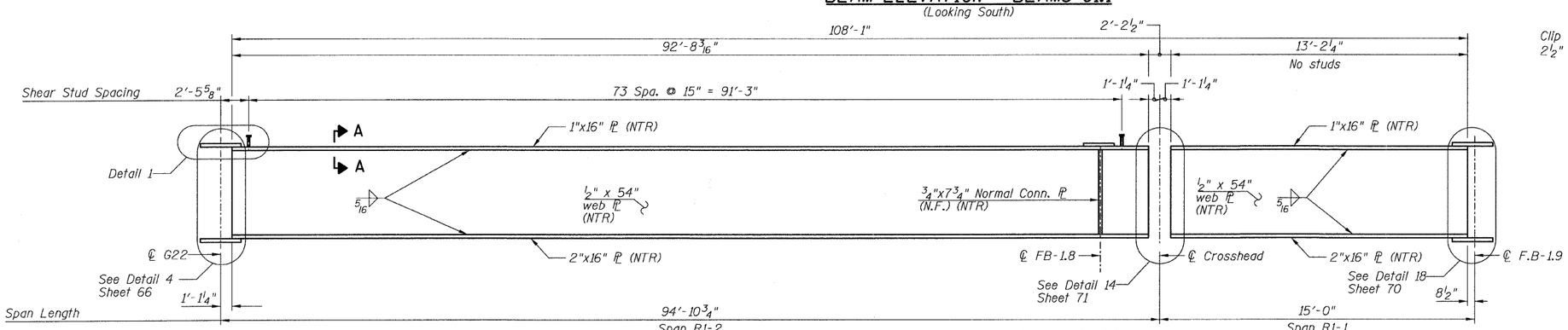

BEAM ELEVATION - BEAMS G1.20
(Looking South)

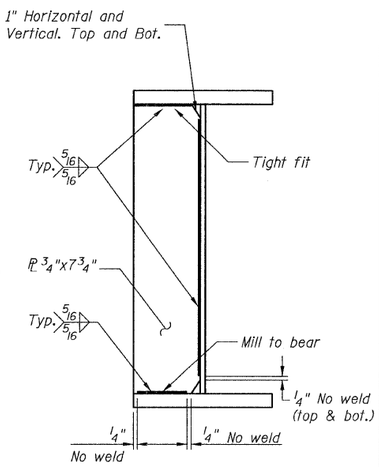

TYPICAL CONN. PL DETAIL
(@ Floor beams)

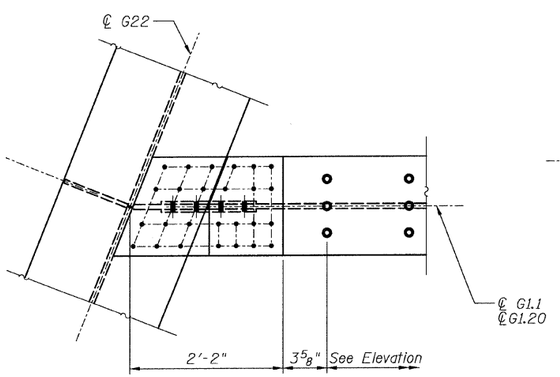

DETAIL 1

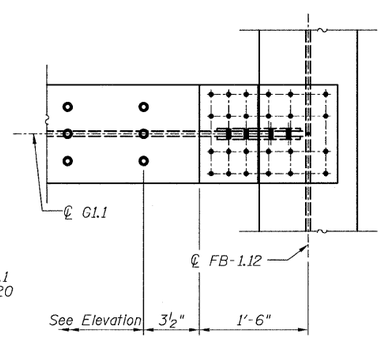

DETAIL 2

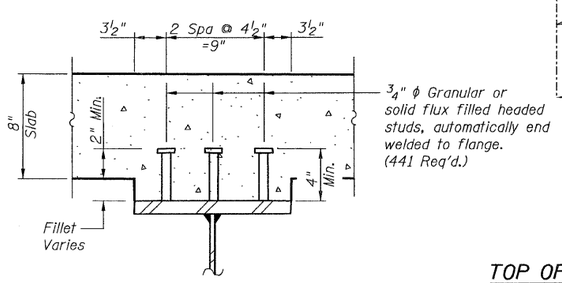

SECTION A-A
Not in contract

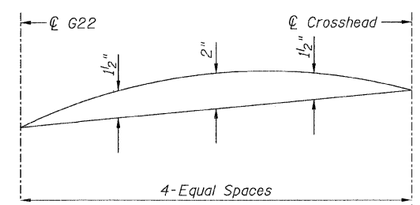

CAMBER DIAGRAMS
(G1.1 & G1.20)

TOP OF WEB ELEVATIONS
(For Fabrication Only)

Location \ Girder	G1.1	G1.20
Centerline G22	626.17	626.27
Centerline Crosshead	624.40	624.50
Centerline F.B.	623.25	624.22

NOTES:

1. All steel shown on this sheet shall conform to the requirements of AASHTO M270 GR 50.
2. Load carrying components designated "NTR" shall conform to the supplemental requirements for Notch Toughness, Zone 2.
3. N.F. denotes Near Face.
4. Girders shall not be cambered for spans R1-1.

GIRDER ELEVATIONS 1
RAMP 1 FLARE
STRUCTURE NO. 016-0724

TYLIN INTERNATIONAL

		REVISIONS	
DESIGNED - EKH, JMA, PK		NAME	DATE
CHECKED - AMD,			
DRAWN - EKH, JMA, PK			
CHECKED - AMD,			
DATE - 08/02/10			

SHEET NO. 57
137 SHEETS

F.A.I RTE.	SECTION	COUNTY	TOTAL SHEETS	SHEET NO.
55	0711.2R & 1011.1BR	COOK	200	87
		CONTRACT NO. 60L39		
FED. ROAD DIST. NO. 1	ILLINOIS	FED. AID PROJECT		

4:41:47 PM
p:\0134\beam and bearing fabrication\55fiframedtl3.dgn
8/13/2010

STATE OF ILLINOIS
DEPARTMENT OF TRANSPORTATION

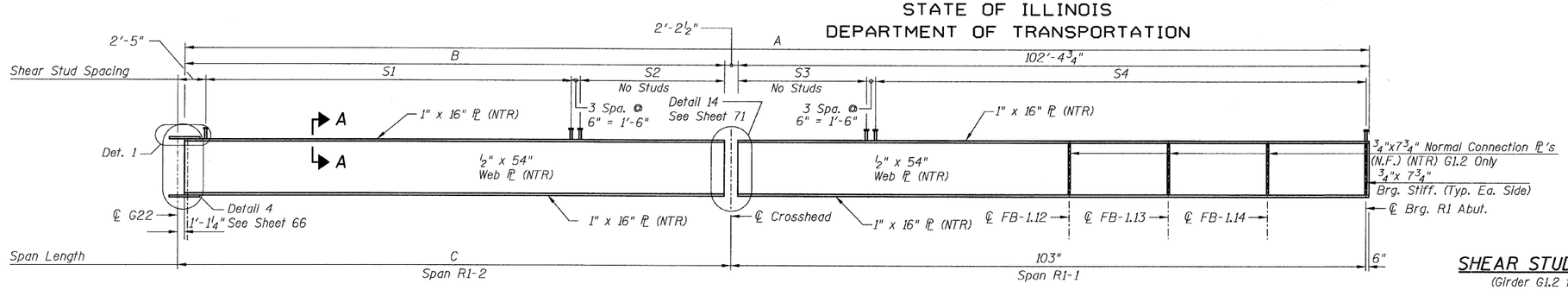

GIRDER ELEVATION - G1.2 THRU G1.7

(Looking South)

GIRDER DIMENSIONS

(Girder G1.2 thru G1.7)

	A	B	C
G1.2	193'-2¾"	87'-6¼"	89'-8¾"
G1.3	190'-7 15/16"	84'-11 5/16"	87'-1 13/16"
G1.4	188'-0 15/16"	82'-4 5/16"	84'-6 13/16"
G1.5	185'-5⅛"	79'-9⅜"	81'-11⅞"
G1.6	182'-10 15/16"	77'-2 1/16"	79'-4 15/16"
G1.7	180'-4"	74'-7½"	76'-10"

SHEAR STUD SPACINGS

(Girder G1.2 thru G1.7)

	S1	S2	S3	S4
G1.2	63 Spa. @ 15" = 78'-9"	5'-11½"	36'-3 5/16"	51 Spa. @ 15" = 63'-9"
G1.3	45 Spa. @ 15" = 56'-3"	25'-10 9/16"	20'-5⅛"	58 Spa. @ 18" = 79'-6"
G1.4	43 Spa. @ 15" = 53'-9"	25'-9 9/16"	20'-5⅛"	58 Spa. @ 18" = 79'-6"
G1.5	41 Spa. @ 15" = 51'-3"	25'-8 5/8"	20'-5⅛"	58 Spa. @ 18" = 79'-6"
G1.6	30 Spa. @ 18" = 45'-0"	29'-4 11/16"	20'-5⅛"	58 Spa. @ 18" = 79'-6"
G1.7	36 Spa. @ 15" = 45'-0"	26'-9¾"	20'-5⅛"	58 Spa. @ 18" = 79'-6"

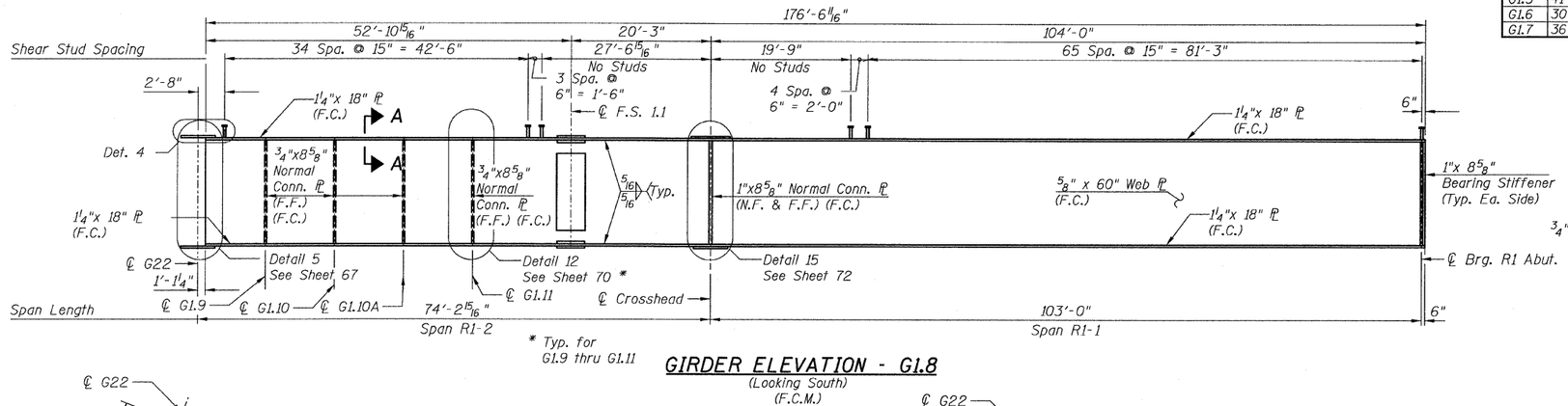

* Typ. for G1.9 thru G1.11

GIRDER ELEVATION - G1.8

(Looking South)
(F.C.M.)

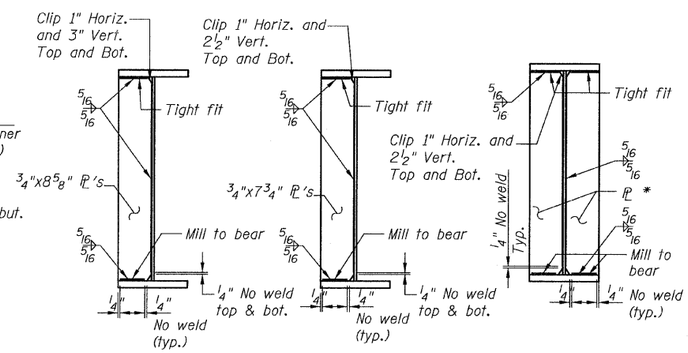

CONN. PL DETAIL G1.8

CONN. PL DETAIL G1.2

BEARING STIFFENER

* ¾" x 7¾" (G1.2 to G1.7)
1" x 8⅝" (G1.8)

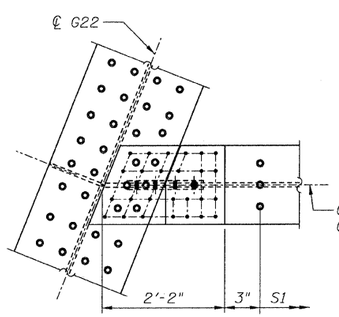

DETAIL 1

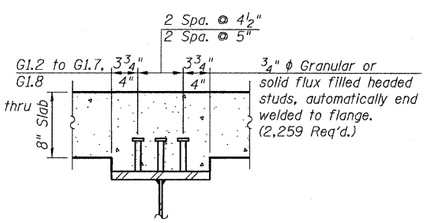

SECTION A-A

Not in contract

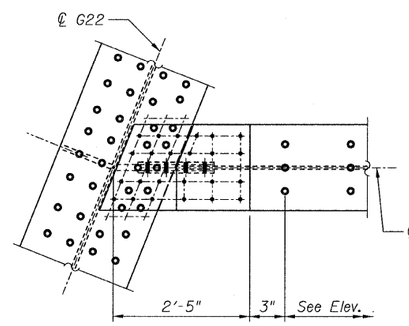

DETAIL 4

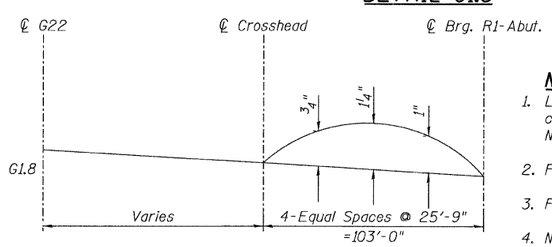

CAMBER DIAGRAM

Girder G1.2 to G1.7

NOTES:

1. Load carrying components designated "NTR" shall conform to the supplemental requirements for Notch Toughness, Zone 2.
2. F.C. denotes Fracture Critical material, AASHTO Zone II.
3. For Field Splice details, See Sheet 73.
4. N.F. denotes Near Face.
5. F.F. denotes Far Face.
6. Girder G1.8 does not require camber.

TOP OF WEB ELEVATIONS

(For Fabrication Only)

Location \ Girder	G1.8
Centerline G22	625.24
Fieldsplice	624.12
Centerline Crosshead	623.70
Centerline Bearing R1-Abut.	621.88

TOP OF WEB ELEVATIONS

(For Fabrication Only)

Location \ Girder	G1.2	G1.3	G1.4	G1.5	G1.6	G1.7
Centerline G22	626.06	625.96	625.84	625.71	625.52	625.39
Centerline Crosshead	624.31	624.21	624.11	624.01	623.92	623.82
Centerline Bearing R1-Abut.	622.49	622.39	622.29	622.19	622.09	621.99

GIRDER ELEVATIONS 2
RAMP 1 FLARE
STRUCTURE NO. 016-0724

T·Y·LIN INTERNATIONAL

		REVISIONS	
DESIGNED	- EKH, JMA, PK	NAME	DATE
CHECKED	- AMD,		
DRAWN	- EKH, JMA, PK		
CHECKED	- AMD,		
DATE	- 08/02/10		

SHEET NO. 58
137 SHEETS

F.A.I RTE.	SECTION	COUNTY	TOTAL SHEETS	SHEET NO.
55	0711.2R & 1011.1BR	COOK	200	88
		CONTRACT NO. 60L39		
FED. ROAD DIST. NO. 1	ILLINOIS	FED. AID PROJECT		

5:55:02 PM
p:\01345\beam and bearing fabrication\155flframeds14.dgn
8/13/2010

STATE OF ILLINOIS
DEPARTMENT OF TRANSPORTATION

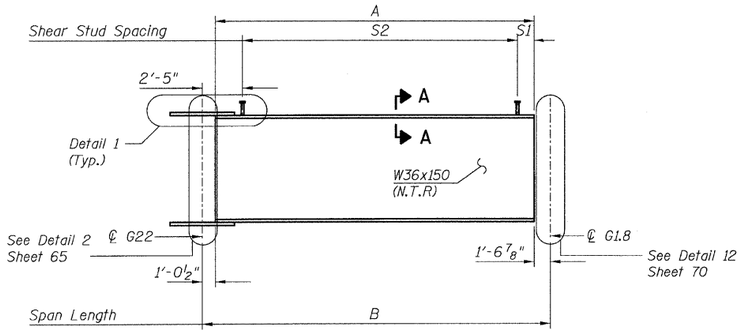

GIRDER ELEVATION - G1.9, G1.10 AND G1.10A

(Looking South)

GIRDER DIMENSIONS

Girder	A	B
G1.9	8'-4 5/8"	10'-9 3/8"
G1.10	19'-1 1/8"	21'-6 5/8"
G1.10A	29'-11 1/4"	32'-4"

SHEAR STUD SPACING

Girder	S1	S2
G1.9	9 5/8"	3 Spa. @ 24" = 6'-0"
G1.10	1'-6 1/8"	8 Spa. @ 24" = 16'-0"
G1.10A	4 1/4"	14 Spa. @ 24" = 28'-0"
G1.11	7 1/2"	77 Spa. @ 6" = 38'-6"

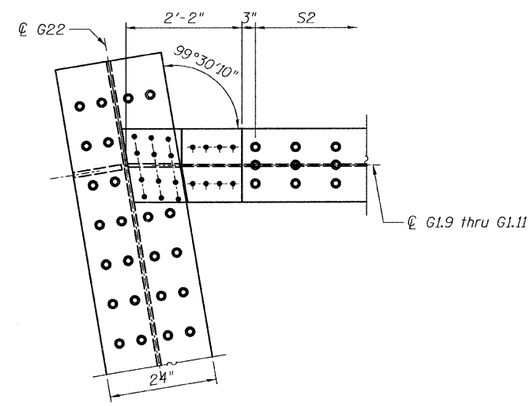

DETAIL 1

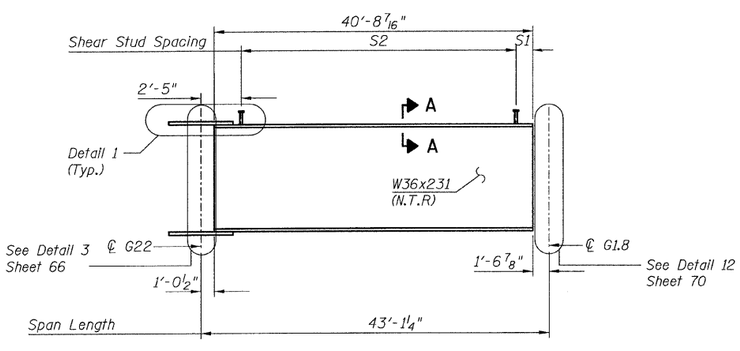

GIRDER ELEVATION - G1.11

(Looking South)

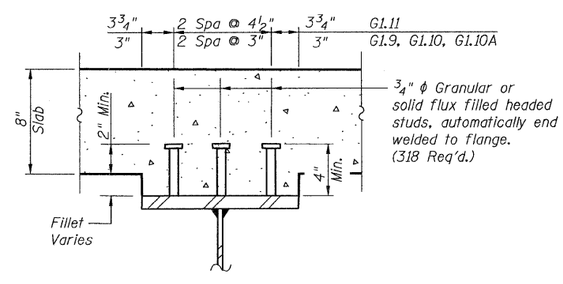

SECTION A-A

Not in contract

TOP OF BEAM ELEVATIONS

(For Fabrication Only)

Location \ Girder	G1.9	G1.10	G1.10A	G1.11
Centerline G1.8	625.15	624.90	624.65	624.41
Centerline G22	625.24	625.13	625.02	624.91

NOTES:

1. All steel shown on this sheet shall conform to the requirements of AASHTO M270 GR 50.
2. Load carrying components designated "NTR" shall conform to the supplemental requirements for Notch Toughness, Zone 2.
3. N.F. - denotes Near Face.

GIRDER ELEVATIONS 3
RAMP 1 FLARE
S.N. 016-0724

TYLIN INTERNATIONAL

		REVISIONS	
DESIGNED - EKH, JMA, PK		NAME	DATE
CHECKED - AMD.			
DRAWN - EKH, JMA, PK			
CHECKED - AMD.			
DATE - 08/02/10			

SHEET NO. 59
137 SHEETS

F.A.I RTE.	SECTION	COUNTY	TOTAL SHEETS	SHEET NO.
55	0711.2R & 1011.1BR	COOK	200	89
		CONTRACT NO. 60L39		
FED. ROAD DIST. NO. 1	ILLINOIS	FED. AID PROJECT		

4:41:49 PM
p:\01345\beam and bearing fabrication\155flframedt15.dgn
8/13/2010

STATE OF ILLINOIS
DEPARTMENT OF TRANSPORTATION

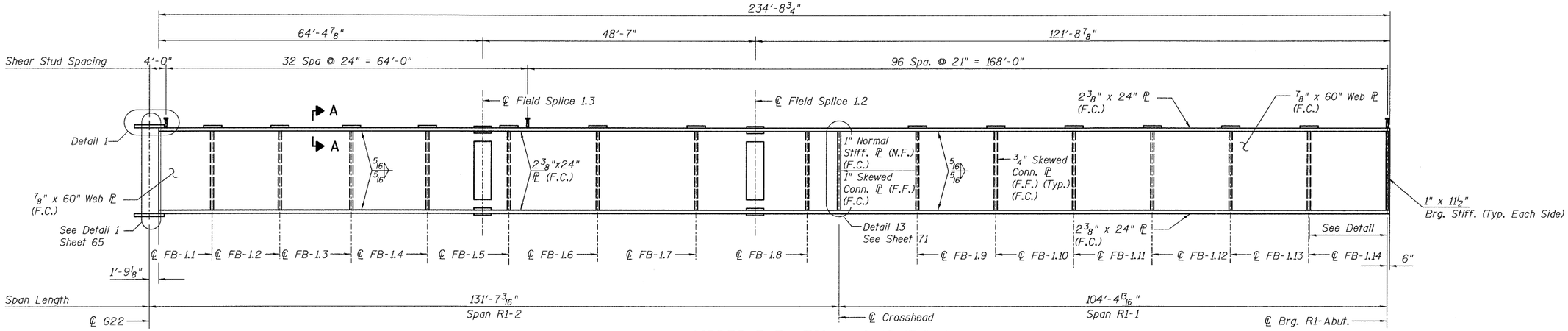

GIRDER ELEVATION - G1.12 (F.C.M)

(Looking South)

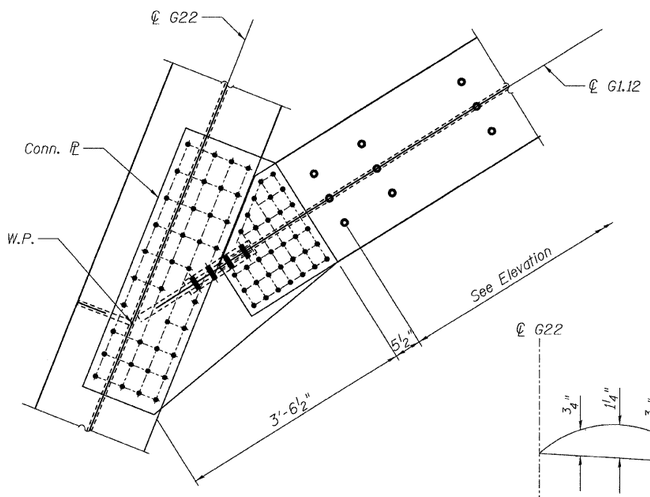

DETAIL 1

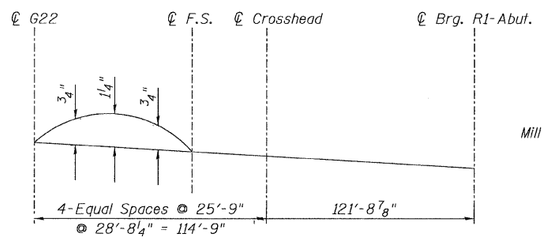

CAMBER DIAGRAM

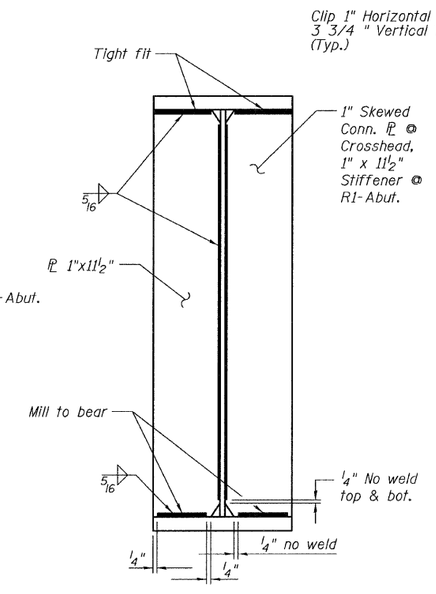

BEARING STIFFNERS

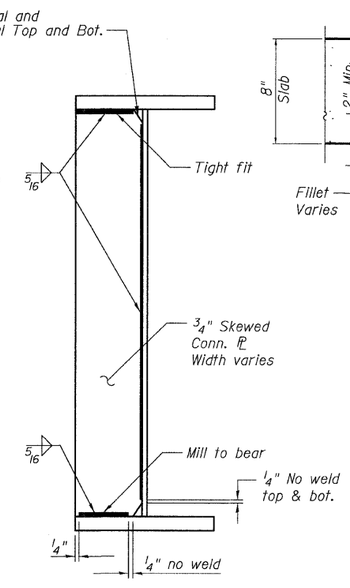

CONNECTION PL

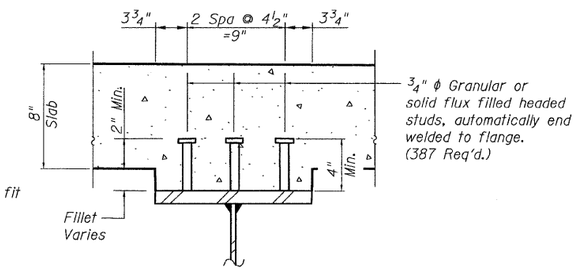

SECTION A-A

Not in contract

TOP OF WEB ELEVATIONS

(For Fabrication Only)

Location \ Girder	G1.12
Centerline G22	627.09
Field Splice 1.2	624.88
Centerline Crosshead	624.51
Centerline Bearing R1-Abut.	622.46

NOTES:

1. All steel shown on this sheet shall conform to the requirementsof AASHTO M270 GR 50.
2. Load carrying components designated "NTR" shall conform to the supplemental requirements for Notch Toughness, Zone 2.
3. For Field Splice details, See Sheet 73.
4. FCM denotes Fracture Critical Member.
5. F.C. denotes Fracture Critical Material, AASHTO Zone II.
6. N.F. denotes Near Face.
7. F.F. denotes Far Face.

GIRDER ELEVATIONS 4
RAMP 1 FLARE
STRUCTURE NO. 016-0724

TYLIN INTERNATIONAL

DESIGNED	- EKH, JMA, PK	REVISIONS	
CHECKED	- AMD,	NAME	DATE
DRAWN	- EKH, JMA, PK		
CHECKED	- AMD,		
DATE	- 08/02/10		

SHEET NO. 60
137 SHEETS

F.A.I RTE.	SECTION	COUNTY	TOTAL SHEETS	SHEET NO.
55	0711.2R & 1011.1BR	COOK	200	90
		CONTRACT NO. 60L39		
FED. ROAD DIST. NO. 1	ILLINOIS	FED. AID PROJECT		

4:41:50 PM
p:\01345\beam and bearing fabrication\55flframeatl6.dgn
8/13/2010

STATE OF ILLINOIS
DEPARTMENT OF TRANSPORTATION

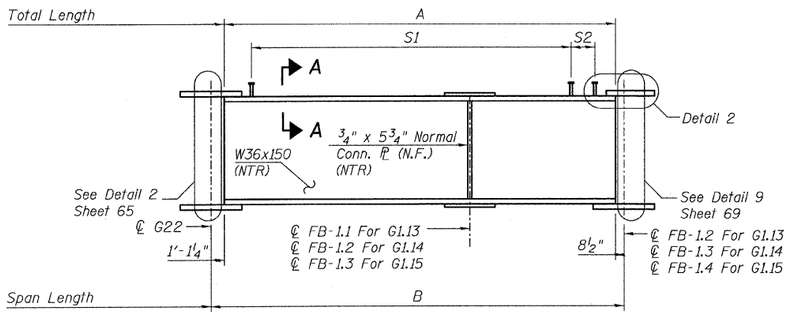

GIRDER ELEVATION - G1.13 THRU G1.15

(Looking South)

GIRDER DIMENSIONS

(Girders G1.13 thru G1.15)

	A	B	S1	S2
G1.13	12'-1 3/4"	13'-11 1/2"		
G1.14	21'-6"	23'-4 1/2"		
G1.15	33'-11 7/8"	35'-9 5/8"		

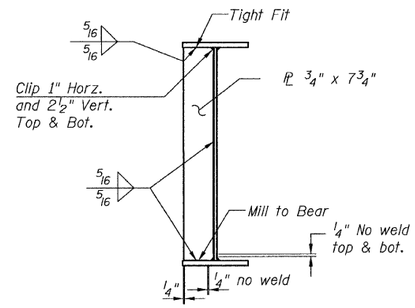

CONN. PL DETAIL G1.16 thru G1.18

(@ Floor beams & @ Cross frames)

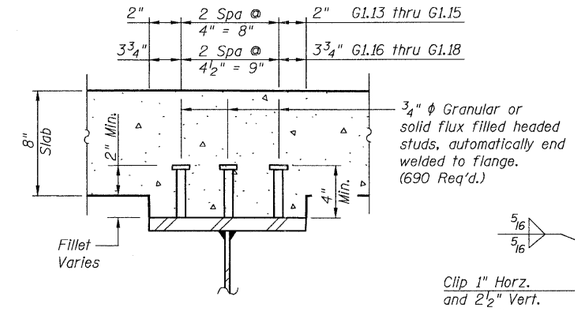

SECTION A-A

Not in contract

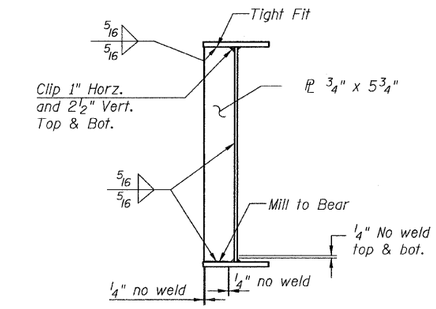

CONN. PL DETAIL G1.13 thru G1.15

(@ Floor beams)

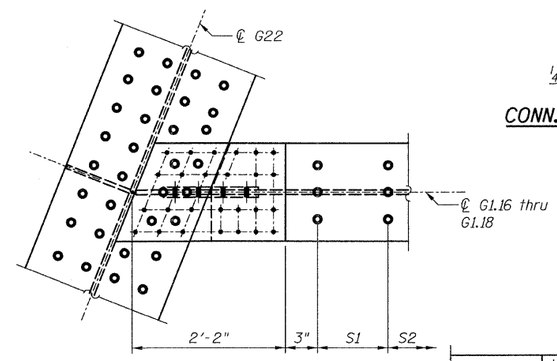

DETAIL 1

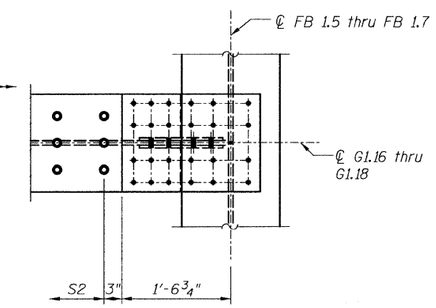

DETAIL 2

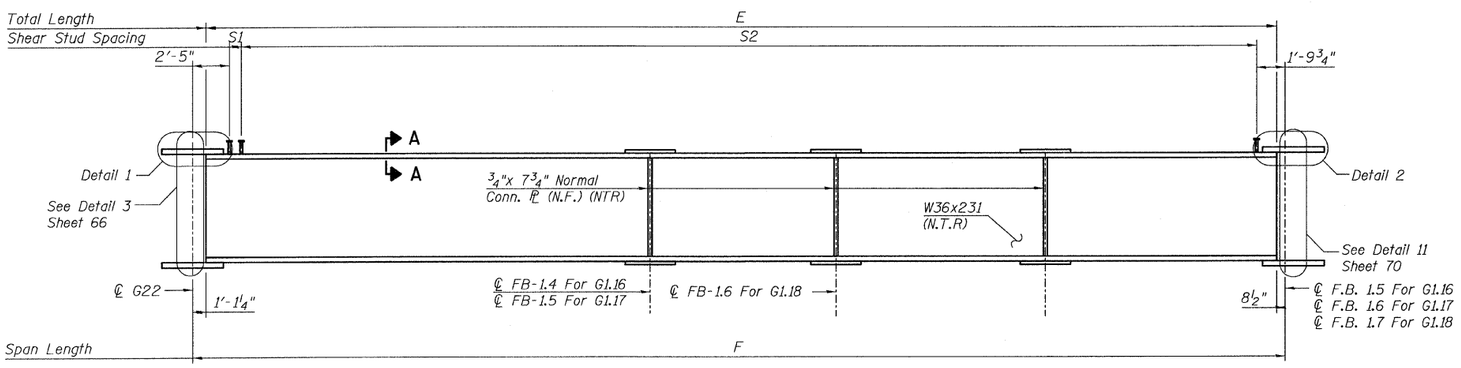

GIRDER ELEVATION - G1.16 THRU G1.18

(Looking South)

NOTES:

1. All steel shown on this sheet shall conform to the requirements of AASHTO M270 GR 50.
2. Load carrying components designated "NTR" shall conform to the supplemental requirements for Notch Toughness, Zone 2.
3. N.F. denotes Near Face.

SHEAR STUD SPACINGS

(Girders G1.16 thru G1.18)

	S1	S2
G1.16	5 7/8"	58 Spa. @ 9" = 43'-6"
G1.17	1 7/8"	75 Spa. @ 9" = 56'-3"
G1.18	6 7/8"	91 Spa. @ 9" = 68'-3"

GIRDER DIMENSIONS

(Girders G1.16 thru G1.18)

	E	F
G1.16	46'-4 7/8"	48'-2 5/8"
G1.17	58'-9 7/8"	60'-7 5/8"
G1.18	71'-2 7/8"	73'-0 5/8"

TOP OF BEAM ELEVATIONS

(For Fabrication Only)

Location \ Girder	G1.13	G1.14	G1.15	G1.16	G1.17	G1.18
Centerline G22	627.07	626.97	626.87	626.76	626.66	626.56
Centerline F.B.						

GIRDER ELEVATIONS 5
RAMP 1 FLARE
STRUCTURE NO. 016-0724

T·Y·LIN INTERNATIONAL

DESIGNED	-	EKH, JMA, PK
CHECKED	-	AMD,
DRAWN	-	EKH, JMA, PK
CHECKED	-	AMD,
DATE	-	08/02/10

REVISIONS	
NAME	DATE

SHEET NO. 61
137 SHEETS

F.A.I RTE.	SECTION	COUNTY	TOTAL SHEETS	SHEET NO.
55	0711.2R & 1011.1BR	COOK	200	91
		CONTRACT NO. 60L39		
FED. ROAD DIST. NO. 1	ILLINOIS	FED. AID PROJECT		

p:\01345\beam and bearing fabrication\55flframedt17.dgn 5:28:10 PM 8/13/2010

\55flframedt17.dgn 8/13/2010 5:28:10 PM

STATE OF ILLINOIS
DEPARTMENT OF TRANSPORTATION

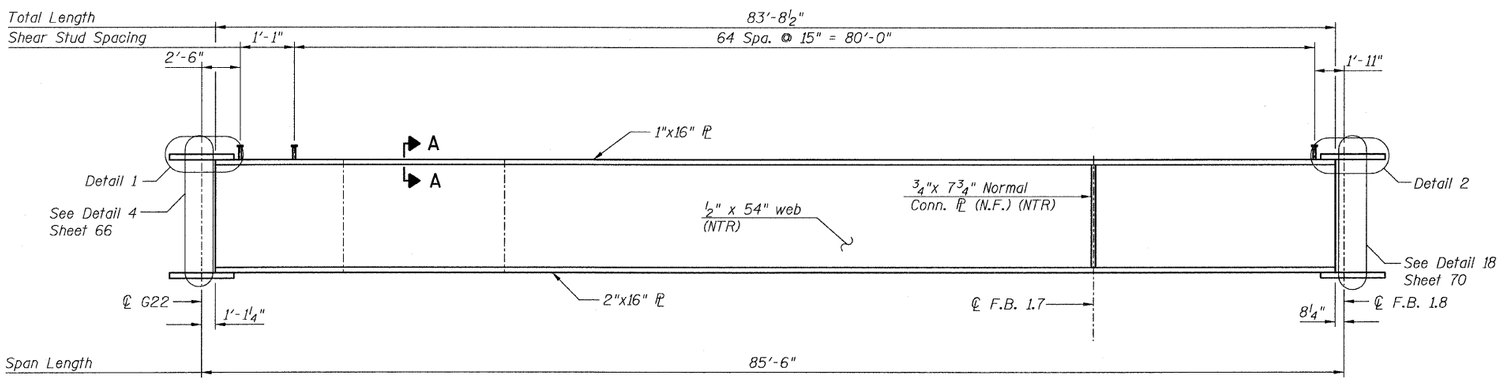

GIRDER ELEVATION - G1.19

(Looking South)

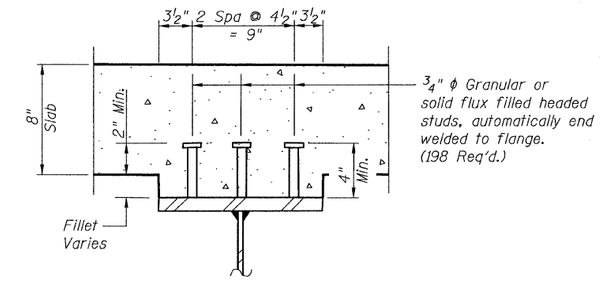

SECTION A-A

Not in contract

TOP OF WEB ELEVATIONS

(For Fabrication Only)

Location	Elevation
Centerline G22	626.35
Centerline F.B. 1.8	

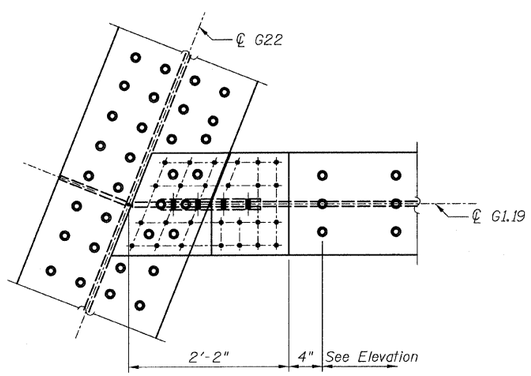

DETAIL 1

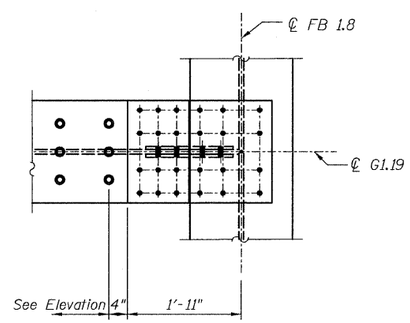

DETAIL 2

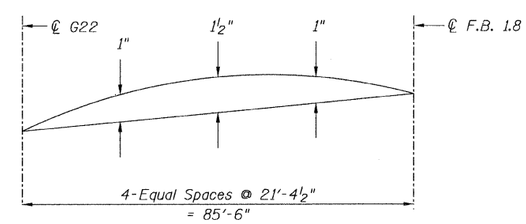

CAMBER DIAGRAMS

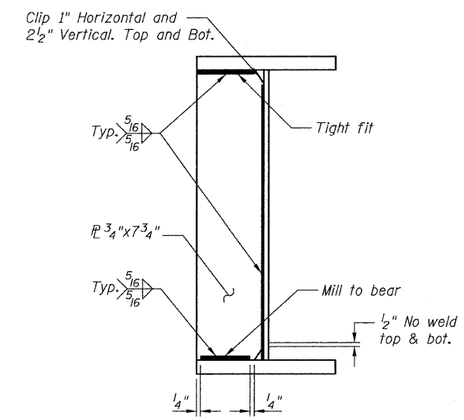

TYPICAL CONN. PL DETAIL

(@ Floor beams)

NOTES:

1. All steel shown on this sheet shall conform to the requirements of AASHTO M270 GR 50.
2. Load carrying components designated "NTR" shall conform to the supplemental requirements for Notch Toughness, Zone 2.
3. N.F. denotes Near Face.

GIRDER ELEVATIONS 6
RAMP 1 FLARE
STRUCTURE NO. 016-0724

TYLIN INTERNATIONAL

DESIGNED	EKH, JMA, PK
CHECKED	AMD,
DRAWN	EKH, JMA, PK
CHECKED	AMD,
DATE	08/02/10

REVISIONS	
NAME	DATE

SHEET NO. 62
137 SHEETS

F.A.I RTE.	SECTION	COUNTY	TOTAL SHEETS	SHEET NO.
55	0711.2R & 1011.1BR	COOK	200	92
		CONTRACT NO. 60L39		
FED. ROAD DIST. NO. 1	ILLINOIS	FED. AID PROJECT		

8/13/2010

p:\01345\beam and bearing fabrication\155flfrmedtl8.dgn

5:28:11 PM

STATE OF ILLINOIS
DEPARTMENT OF TRANSPORTATION

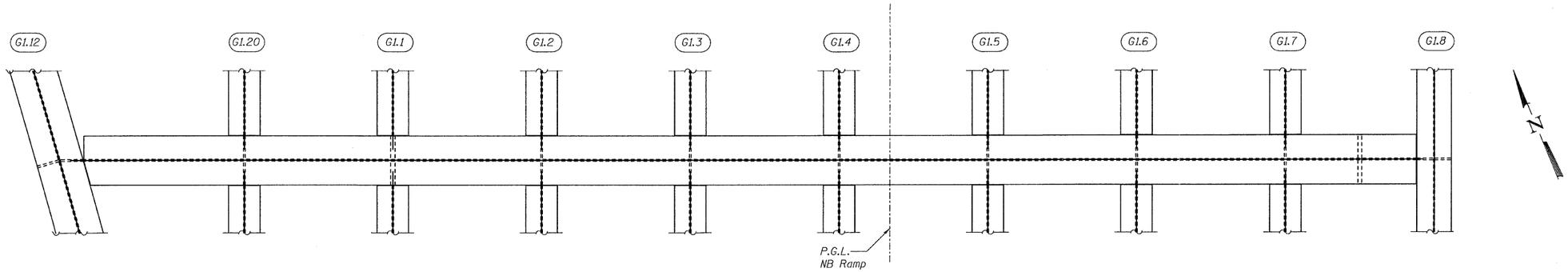

CROSSHEAD PLAN - AT R1 PIER

(Top Connection Plates Not Shown for Clarity)

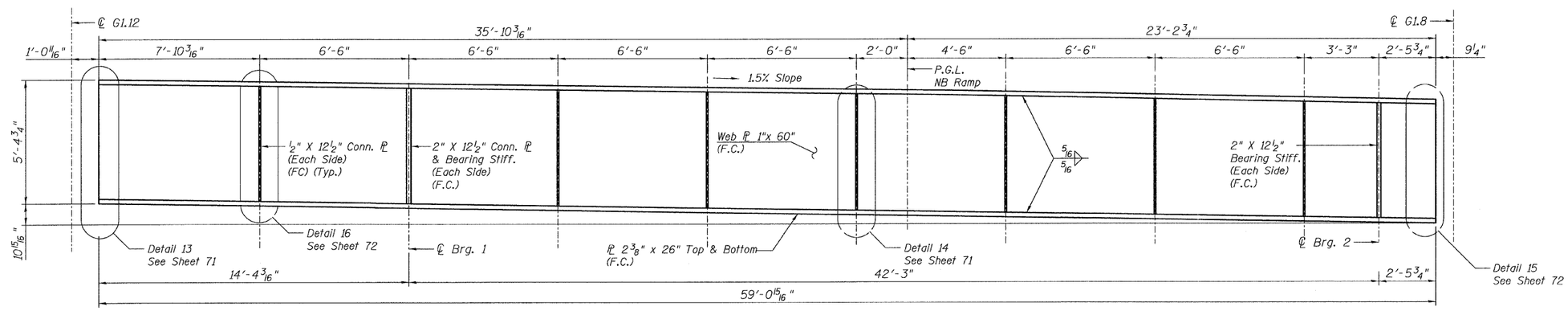

CROSSHEAD ELEVATION - AT R1 PIER (F.C.M.)

(Looking East)

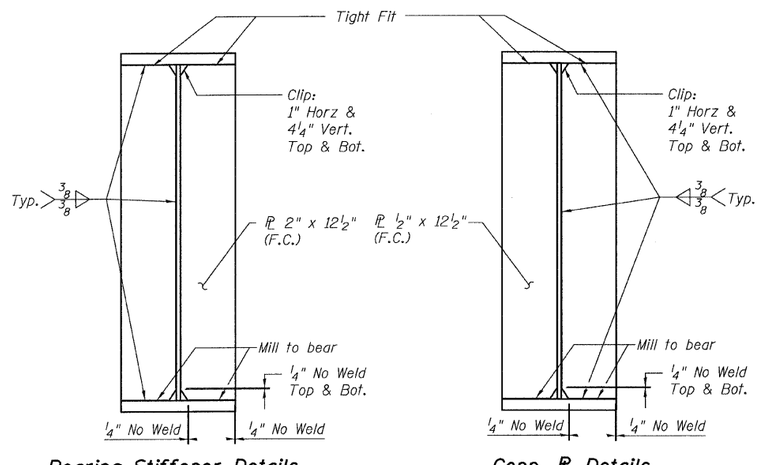

Bearing Stiffener Details

Conn. PL Details

TOP OF WEB ELEVATIONS

(For Fabrication Only)

LOCATION	ELEVATION
℄ Brg. 1	624.28
℄ Brg. 2	623.65

BEARING SEAT ELEVATIONS

(For Information Only)

LOCATION	ELEVATION
℄ Brg. 1	618.13
℄ Brg. 2	617.61

NOTES:

1. All steel shown on this sheet shall conform to the requirements of AASHTO M270 GR 50.
2. Load carrying components designated "NTR" shall conform to the supplemental requirements for Notch Toughness, Zone 2.
3. F.C.M. denotes Fracture Critical Member.
4. F.C. denotes Fracture Critical Material, AASHTO Zone II.
5. Crosshead shall not be cambered.

CROSSHEAD GIRDER DETAILS
RAMP 1 FLARE
STRUCTURE NO. 016-0724

T·Y·LIN INTERNATIONAL

DESIGNED	- EKH, JMA, PK	REVISIONS	
CHECKED	- AMD.	NAME	DATE
DRAWN	- EKH, JMA, PK		
CHECKED	- AMD.		
DATE	- 08/02/10		

SHEET NO. 63
137 SHEETS

F.A.I RTE.	SECTION	COUNTY	TOTAL SHEETS	SHEET NO.
55	0711.2R & 1011.1BR	COOK	200	93
		CONTRACT NO. 60L39		
FED. ROAD DIST. NO. 1	ILLINOIS	FED. AID PROJECT		

8/13/2010

p:\01345\beam and bearing fabrication\i55flrameat19.dgn 4:41:52 PM

STATE OF ILLINOIS
DEPARTMENT OF TRANSPORTATION

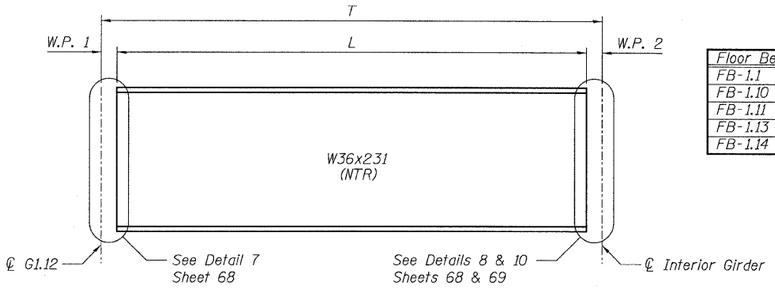

Floor Beam	W.P. 1	W.P. 2	L	T
FB-1.1	1'-2 1/4"	6 1/4"	7'-11 1/2"	9'-8"
FB-1.10	1'-0 1/2"	8 1/4"	6'-6 7/16"	8'-3 3/16"
FB-1.11	1'-0 1/16"	8 1/4"	3'-9 5/8"	5'-6 5/16"
FB-1.13	1'-0 5/16"	8 1/4"	6'-5 5/16"	8'-1 7/8"
FB-1.14	1'-0 1/4"	8 1/4"	5'-4 3/8"	7'-0 7/8"

FLOOR BEAM ELEVATION

(FB-1.1, FB-1.10, FB-1.11, FB-1.13, FB-1.14)

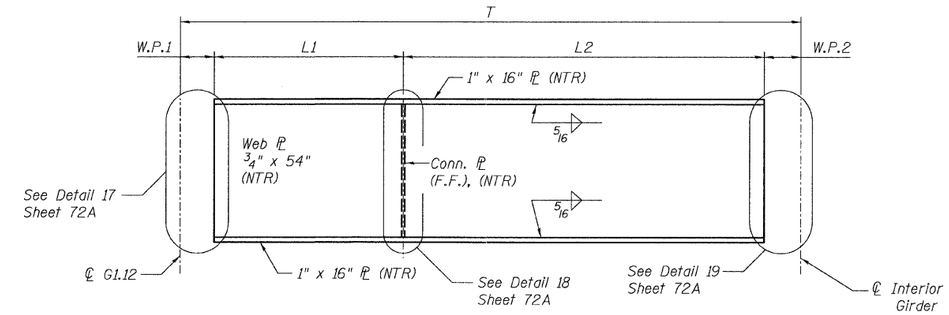

FLOOR BEAM ELEVATION

(FB-1.8, FB-1.9, FB-1.12)
(Looking East)

Floor Beam	W.P.1	W.P.2	L1	L2	T
FB-1.8	1'-0 13/16"	8 1/4"	4'-10"	7'-6 13/16"	12'-4 13/16"
FB-1.9	1'-0 9/16"	8 1/4"	4'-0 1/8"	7'-6 1/2"	11'-6 5/8"
FB-1.12	1'-0 3/8"	8 1/4"	2'-3 9/16"	5'-9 3/4"	9'-9 15/16"

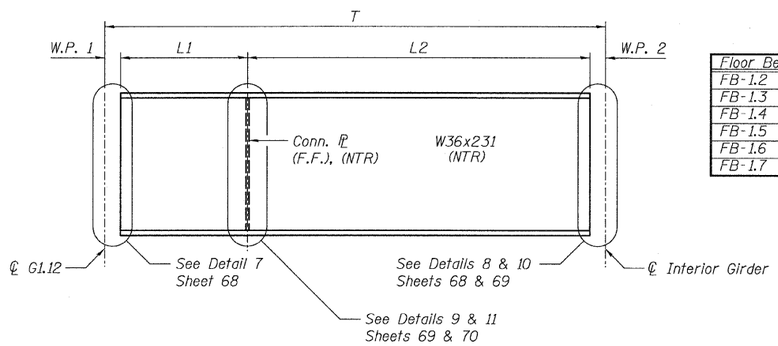

FLOOR BEAM ELEVATION

(FB-1.2 thru FB-1.7)
(Looking East)

Floor Beam	W.P. 1	W.P. 2	L1	L2	T	Conn. PL
FB-1.2	1'-2 1/8"	6 1/4"	3'-2 7/8"	5'-11 3/4"	10'-11"	5/8" x 7 3/4"
FB-1.3	1'-1 7/8"	6 1/4"	3'-2 5/16"	5'-4 3/4"	10'-10 3/16"	5/8" x 7 3/4"
FB-1.4	1'-1 9/16"	8 1/2"	2'-2 3/16"	5'-9 1/2"	9'-9 3/4"	5/8" x 7 3/4"
FB-1.5	1'-1 3/8"	8 1/2"	1'-10 1/2"	5'-9 7/16"	9'-5 13/16"	3/4" x 7 3/4"
FB-1.6	1'-1 1/8"	8 1/2"	2'-2 13/16"	5'-9 1/2"	9'-9 15/16"	3/4" x 7 3/4"
FB-1.7	1'-1"	8 1/4"	3'-2 11/16"	5'-9 3/4"	10'-9 11/16"	3/4" x 7 3/4"

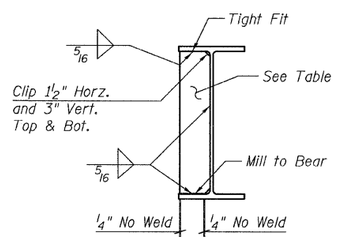

CONN. PL DETAILS

(FB-1.2 to FB-1.7)

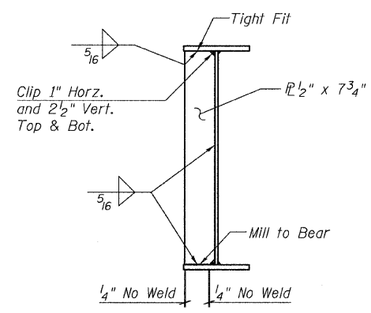

CONN. PL DETAILS

(FB-1.8, FB-1.9, FB-1.12)

NOTES:

1. All steel shown on this sheet shall conform to the requirements of AASHTO M270 GR 50.
2. Load carrying components designated "NTR" shall conform to the supplemental requirements for Notch Toughness, Zone 2.
3. F.F. denotes Far Face.

FLOOR BEAM DETAILS
RAMP 1 FLARE
STRUCTURE NO. 016-0724

TY·LIN INTERNATIONAL	DESIGNED - EKH, JMA	REVISIONS	
	CHECKED - AMD,	NAME	DATE
	DRAWN - EKH, JMA		
	CHECKED - AMD,		
	DATE - 08/02/10		

SHEET NO. 64	F.A.I RTE.	SECTION	COUNTY	TOTAL SHEETS	SHEET NO.
137 SHEETS	55	0711.2R & 1011.1BR	COOK	200	94
			CONTRACT NO. 60L39		
	FED. ROAD DIST. NO. 1	ILLINOIS	FED. AID PROJECT		

4:55:52 PM
p:\01345\beam and bearing fabrication\55flframedt110.dgn
8/5/2010

STATE OF ILLINOIS
DEPARTMENT OF TRANSPORTATION

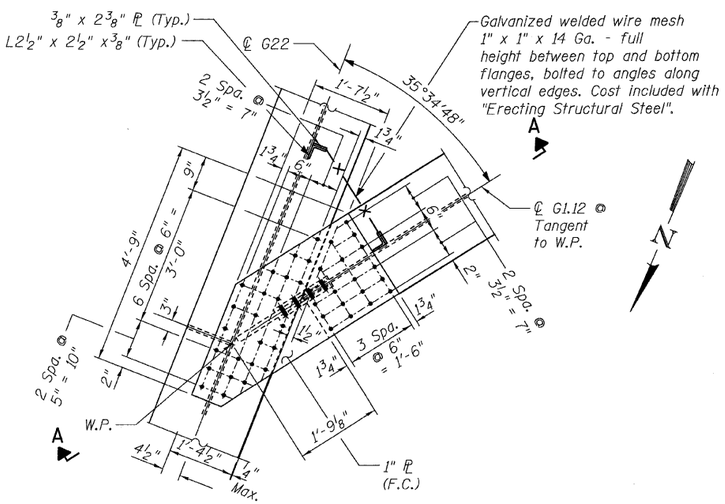

DETAIL 1
(Top Flange)

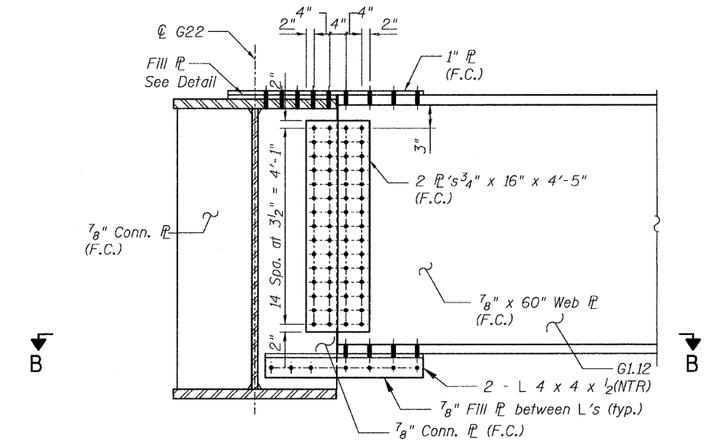

SECTION A-A

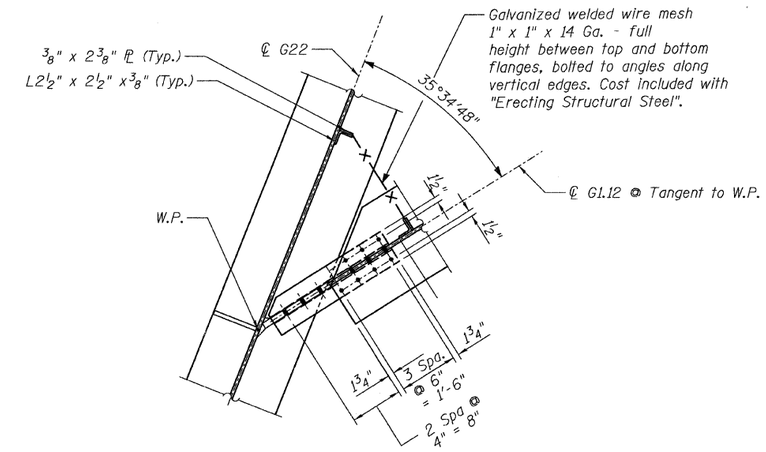

SECTION B-B
(Bottom Flange)

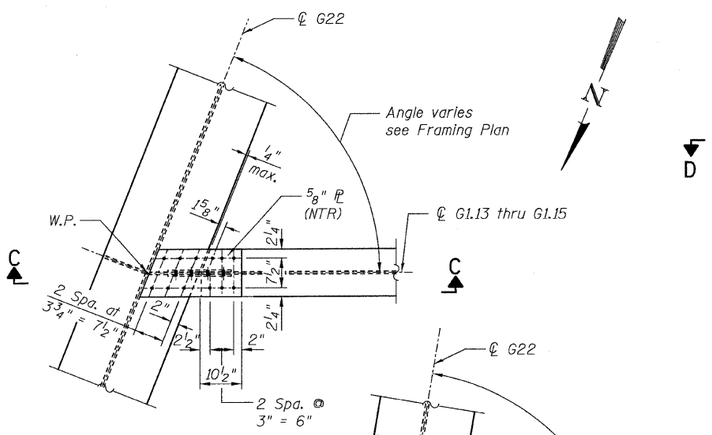

DETAIL 2
(Top Flange)
G1.13 thru G1.15

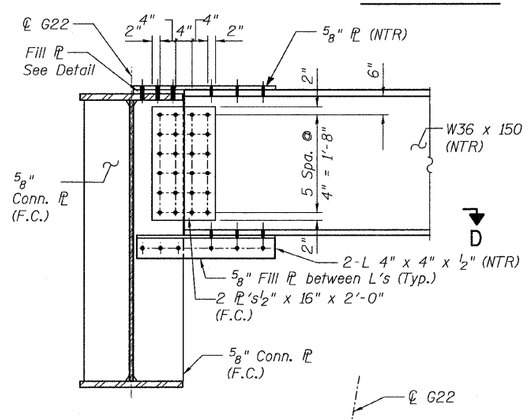

SECTION C-C

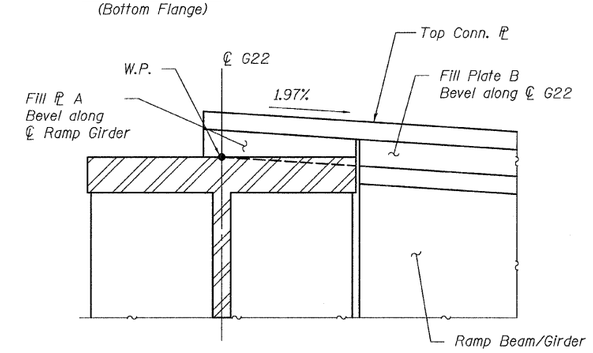

FILL PL DETAIL

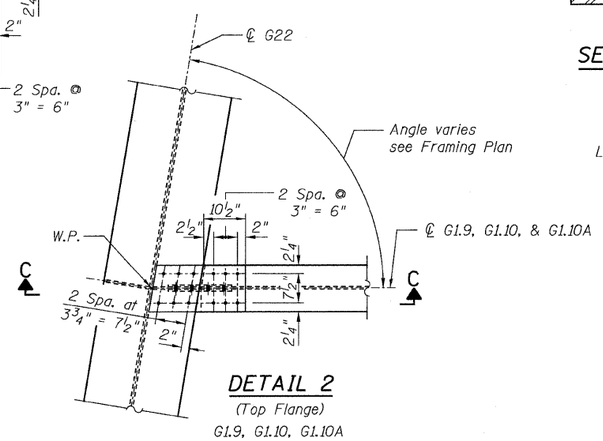

DETAIL 2
(Top Flange)
G1.9, G1.10, G1.10A

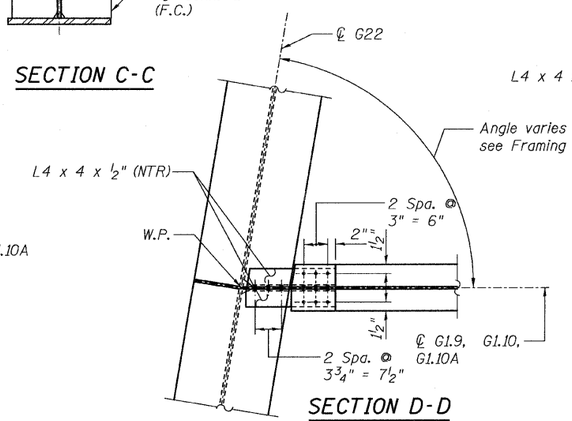

SECTION D-D
(Bottom Flange)
G1.9, G1.10, G1.10A

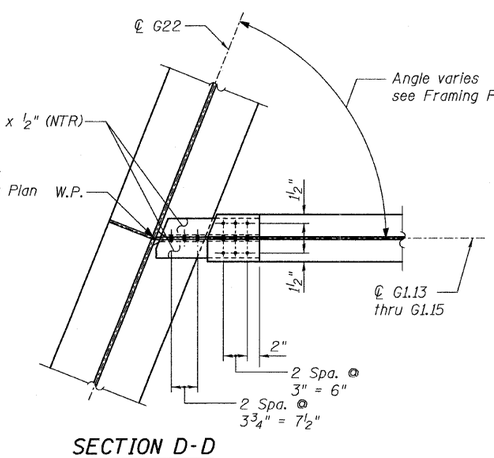

SECTION D-D
(Bottom Flange)
G1.13 thru G1.15

NOTES:

1. All steel shall be AASHTO M270 Grade 50.
2. For Details 1 and 2 locations, see Sheet 41.
3. F.C. - denotes Fracture Critical Material, AASHTO Zone II.
4. Load carrying components designated "NTR" shall conform to the Supplemental Requirements for Notch Toughness, Zone 2.

CONNECTION DETAILS 1&2
RAMP 1 FLARE
STRUCTURE NO. 016-0724

T·Y·LIN INTERNATIONAL

DESIGNED	- EKH, JMA	REVISIONS	
CHECKED	- AMD,	NAME	DATE
DRAWN	- EKH, JMA		
CHECKED	- AMD,		
DATE	- 08/02/10		

SHEET NO. 65
137 SHEETS

F.A.I RTE.	SECTION	COUNTY	TOTAL SHEETS	SHEET NO.
55	0711.2R & 1011.1BR	COOK	200	95
		CONTRACT NO. 60L39		
FED. ROAD DIST. NO. 1	ILLINOIS	FED. AID PROJECT		

8/13/2010

p:\01345\beam and bearing fabrication\55f1f-ramedtl11.dgn 6:17:03 PM

STATE OF ILLINOIS
DEPARTMENT OF TRANSPORTATION

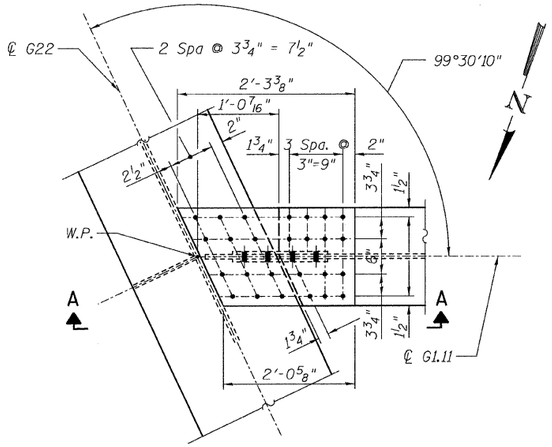

DETAIL 3
(Top Flange @ G1.11)

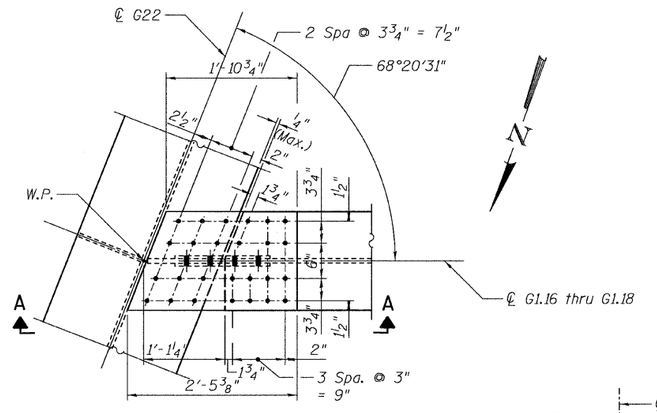

DETAIL 3
(Top Flange @ G1.16 thru G1.18)

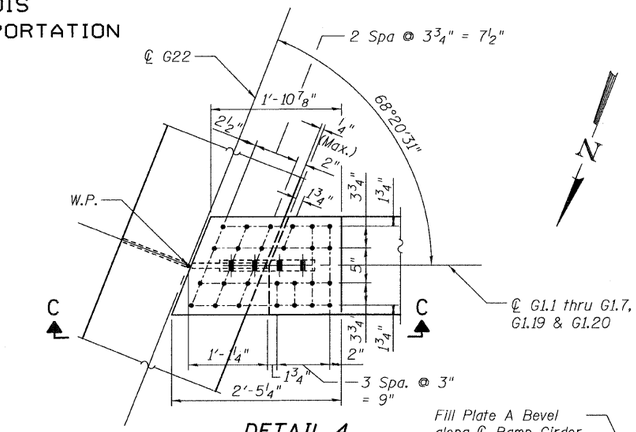

DETAIL 4
(Top Flange)

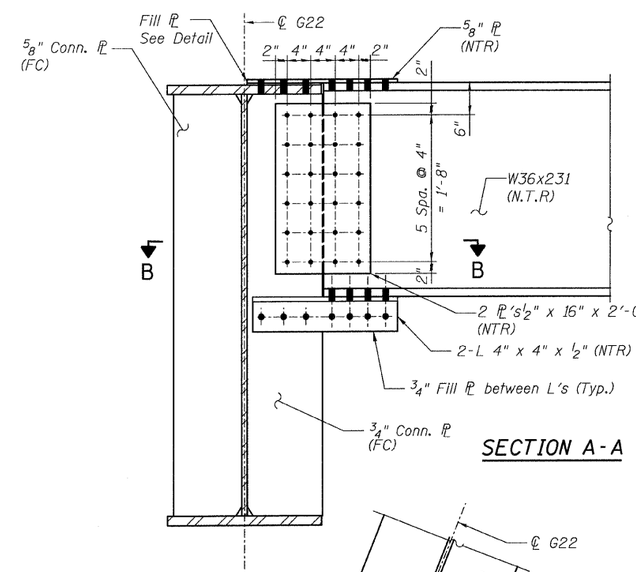

SECTION A-A

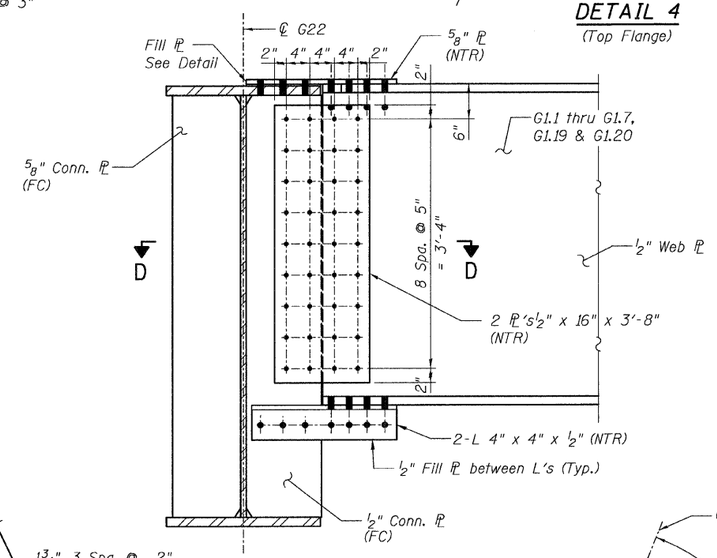

SECTION C-C

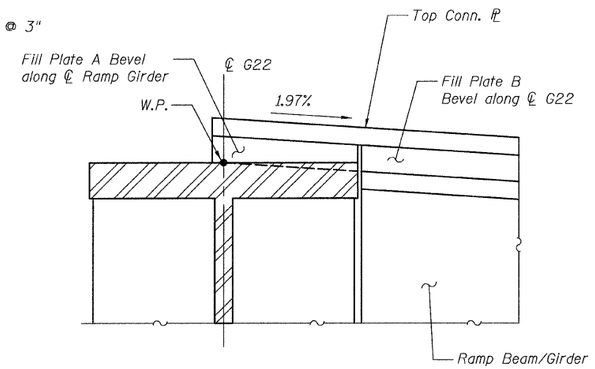

FILL ℙ DETAIL

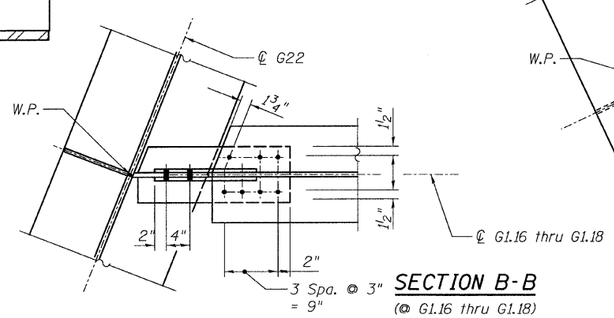

SECTION B-B
(@ G1.16 thru G1.18)

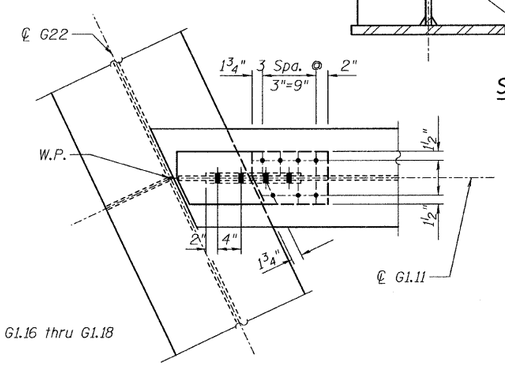

SECTION B-B
(@ G1.11)

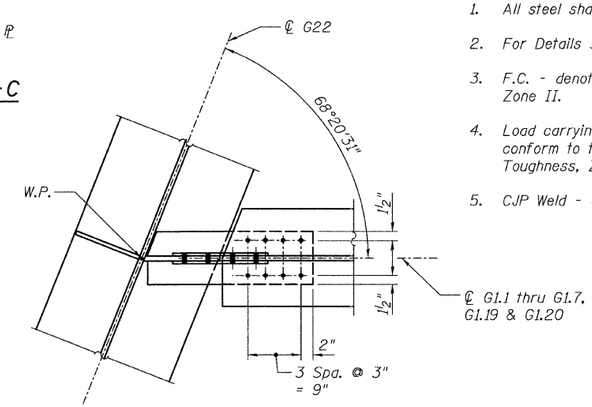

SECTION D-D

NOTES:

1. All steel shall be AASHTO M270 Grade 50
2. For Details 3 and 4 locations, see Sheet 41.
3. F.C. - denotes Fracture Critical Material, AASHTO Zone II.
4. Load carrying components designated "NTR" shall conform to the Supplemental Requirements for Notch Toughness, Zone 2.
5. CJP Weld - denotes Complete Joint Penetration Weld.

CONNECTION DETAILS 3&4
RAMP 1 FLARE
STRUCTURE NO. 016-0724

T·Y·LIN INTERNATIONAL

DESIGNED	EKH, JMA
CHECKED	AMD,
DRAWN	EKH, JMA
CHECKED	AMD,
DATE	08/02/10

REVISIONS	
NAME	DATE

SHEET NO. 66
137 SHEETS

F.A.I RTE.	SECTION	COUNTY	TOTAL SHEETS	SHEET NO.
55	0711.2R & 1011.1BR	COOK	200	96
		CONTRACT NO. 60L39		
FED. ROAD DIST. NO. 1	ILLINOIS	FED. AID PROJECT		

4:41:52 PM
p:\01345\beam and bearing fabrication\55flframeadt112.dgn
8/13/2010

STATE OF ILLINOIS
DEPARTMENT OF TRANSPORTATION

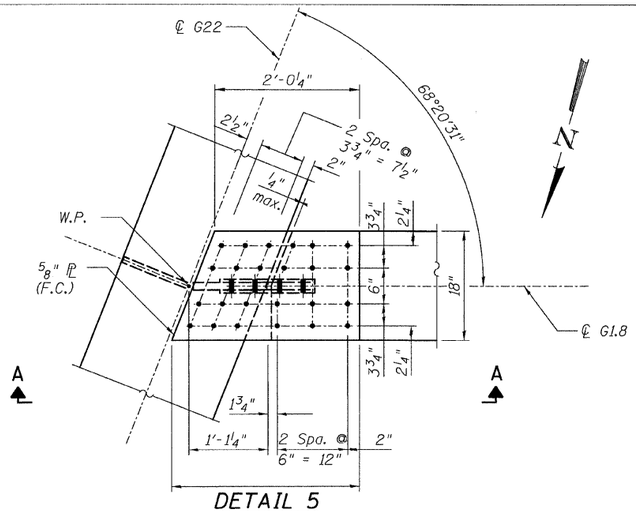

DETAIL 5
(Top Flange)

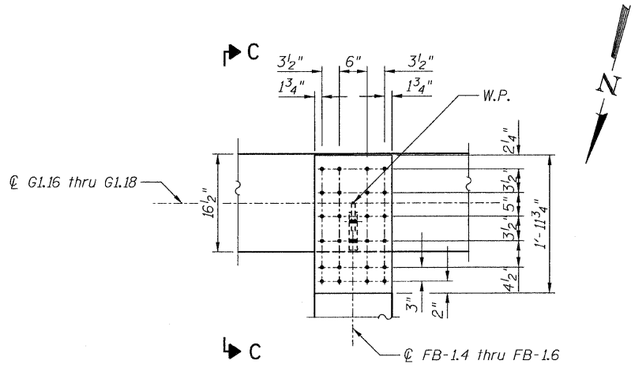

DETAIL 6
(Top Flange)
(Bot. Flange Similar)

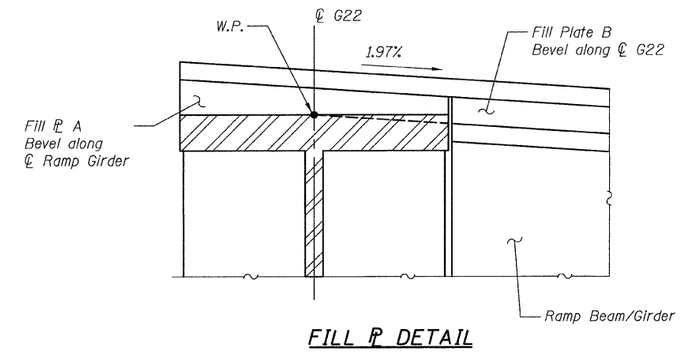

FILL PL DETAIL

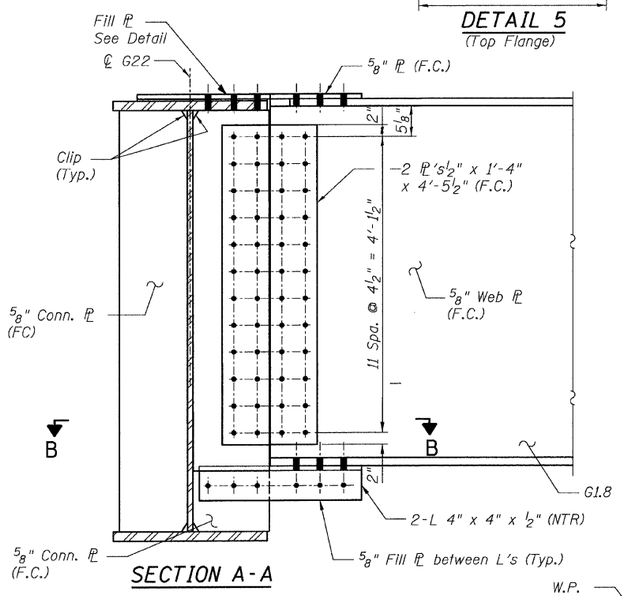

SECTION A-A

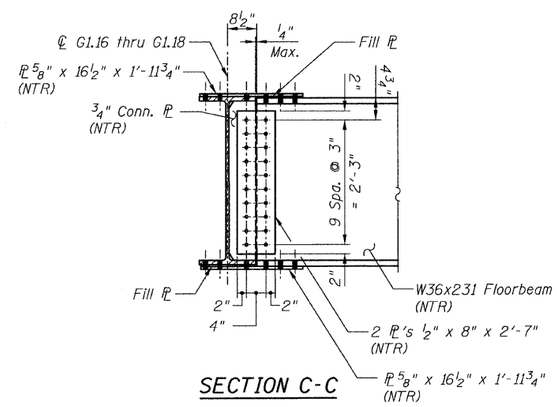

SECTION C-C

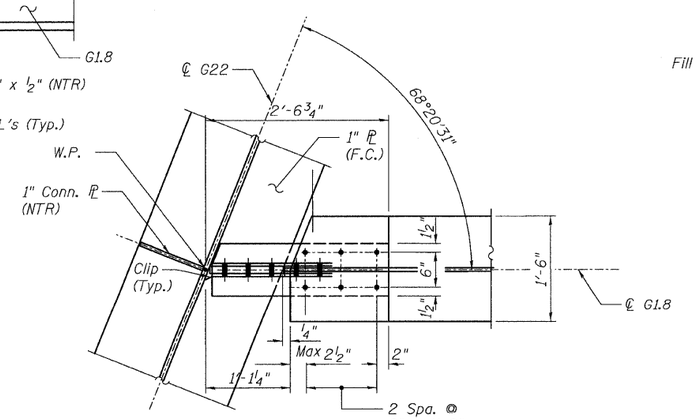

SECTION B-B
(Bottom Flange)

NOTES:

1. All steel shall be AASHTO M270 Grade 50.
2. For Details 5 and 6 locations, see Sheet 41.
3. F.C. - denotes Fracture Critical Material, AASHTO Zone II.
4. Load carrying components designated "NTR" shall conform to the Supplemental Requirements for Notch Toughness, Zone 2.

CONNECTION DETAILS 5&6
RAMP 1 FLARE
STRUCTURE NO. 016-0724

TYLIN INTERNATIONAL

DESIGNED	EKH, JMA
CHECKED	AMD,
DRAWN	EKH, JMA
CHECKED	AMD,
DATE	08/02/10

REVISIONS	
NAME	DATE

SHEET NO. 67
137 SHEETS

F.A.I RTE.	SECTION	COUNTY	TOTAL SHEETS	SHEET NO.
55	0711.2R & 1011.1BR	COOK	200	97
		CONTRACT NO. 60L39		
FED. ROAD DIST. NO. 1	ILLINOIS	FED. AID PROJECT		

p:\01345\beam and bearing fabrication\i55flframedtl13.dgn 4:41:53 PM 8/13/2010

STATE OF ILLINOIS
DEPARTMENT OF TRANSPORTATION

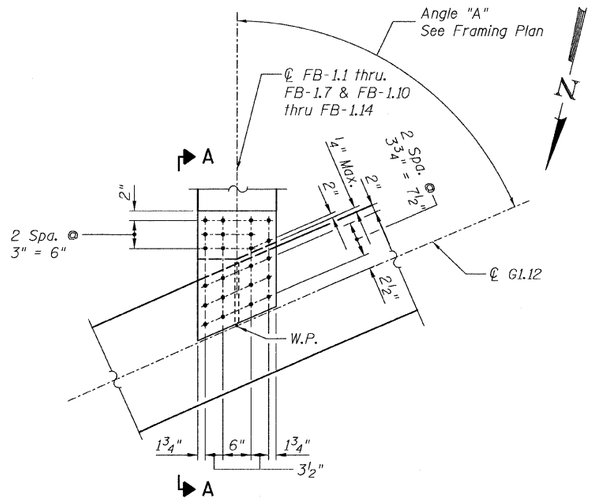

DETAIL 7
(Top Flange)

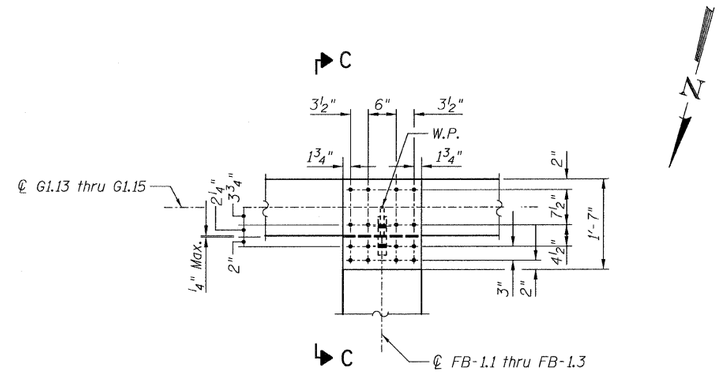

DETAIL 8
(Top Flange)
(Bot. Flange Similar)

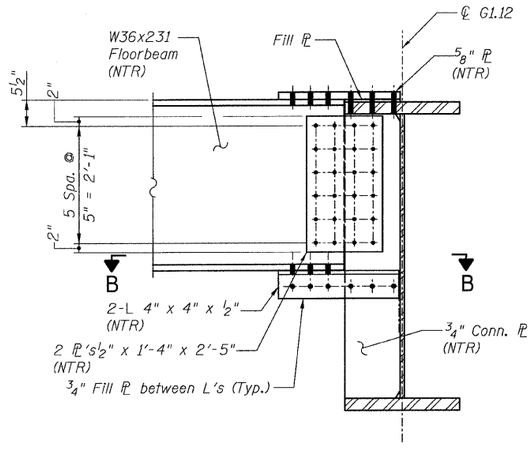

SECTION A-A

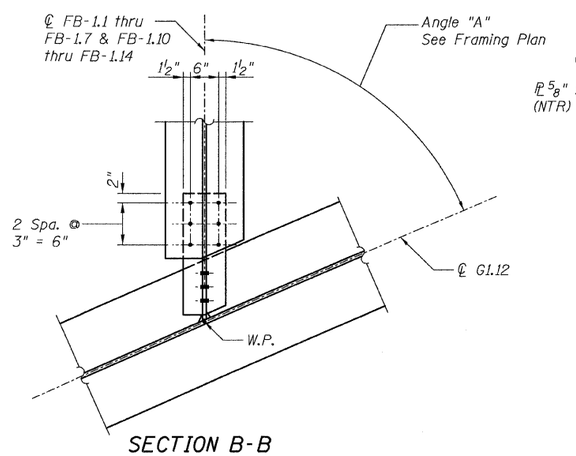

SECTION B-B
(Bottom Flange)

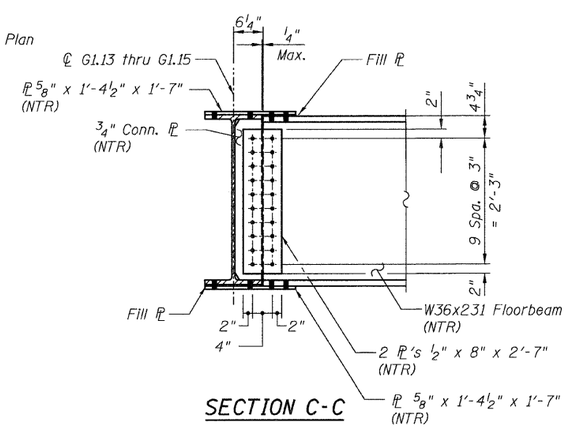

SECTION C-C

NOTES:

1. All steel shall be AASHTO M270 Grade 50.
2. For Details 7 and 8 locations, see Sheet 41.
3. Load carrying components designated "NTR" shall conform to the Supplemental Requirements for Notch Toughness, Zone 2.
4. CJP Weld - denotes Complete Joint Penetration Weld.

CONNECTION DETAILS 7&8
RAMP 1 FLARE
STRUCTURE NO. 016-0724

TY·LIN INTERNATIONAL

DESIGNED	- EKH, JMA
CHECKED	- AMD.
DRAWN	- EKH, JMA
CHECKED	- AMD.
DATE	- 08/02/10

REVISIONS	
NAME	DATE

SHEET NO. 68
137 SHEETS

F.A.I RTE.	SECTION	COUNTY	TOTAL SHEETS	SHEET NO.
55	0711.2R & 1011.1BR	COOK	200	98
		CONTRACT NO. 60L39		
FED. ROAD DIST. NO. 1	ILLINOIS	FED. AID PROJECT		

8/13/2010

p:\01345\beam and bearing fabrication\165fiframedtl14.dgn 4:41:54 PM

\\PWdfiframedtl14.dgn 8/13/2010 4:41:54 PM

STATE OF ILLINOIS
DEPARTMENT OF TRANSPORTATION

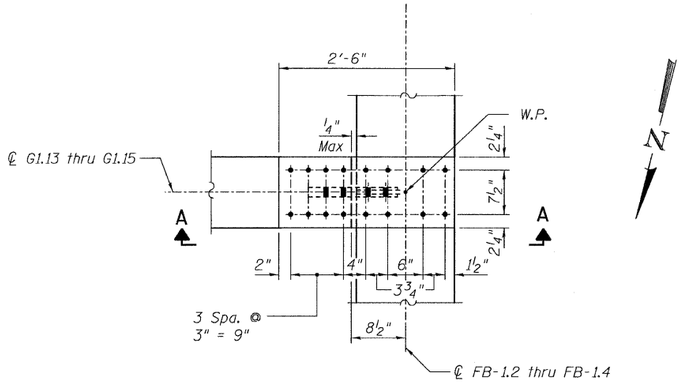

DETAIL 9

(Top Flange)
(Bottom Flange Similar)

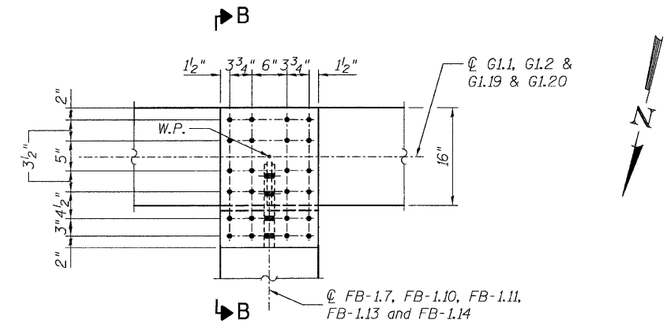

DETAIL 10

(Top Flange)

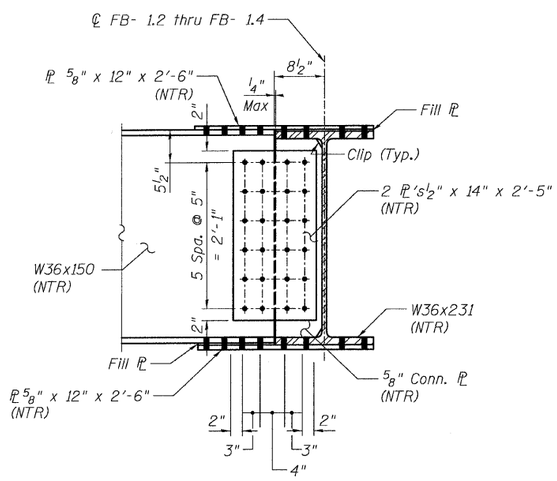

SECTION A-A

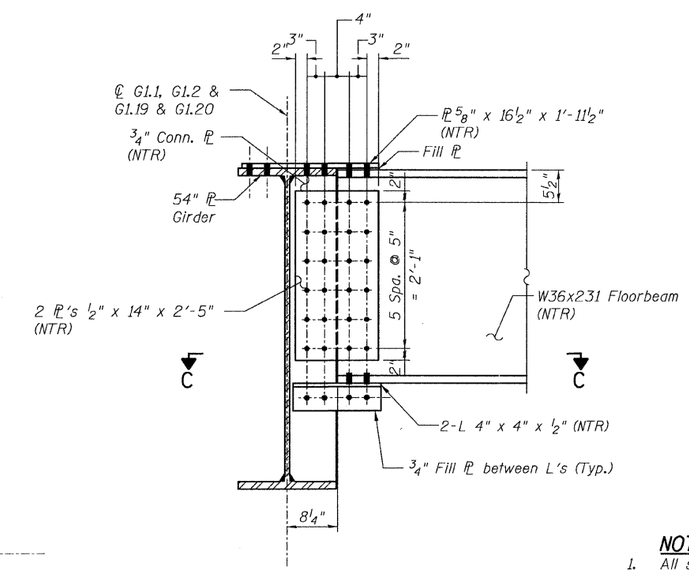

SECTION B-B

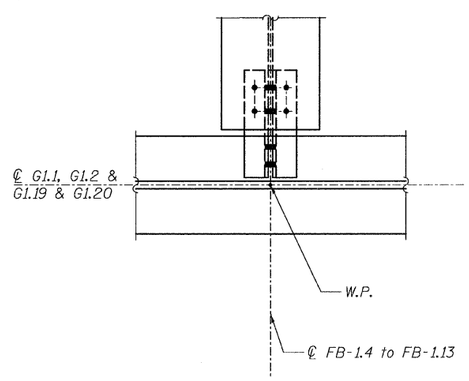

SECTION C-C

NOTES:

1. All steel shall be AASHTO M270 Grade 50.
2. For Details 9 and 10 locations, see Sheet 41.
3. Load carrying components designated "NTR" shall conform to the Supplemental Requirements for Notch Toughness, Zone 2.

CONNECTION DETAILS 9&10
RAMP 1 FLARE
STRUCTURE NO. 016-0724

T·Y·LIN INTERNATIONAL

DESIGNED	- EKH, JMA	REVISIONS	
CHECKED	- AMD,	NAME	DATE
DRAWN	- EKH, JMA		
CHECKED	- AMD,		
DATE	- 08/02/10		

SHEET NO. 69
137 SHEETS

F.A.I RTE.	SECTION	COUNTY	TOTAL SHEETS	SHEET NO.
55	0711.2R & 1011.1BR	COOK	200	99
		CONTRACT NO. 60L39		
FED. ROAD DIST. NO. 1	ILLINOIS	FED. AID PROJECT		

4:41:55 PM
pi:\01345\beam and bearing fabrication\55f1framed115.dgn
8/13/2010

STATE OF ILLINOIS
DEPARTMENT OF TRANSPORTATION

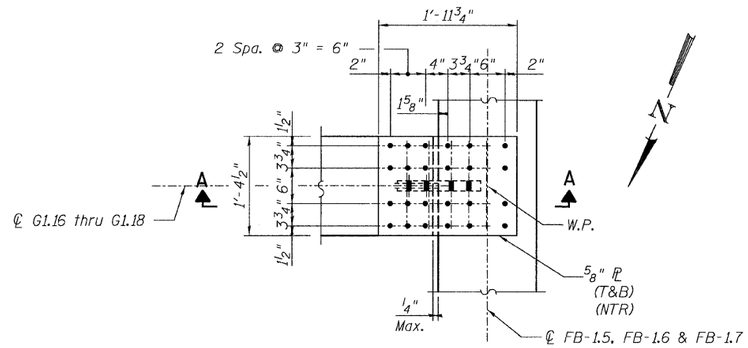

DETAIL 11

(Top Flange)
(Bottom flange is similar.)

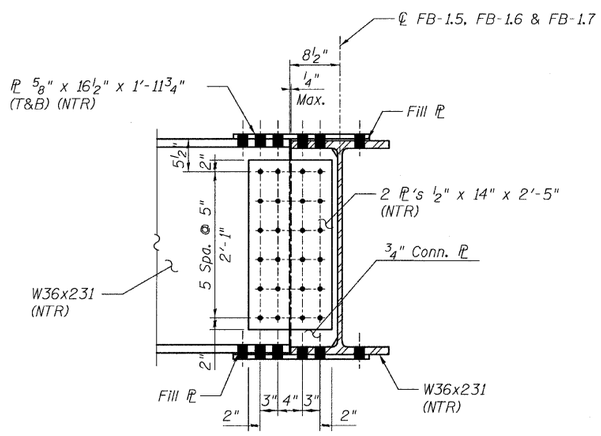

SECTION A-A

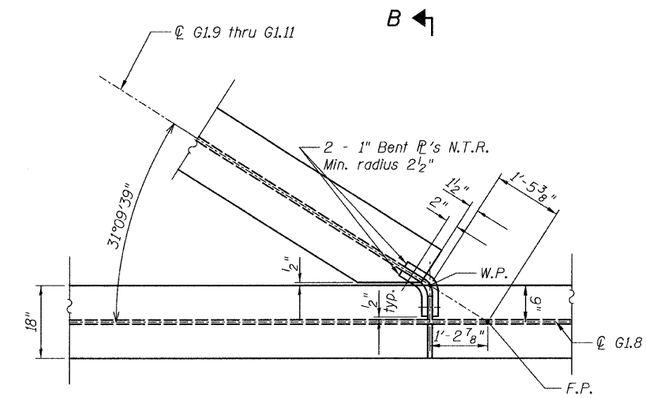

DETAIL 12

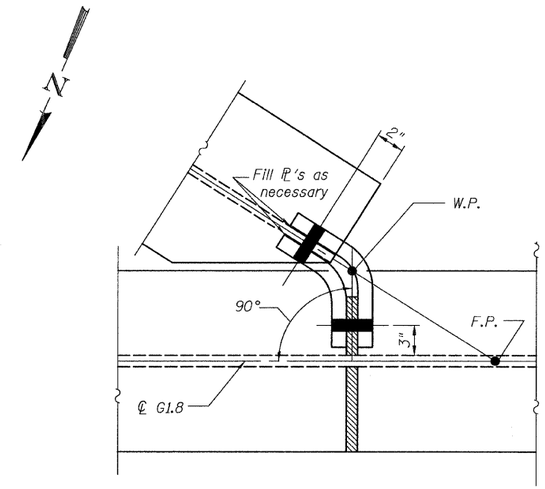

PLAN-FRAMED CONNECTION

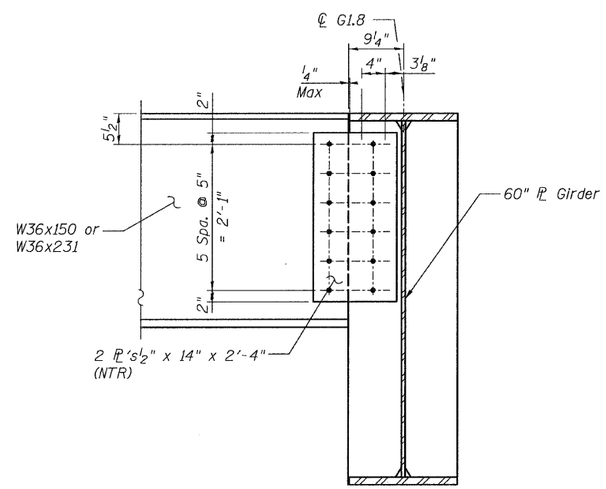

SECTION B-B

NOTES:

1. All steel shall be AASHTO M270 Grade 50.
2. For Details 11 and 12 locations, see Sheet 41.
3. F.C. - denotes Fracture Critical Material, AASHTO Zone II.
4. Load carrying components designated "NTR" shall conform to the Supplemental Requirements for Notch Toughness, Zone 2.

CONNECTION DETAILS 11&12
RAMP 1 FLARE
STRUCTURE NO. 016-0724

T·Y·LIN INTERNATIONAL

DESIGNED	-	EKH, JMA
CHECKED	-	AMD,
DRAWN	-	EKH, JMA
CHECKED	-	AMD,
DATE	-	08/02/10

REVISIONS	
NAME	DATE

SHEET NO. 70
137 SHEETS

F.A.I RTE.	SECTION	COUNTY	TOTAL SHEETS	SHEET NO.
55	0711.2R & 1011.1BR	COOK	200	100
		CONTRACT NO. 60L39		
FED. ROAD DIST. NO. 1	ILLINOIS	FED. AID PROJECT		

8/13/2010

p:\01345\beam and bearing fabrication\55fiframedt116.dgn 5:28:12 PM

\\RFiles\ech116.dgn 8/13/2010 5:28:13 PM