STATE OF ILLINOIS
DEPARTMENT OF TRANSPORTATION

## BENCH MARK:

TBM #1 - Elev. 689.00 Top of Brass Survey Monument located at the west edge of the LaGrange Road SB Pavement, 600 feet North of SW Highway Bridge.

## EXISTING STRUCTURE:

89'-3" Simple Span Steel Through Girder R.R. Bridge, Constructed in 1940 for the Wabash Railway Company, inventoried as Bridge No. 1043A. Substructure consists of Concrete Cantilever Type Abutments on Timber Piles. Bridge is Presently Maintained by Metra. Structure No. 016-0345. No Salvage.

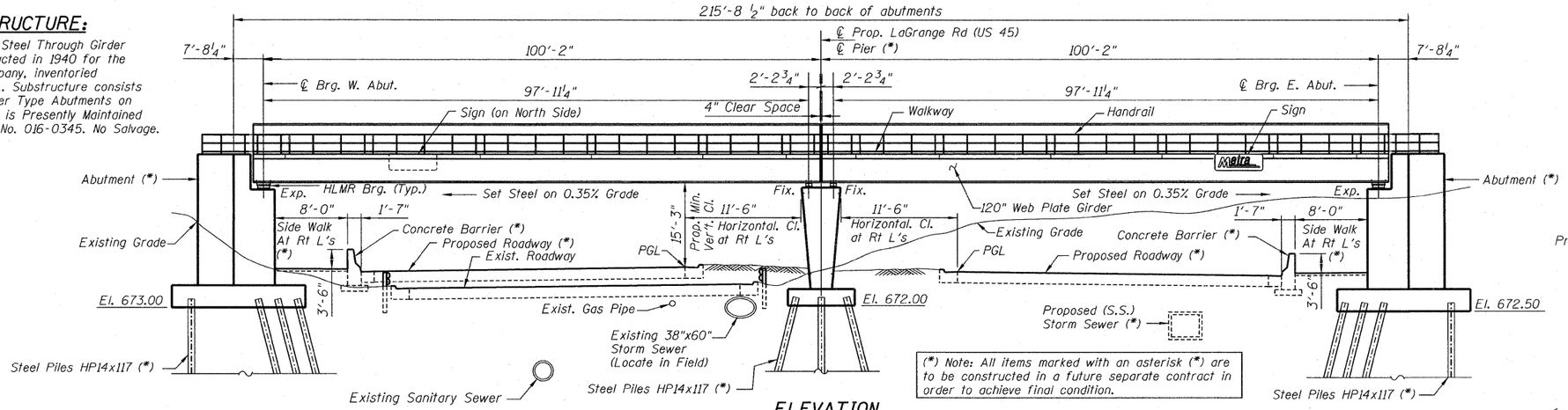


(*) Note: All items marked with an asterisk (*) are to be constructed in a future separate contract in order to achieve final condition.

## ELEVATION

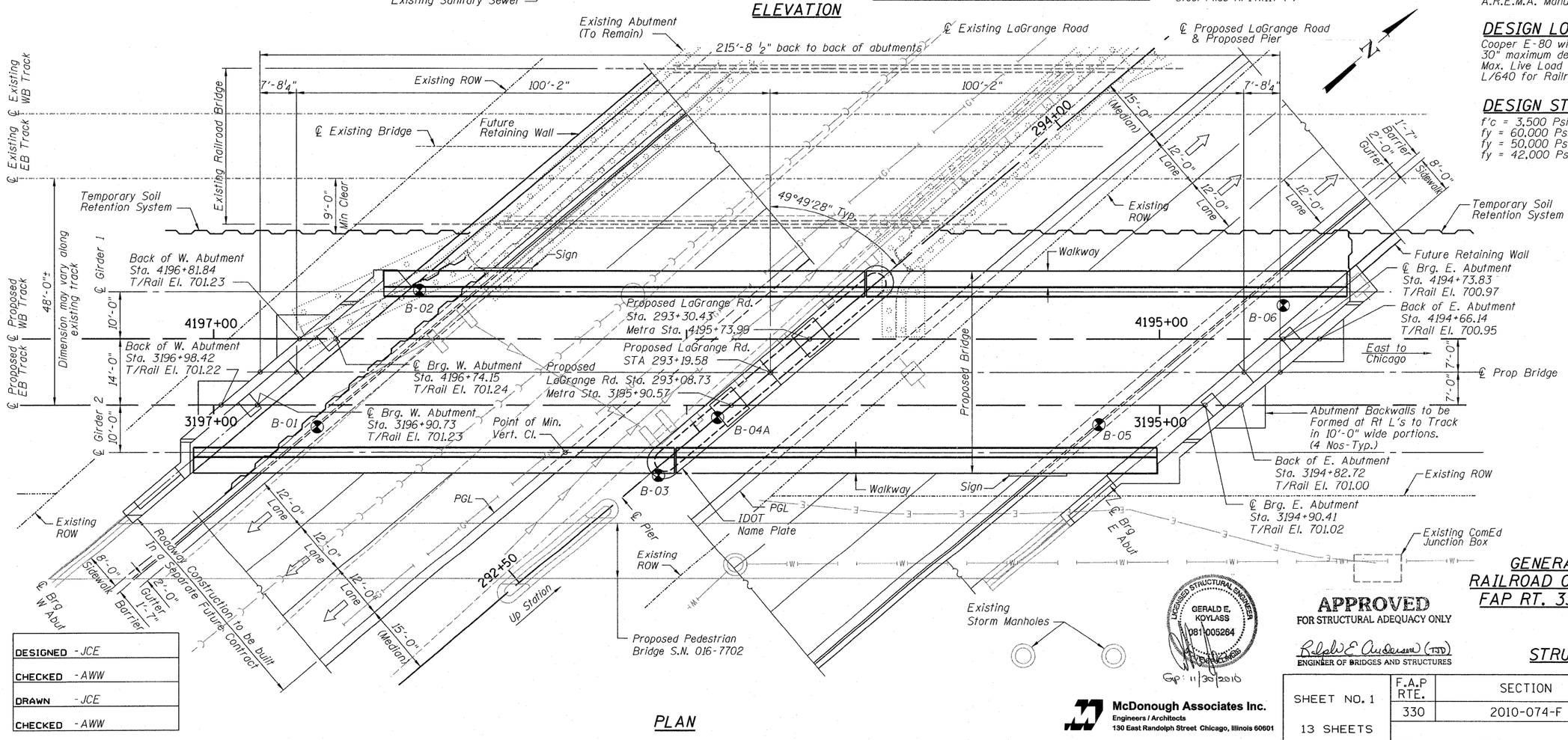


## PLAN

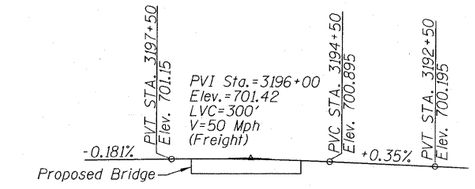


## TOP OF RAIL ELEVATIONS

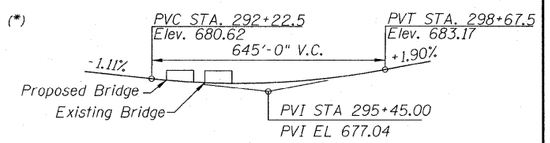


## PROP. PROFILE GRADE-LAGRANGE RD

## DESIGN SPECIFICATIONS

Specifications for Design and Materials:
A.R.E.M.A. Manual for Railway Engineering 2010.

## DESIGN LOADING

Cooper E-80 with Diesel Impact with Alternate Live Load
30" maximum design ballast.
Max. Live Load plus Impact Deflection Criteria
L/640 for Railroad Super Structure.

## DESIGN STRESSES

f'c = 3,500 Psi (Concrete)
fy = 60,000 Psi (Reinforcing Steel)
fy = 50,000 Psi (ASTM A709 Grade 50 Structural Steel)
fy = 42,000 Psi (ASTM A572 Grade 42 HLMR Bearings)

## LEGEND

Soil Boring
Existing Storm Sewer
Existing Gas Line
Existing Sanitary
Existing Water Line

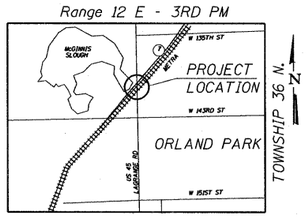


## LOCATION SKETCH

| | |
|---|---|
| DESIGNED | - JCE |
| CHECKED | - AWW |
| DRAWN | - JCE |
| CHECKED | - AWW |

McDonough Associates Inc.
Engineers / Architects
130 East Randolph Street Chicago, Illinois 60601

LICENSED STRUCTURAL ENGINEER GERALD E. KOYLASS 081-005264 ILLINOIS
Exp: 11/30/2010

**APPROVED**
FOR STRUCTURAL ADEQUACY ONLY
Ralph E. Anderson (TJD)
ENGINEER OF BRIDGES AND STRUCTURES

## GENERAL PLAN & ELEVATION
## RAILROAD OVER US 45 (LaGRANGE RD.)
## FAP RT. 330 - SECTION 2010-074-F
## COOK COUNTY
## STA. 293+19.58
## STRUCTURE NO. 016-6201

| SHEET NO. 1 | F.A.P RTE. | SECTION | COUNTY | TOTAL SHEETS | SHEET NO. |
|---|---|---|---|---|---|
| 13 SHEETS | 330 | 2010-074-F | COOK | 15 | 3 |
| | | | CONTRACT NO. 60L60 | | |
| | DATE: 08/12/10 | ILLINOIS | FED. AID PROJECT | | |

0166201-60L60-001-GPE.dgn