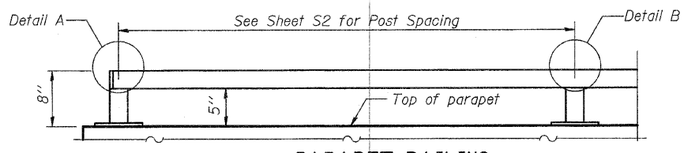

PARAPET RAILING ELEVATION
(Inside Face)

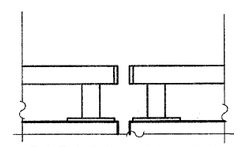

PARAPET RAILING ELEVATION AT EXPANSION JOINT

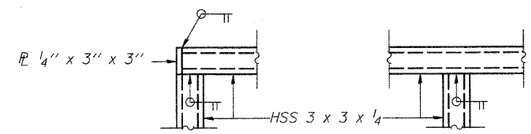

DETAIL A

DETAIL B

All steel rail elements shall be galvanized according to Article 509.05 of the Standard Specifications

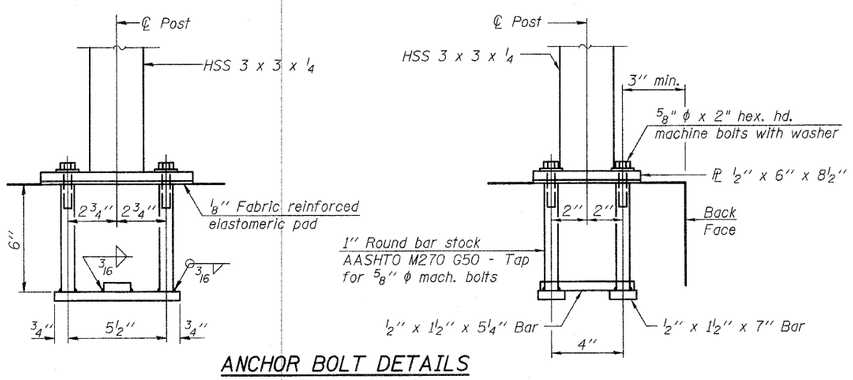

ANCHOR BOLT DETAILS

In lieu of the cast-in-place anchor device shown, the Contractor has the option of drilling and setting 5/8" ϕ anchor rods according to Article 509.06 of the Standard Specifications. Embedment shall be according to the manufacturer's specifications.

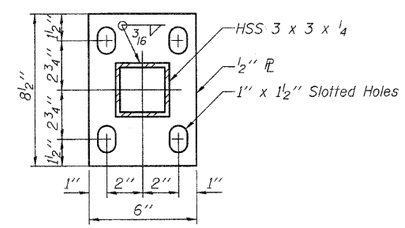

BASE PL

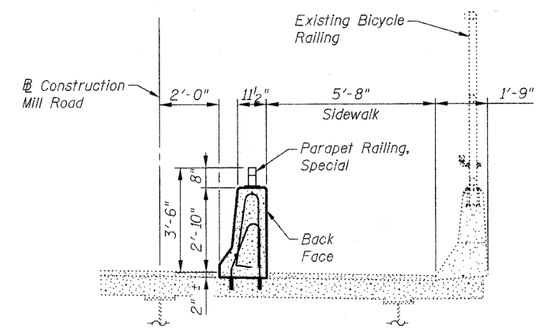

SECTION THRU DECK

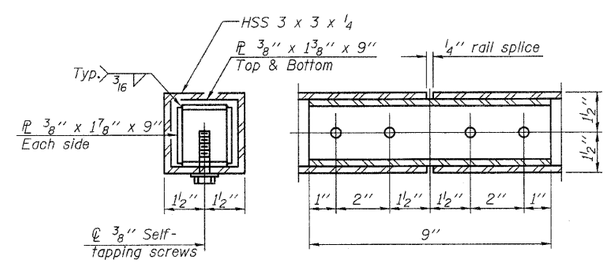

RAIL SPLICE

BILL OF MATERIAL

Item	Unit	Quantity
Parapet Railing, Special	Foot	339

FILE NAME = $FILEL$	USER NAME = g,jh	DESIGNED -	REVISED - ___
		DRAWN -	REVISED - ___
	PLOT SCALE = $SCALE$	CHECKED -	REVISED - ___
	PLOT DATE = 6/30/2010	DATE - July 1, 2010	REVISED - ___

STATE OF ILLINOIS
DEPARTMENT OF TRANSPORTATION

PARAPET RAILING DETAILS
MILL ROAD OVER I-290 - STA. 159+87.46
DUPAGE COUNTY, SECTION 22-IHB-6, SN 022-0109
SHEET NO. 3 OF 3 SHEETS

F.A.U. RTE.	SECTION	COUNTY	TOTAL SHEETS	SHEET NO.
2625	07-00097-00-SW	DUPAGE	31	17
		CONTRACT NO. 63502		

FED. ROAD DIST. NO. 1 | ILLINOIS | FED. AID PROJECT

PLAN: SURVEYED / PLOTTED / ALIGNMENT CHECKED / ALL CORR. MAY CHECKED / CADD FILE NAME / NOTE BOOK NO. / DATE / BY

PROFILE: SURVEYED / PLOTTED / GRADES CHECKED / ALL CORR. MAY CHECKED / STRUCTURE NOTAT'NS CH'KD / NOTE BOOK NO. / DATE / BY

J:\2013\cadd\Struct\03_Railing.dgn
lt0253 AM
gjh
6/30/2010