STATE OF ILLINOIS
DEPARTMENT OF TRANSPORTATION

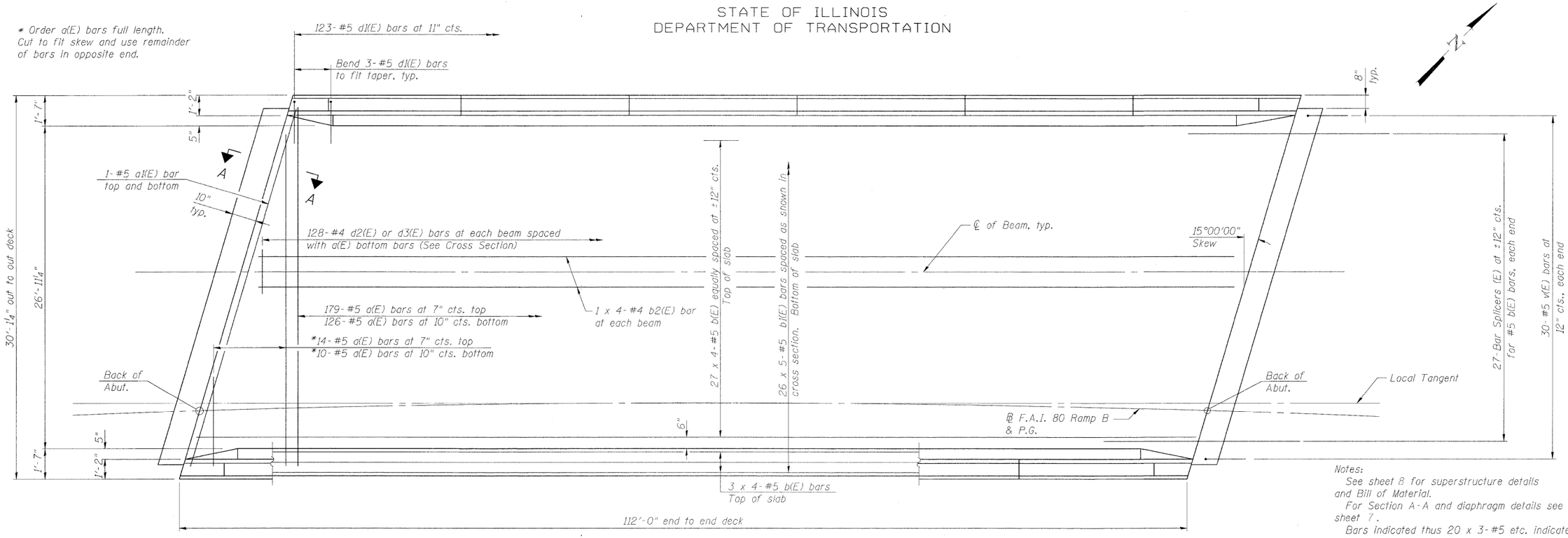

PLAN

Notes:
See sheet 8 for superstructure details and Bill of Material.
For Section A-A and diaphragm details see sheet 7.
Bars indicated thus 20 x 3-#5 etc. indicates 20 lines of bars with 3 lengths per line.
See sheet 8 for parapet reinforcement.

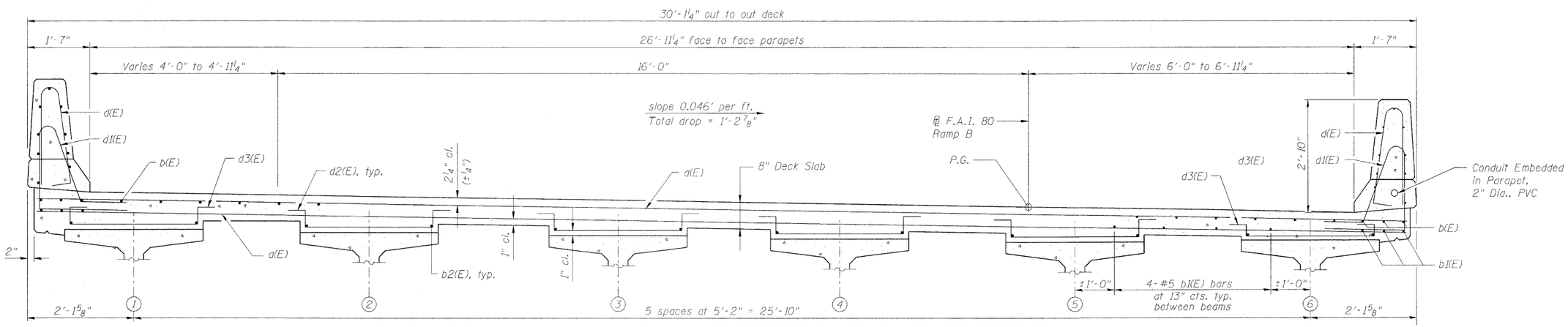

CROSS SECTION
(Looking East)

DECK PLAN & CROSS SECTION
STRUCTURE NO. 032-0117

DESIGNED - LJB	
CHECKED - CMM	
DRAWN - GJS	
CHECKED - CMM	

MINIMUM BAR LAPS
#4 bar = 2'-7"
#5 bar = 3'-3"

LOCHNER
H.W. LOCHNER, INC.
CONSULTING ENGINEERS & PLANNERS
20 NORTH WACKER DRIVE SUITE 1200
CHICAGO, IL 60606

SHEET NO. 6 OF 19 SHEETS

RTE.	SECTION	COUNTY	TOTAL SHEETS	SHEET NO.
*	(32,47-4) HBK-4 & G(N)	GRUNDY	351	319
		CONTRACT NO. 66408		
FED. ROAD DIST. NO.	ILLINOIS	FED. AID PROJECT		

* FAI 80 & FAS 297 / FAU 392

t:\1812\struct\dgn\0320117-66408-006-DP01.dgn