* Contractor is to verify beam length prior to ordering material. Other sections meeting the section modulus requirements shown may be allowed subject to approval by the Bureau of Bridges and Structures, however, no additional payment will be allowed if the contractor chooses a heavier steel section than the one specified in the plans. Maximum girder depth = 24", Min. Sx = 127 in³.

Note A:
Transverse tie PL's (1 per span). Place additional shims at midpoints between tie PL's. Securely weld shims to top flange of support beam. Minimum shim size is 6" x flange width.

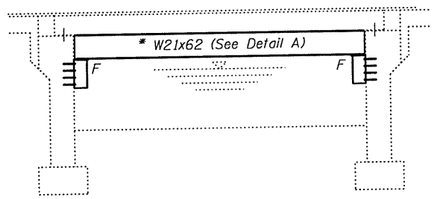

ELEVATION

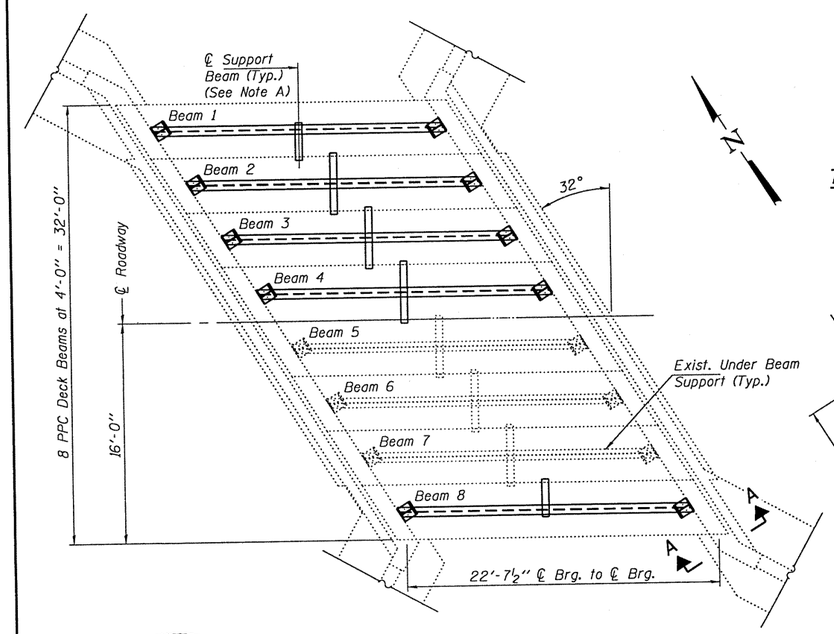

PLAN

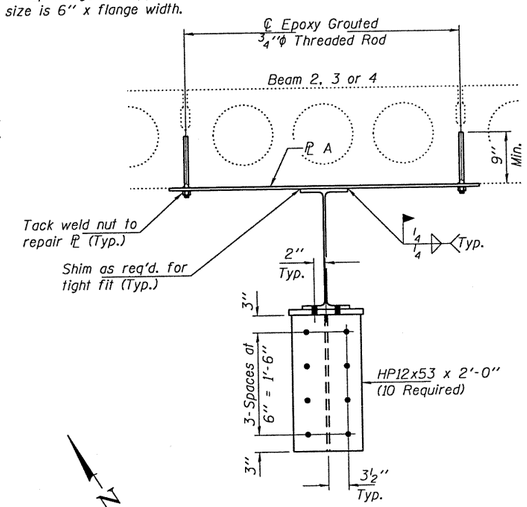

TYPICAL SECTION THRU BEAMS 2 THRU 4

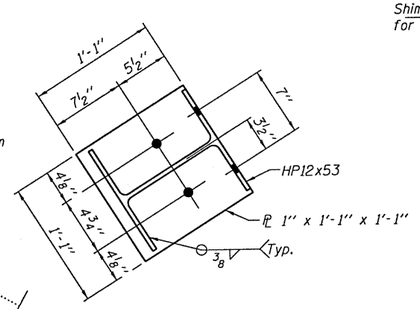

SECTION C-C

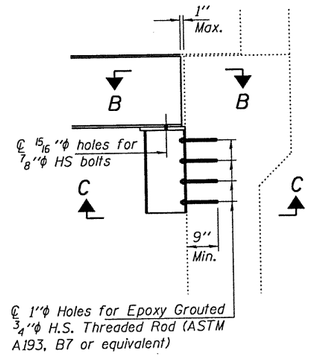

SECTION A-A

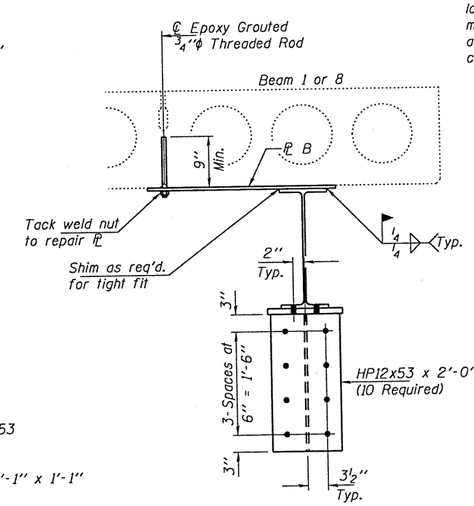

TYPICAL SECTION THRU FASCIA BEAMS 1 & 8

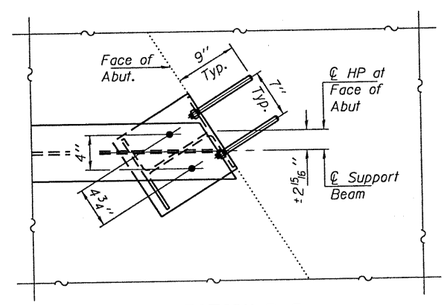

SECTION B-B

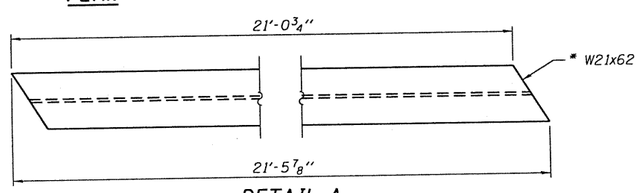

DETAIL A
W21x62 x 21'-5⅞" (5 Required)

GENERAL NOTES

All structural steel shall conform to AASHTO Classification M-270 Gr. 36, unless otherwise noted.

Plan dimensions and details relative to existing plans are subject to nominal construction variations. The Contractor shall field verify existing dimensions and details affecting new construction and make necessary approved adjustments prior to construction or ordering of materials. Such variations shall not be cause for additional compensation for a change in scope of the work, however, the Contractor will be paid for the quantity actually furnished at the unit price bid for the work.

See Section 584 of the Standard Specifications for Epoxy Grouting of Threaded Rods.

The cost of epoxy grouting threaded rods shall be included with Furnishing and Erecting Structural Steel.

The Contractor has the option of using used steel. See special provisions.

The contractor is advised that the existing PPC Deck Beams are in a deteriorated condition with reduced load carrying capacity. It is the contractors responsibility to account for the condition of the beams when developing construction procedures.

If the contractor's procedure for placement of beams involves placement of cranes or other heavy equipment on the bridge, a detailed procedure shall be submitted to the Engineer for approval. The procedure shall include calculations, prepared and sealed by an Illinois Licensed Structural Engineer, verifying that the equipment and procedure used will not overstress the existing beams. To distribute load to multiple beams and protect the existing surface, in all cases a double layer mat of heavy timbers shall be used at all times under crane tracks or wheels and any outriggers in the down position. If necessary, shims shall be used under the crane mat to ensure uniform contact with the underlying beams.

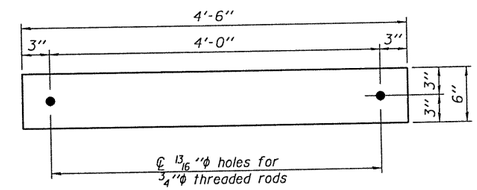

TRANSVERSE TIE PL A
PL ½" x 4'-6" x 6" (3 Req'd)

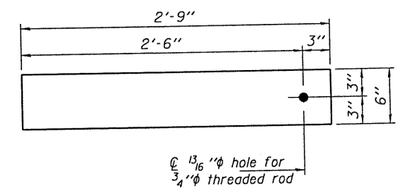

TRANSVERSE TIE PL B
PL ½" x 2'-9" x 6" (2 Req'd)

TOTAL BILL OF MATERIAL

ITEM	UNIT	QUANTITY
Furnishing and Erecting Structural Steel	Pound	8540

STATE OF ILLINOIS
RALPH E. ANDERSON
081-004625
SPRINGFIELD
LICENSED STRUCTURAL ENGINEER

Expires: November 30, 2010

U.S. ROUTE 6
SN 050-0183

DESIGNED	Victor H. Deliz	EXAMINED	A. Carl Pinzy, ENGINEER OF STRUCTURAL SERVICES
CHECKED		PASSED	Ralph E. Anderson, ENGINEER OF BRIDGES AND STRUCTURES
DRAWN	Kyle W. Steffen	DATE -	JULY 19, 2010
CHECKED	VHD		

STATE OF ILLINOIS
DEPARTMENT OF TRANSPORTATION

GENERAL PLAN, ELEVATION & REPAIR DETAILS

SHEET NO. 1 OF 1 SHEETS

F.A.P. RTE.	SECTION	COUNTY	TOTAL SHEETS	SHEET NO.
623	(H-BR-1)1-1	LaSALLE	5	5
		CONTRACT NO. 66A60		
		ILLINOIS FED. AID PROJECT		