STATE OF ILLINOIS
DEPARTMENT OF TRANSPORTATION

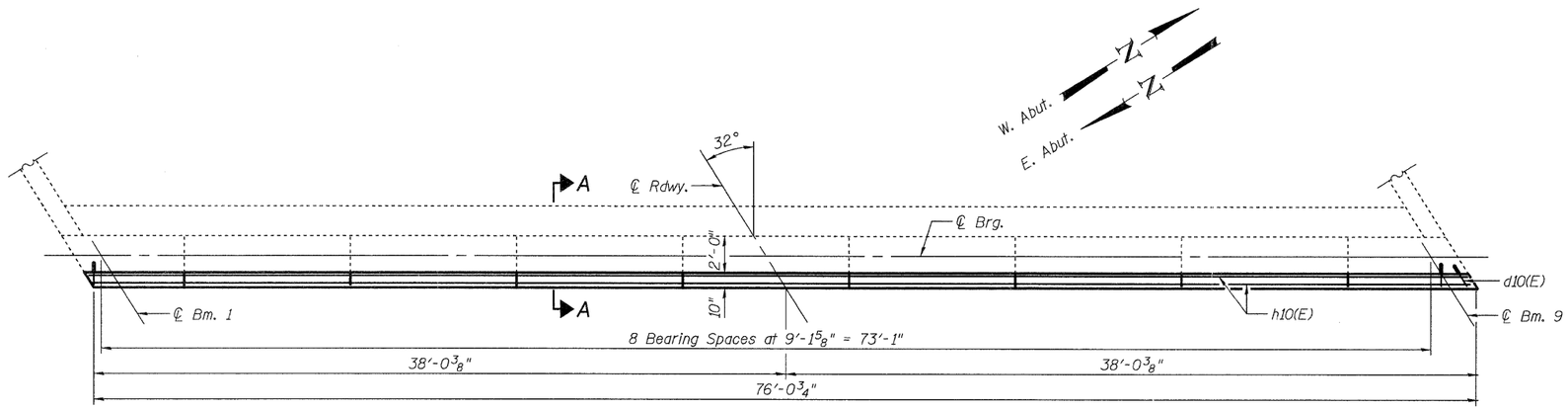

PLAN OF CAP

(E. Abut. shown, W. Abut. similar)

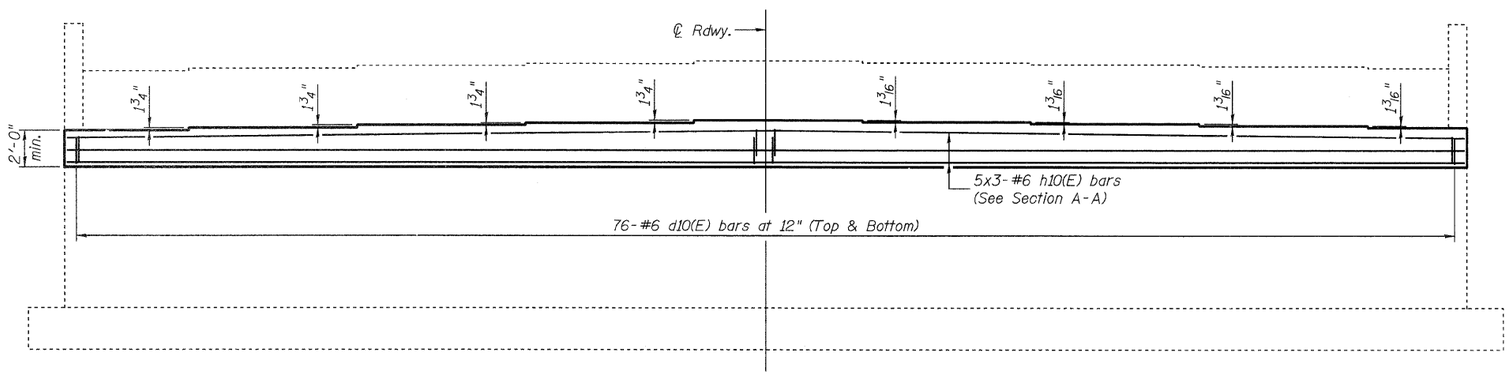

ELEVATION

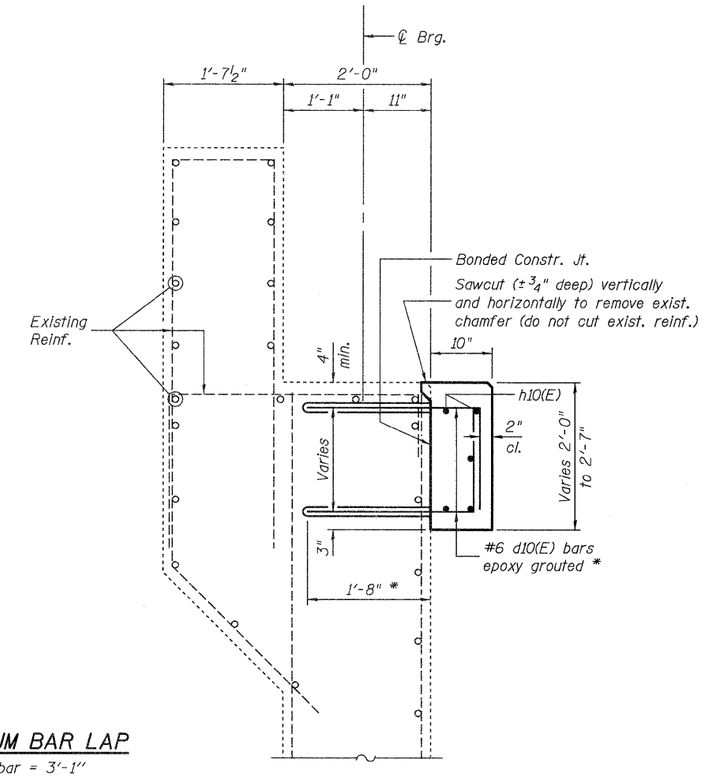

SECTION A-A

MINIMUM BAR LAP

#6 bar = 3'-1"

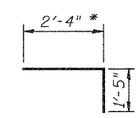

BAR d10(E)

BILL OF MATERIAL

Bar	No.	Size	Length	Shape
d10(E)	152	#6	3'-9"	
h10(E)	15	#6	27'-4"	

		E. Abut.	W. Abut.
Concrete Structures	Cu. Yd.	5.4	5.4
Reinforcement Bars, Epoxy Coated	Pound	1480	1480
Concrete Sealer	Sq. Ft.	216	216

Bars indicated thus 5 x 3-#6 indicates 5 lines of bars with 3 lengths per line.

Reinforcement Bar list is for one Abutment only.

Apply Concrete Sealer to existing and new beam seat areas (full length of cap).

* Note:
The length of the horizontal leg of the d10(E) bar allows for a concrete removal depth up to 5" plus an embedment of 1'-3". In non-repair areas, the embedment depth will be 1'-8".

Johnson, Depp & Quisenberry
CONSULTING ENGINEERS
Springfield, Illinois

DESIGNED:	DCD	DRAWN:	P. Ray
CHECKED:	CMV	CHECKED:	CMV/DCD

ABUTMENTS
STRUCTURE NO. 060-0198

SHEET 10 OF 11	F.A.I. RTE.	SECTION	COUNTY	TOTAL SHEETS	SHEET NO.
	55	60-3RS-1, 60-(3HB,3HB-1)I	MADISON	123	102
		STA. 363+22.00	CONTRACT NO. 76601		
	FED. ROAD DIST. NO.	ILLINOIS	FED. AID PROJECT		

PRINT DATE: 06/22/2010 17:42:14 SAVE DATE: 6/22/2010 USER: DCD FILE: J:\JDQ\11095 IL-DBVV#9 I-55 Madison Bridge Repairs\2-NewDouglasRd\060198-76601-010-abut3.dgn