STATE OF ILLINOIS
DEPARTMENT OF TRANSPORTATION

* Center of horizontal to center of splice dimension may vary. Verify before drilling holes in mounting tube.

FAI Route 72
D 5 OVD SIN STR REPL 2010-01
Champaign County
Sheet 13 of 23
Contract Number 46062

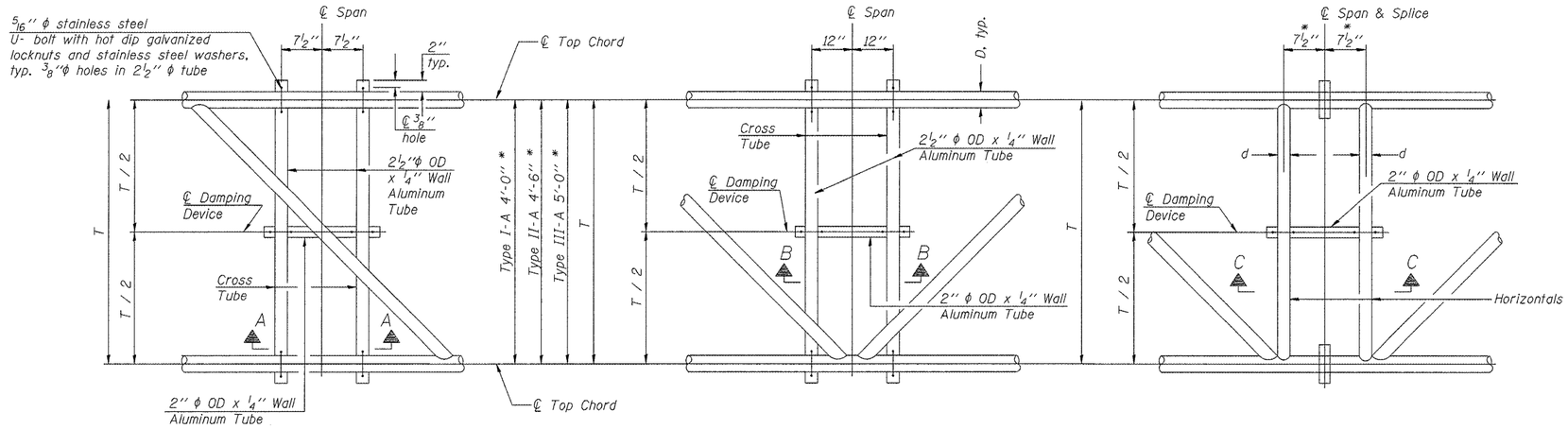

PLAN DETAIL "A"
℄ Span between Panel Points

PLAN DETAIL "B"
℄ Span at Panel Point

PLAN DETAIL "C"
℄ Span at ℄ Chord Splice

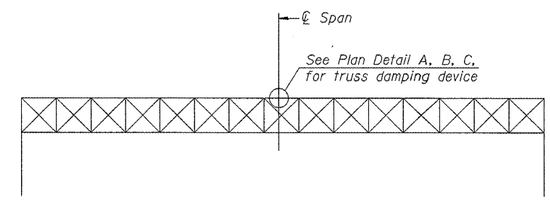

ELEVATION
Aluminum Overhead Sign Truss

NOTES

Damper: One damper per truss.
(31 lbs. Stockbridge-Type Aluminum)
Cost included in Overhead Sign Structure...

Materials: Aluminum tubes shall be ASTM B221 alloy 6061 temper T6. Cost included in Overhead Sign Structure...

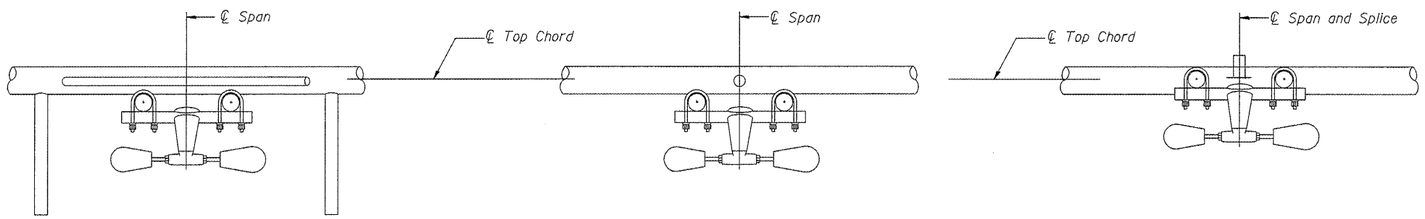

SECTION A-A

SECTION B-B

SECTION C-C

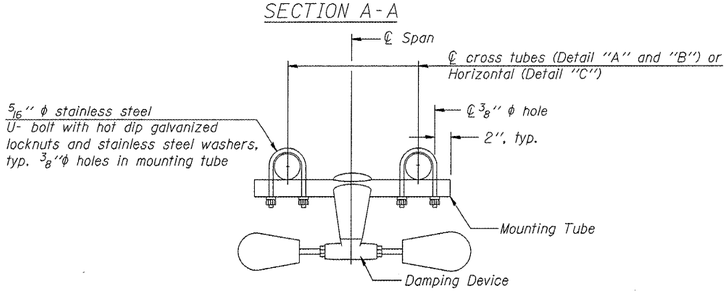

TRUSS DAMPING
DEVICE CONNECTION DETAIL
(Typical)

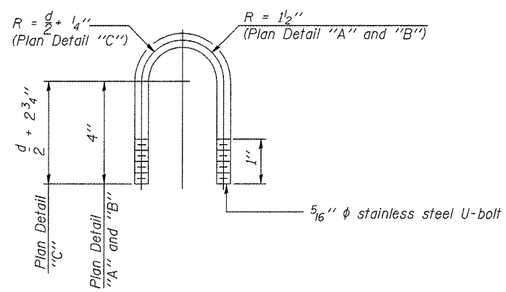

DAMPING DEVICE MOUNTING
TUBE U-BOLT DETAIL
(Typical)

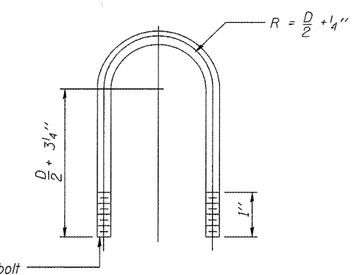

TOP CHORD TO CROSS TUBE
U-BOLT DETAIL
(Typical - Detail "A" and "B")

DESIGNED -	
CHECKED -	
DRAWN -	
CHECKED -	

\- 20
EXAMINED
ENGINEER OF BRIDGE DESIGN
PASSED
ENGINEER OF BRIDGES AND STRUCTURES

OVERHEAD SIGN STRUCTURE
DAMPING DEVICE

District 5
Overhead Sign
Structure Replacement

OS-A-D 5/16/08