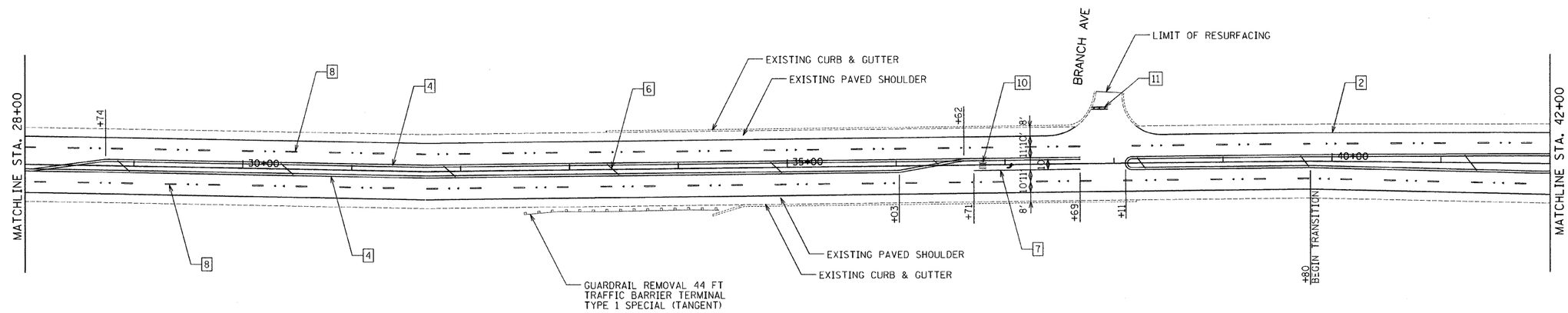

LEGEND

1. THERMOPLASTIC PAVEMENT MARKING - LINE 4" YELLOW SOLID
2. THERMOPLASTIC PAVEMENT MARKING - LINE 4" WHITE SOLID
3. THERMOPLASTIC PAVEMENT MARKING - LINE 4" YELLOW SKIP DASH - 10' DASH, 30' SKIP
4. THERMOPLASTIC PAVEMENT MARKING - LINE 4" YELLOW, 2 @ 11" C-C W/2 AMBER 2 WAY RPM'S
5. THERMOPLASTIC PAVEMENT MARKING - LINE 6" WHITE 2' DASH, 6' SKIP
6. THERMOPLASTIC PAVEMENT MARKING - LINE 12" YELLOW @ 45 DEGREE
7. THERMOPLASTIC PAVEMENT MARKING - LINE 6" WHITE
8. THERMOPLASTIC PAVEMENT MARKING - LINE 4" (WHITE 10' DASH, 30' SKIP W/ 2 CRYSTAL/OPAQUE RPM'S)
9. THERMOPLASTIC PAVEMENT MARKING - LINE 12" WHITE @ 45 DEGREE
10. THERMOPLASTIC PAVEMENT MARKING - LETTERS & SYMBOLS
11. THERMOPLASTIC PAVEMENT MARKING - LINE 24" WHITE
12. THERMOPLASTIC PAVEMENT MARKING - LINE 8" WHITE

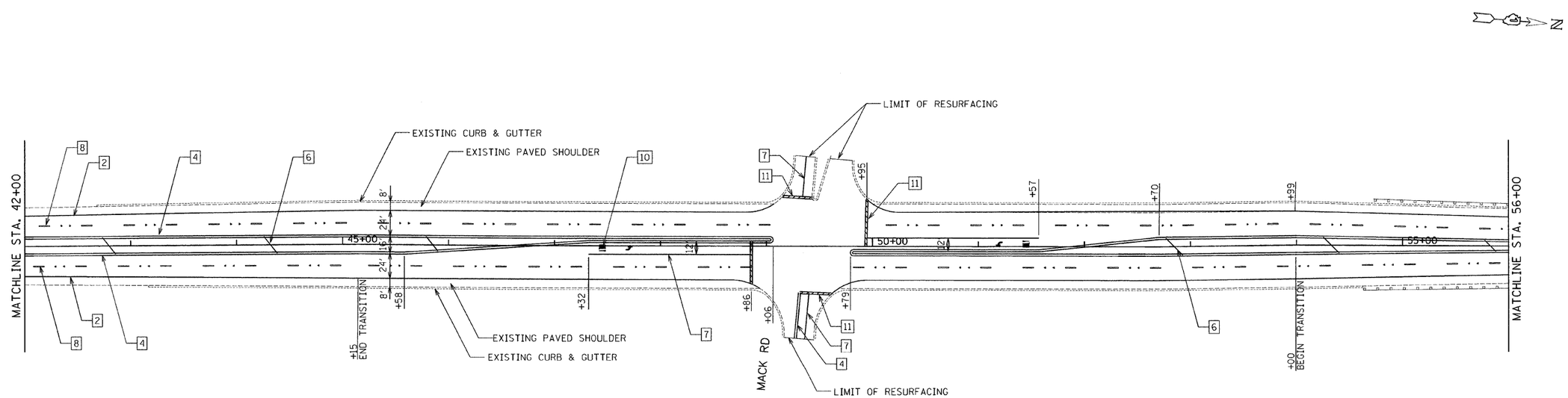

FILE NAME =	USER NAME = _USER_	DESIGNED -	REVISED -	STATE OF ILLINOIS DEPARTMENT OF TRANSPORTATION	IL 59 – IL 64 TO BATAVIA ROAD ROADWAY AND PAVEMENT MARKING PLANS	F.A.P. RTE.	SECTION	COUNTY	TOTAL SHEETS	SHEET NO.
		DRAWN -	REVISED -			338	(11) & (12) RS-8	DUPAGE	42	9
	PLOT SCALE = 50.0012 ' / IN.	CHECKED -	REVISED -					CONTRACT NO. 60H70		
	PLOT DATE = 6/24/2009	DATE -	REVISED -		SCALE: 50 / SHEET NO. 2 OF 13 SHEETS / STA. 28+00 TO STA. 56+00			ILLINOIS FED. AID PROJECT		

h:\Jobs-2009\20093023-01\CAD\Site\dgn\09\IE0H70-sht-plan-2.dgn