STATE OF ILLINOIS
DEPARTMENT OF TRANSPORTATION

F.AU. RTE.	SECTION	COUNTY	TOTAL SHEETS	SHEET NO.
2843	3249B-F	COOK	22	15
FED.ROAD DIST.NO.		ILLINOIS	FED.AID PROJECT-	

Sheet 13 of 22 Contract No.60119

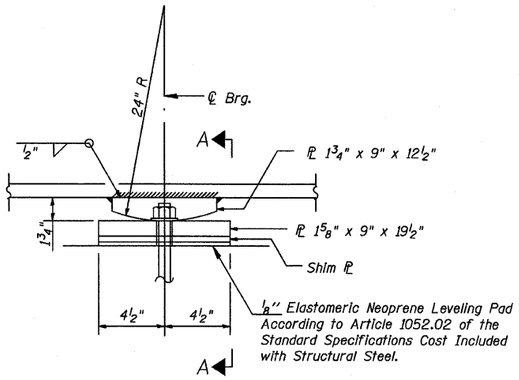

ELEVATION AT SOUTH PIER

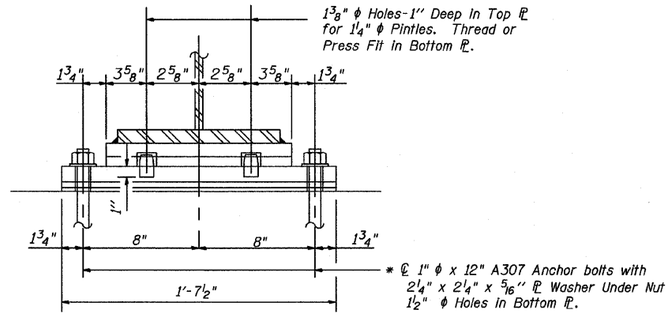

SECTION A-A

FIXED BEARING

Number of Bearing Assemblies Required - 8

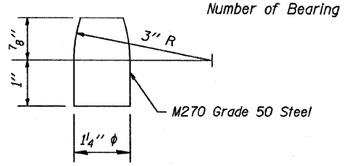

PINTLE

BEARINGS BILL OF MATERIALS

Item	Unit	Total
Anchor Bolts, 1"	Each	64

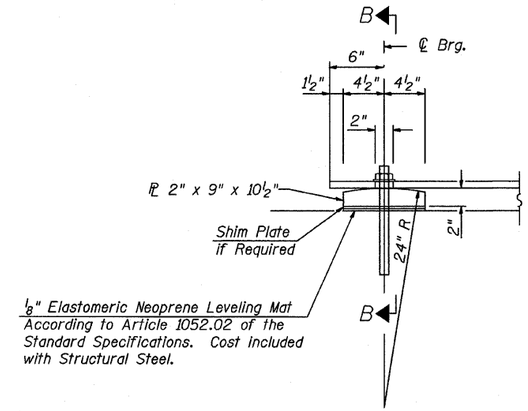

ELEVATION AT SOUTH ABUTMENT

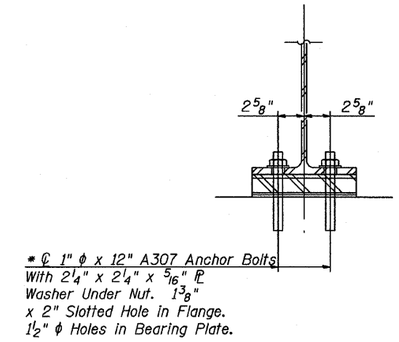

SECTION B-B

FIXED BEARING

Number of Bearing Assemblies Required - 8

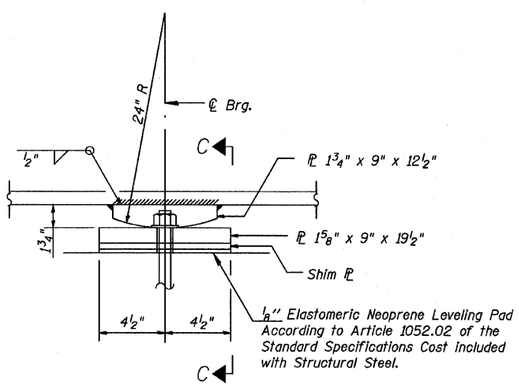

ELEVATION AT NORTH PIER

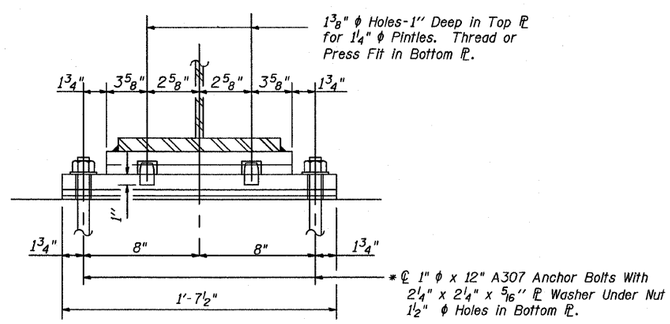

SECTION C-C

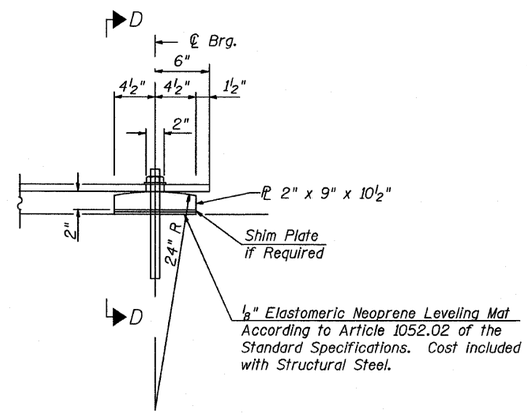

ELEVATION AT NORTH ABUTMENT

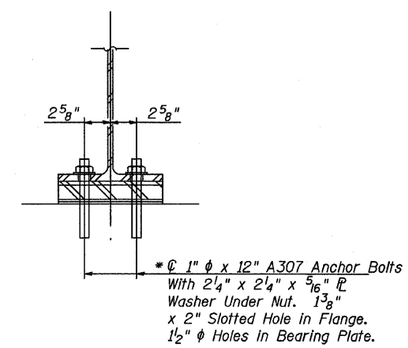

SECTION D-D

FIXED BEARING

Number of Bearing Assemblies Required - 8

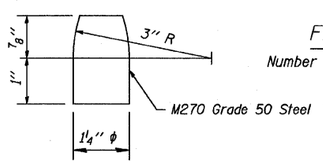

PINTLE

FIXED BEARING

Number of Bearing Assemblies Required - 8

* Anchor bolts shown are not part of this contract and are shown for information only.

Notes:
Anchor bolts at fixed bearings may be built into the Concrete Abutment.
See sheet 19 of 20 for Anchor Bolt installation.

RME Rubinos & Mesia Engineers, Inc.

REVISIONS	
NAME	DATE

BEARING DETAILS

DIXIE HIGHWAY OVER
BUTTERFIELD CREEK
F.A.U. ROUTE 2843 SECTION 3249B-F
STA. 78+55.00
COOK COUNTY
STRUCTURE NUMBER 016-7946 - PROPOSED
016-0775 - EXISTING

SCALE: NOT-TO-SCALE
DATE 7-10-09

DRAWN BY TH
DESIGNED BY TH
CHECKED BY MF

$PENTBLS$
$PLTDRVS$
$FILES$
$DATE$
$TIME$