CONTRACT NO. 63207

Engineering Enterprises, Inc.

F.A.U RTE.	SECTION	COUNTY	TOTAL SHEETS	SHEET NO.
1680	05-00038-00-PV	KANE/KENDALL	130	7
STA.		TO STA.		
FED. ROAD DIST. NO. _		ILLINOIS	FED. AID PROJECT	

EXISTING PAVEMENT CROSS SECTION
EXISTING BASELINE ROAD
(STA. 0+00 TO STA. 2+20)

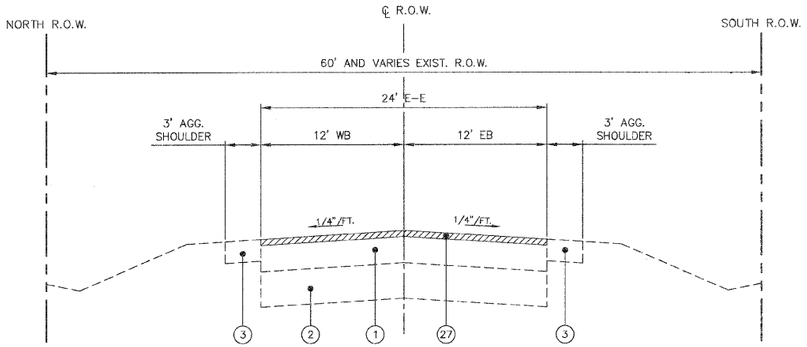

EXISTING PAVEMENT CROSS SECTION
EXISTING BASELINE ROAD
(STA. 2+20 TO STA. 3+80)

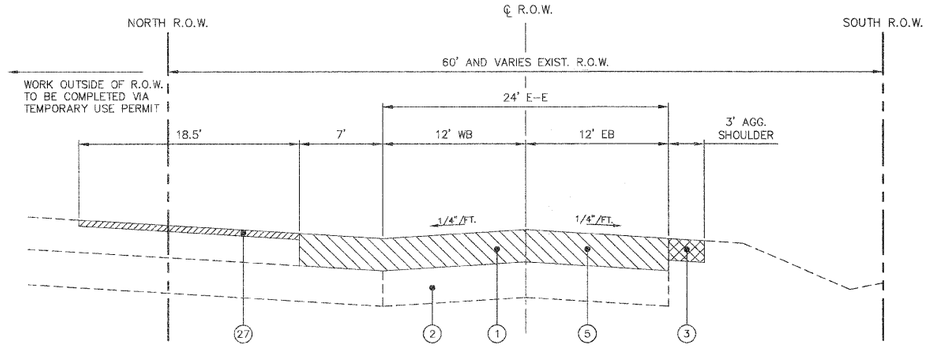

PROPOSED PAVEMENT CROSS SECTION
EXISTING BASELINE ROAD
(STA. 0+00 TO STA. 2+20)

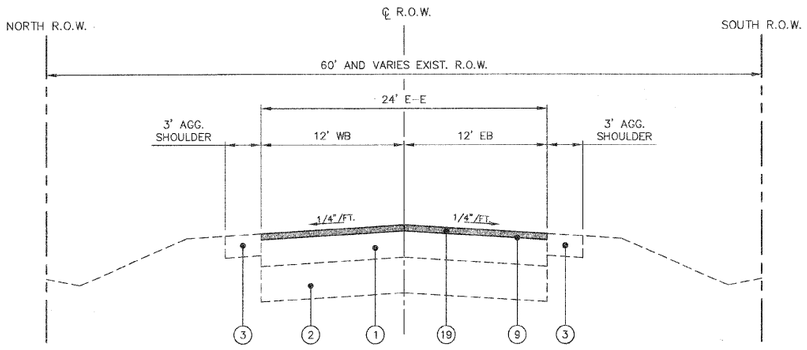

PROPOSED PAVEMENT CROSS SECTION
EXISTING BASELINE ROAD
(STA. 2+20 TO STA. 3+80)

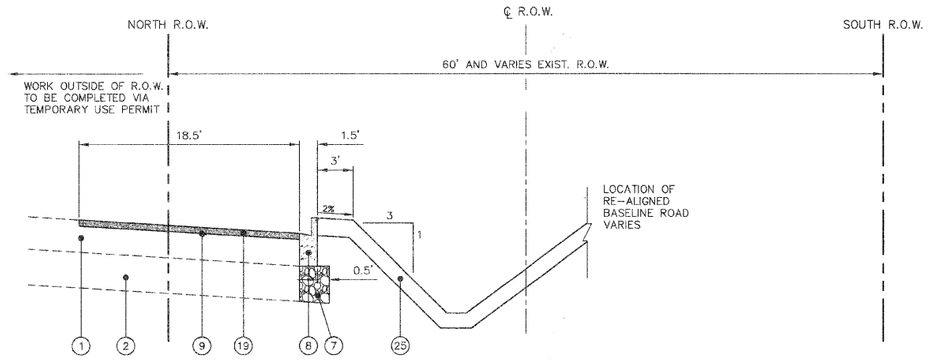

LEGEND

1. EXISTING ASPHALT PAVEMENT
2. EXISTING BASE MATERIAL
3. EXISTING AGGREGATE SHOULDER
4. EXISTING PAVED SHOULDER
5. PAVEMENT REMOVAL
6. EARTH EXCAVATION (WIDENING)
7. PROPOSED AGGREGATE SUBGRADE, 12"
8. PROPOSED COMBINATION CONCRETE CURB AND GUTTER, TYPE B-6.12
9. BITUMINOUS MATERIALS (PRIME COAT)
10. POLYMERIZED BITUMINOUS MATERIALS (PRIME COAT)
11. AGGREGATE (PRIME COAT)
12. PROPOSED HOT-MIX ASPHALT BASE COURSE, 6 3/4" (2 LIFTS)
13. PROPOSED HOT-MIX ASPHALT BASE COURSE, 7 1/2" (3 LIFTS)
14. PROPOSED POLYMERIZED HOT-MIX ASPHALT BINDER COURSE, IL-19.0, N90, 12" (3 LIFTS)
15. PROPOSED POLYMERIZED HOT-MIX ASPHALT BASE COURSE, IL-19.0, N90, 13" (3 LIFTS)
16. PROPOSED HOT-MIX ASPHALT BINDER COURSE, IL-19.0, N50, 2.25"
17. PROPOSED HOT-MIX ASPHALT BINDER COURSE, IL-19.0, N50, 8" (3 LIFTS)
18. PROPOSED LEVELING BINDER (MACHINE METHOD), N70, 1.0" & VARIES
19. PROPOSED HOT-MIX ASPHALT SURFACE COURSE, MIX "D", N50, 2"
20. PROPOSED HOT-MIX ASPHALT SURFACE COURSE, MIX "D", N70, 1.5"
21. PROPOSED HOT-MIX ASPHALT SURFACE COURSE, MIX "D", N70, 2"
22. PROPOSED POLYMERIZED HOT-MIX ASPHALT SURFACE COURSE, MIX "F", N90, 2"
23. PROPOSED HOT-MIX ASPHALT SHOULDERS, 8" (2" SURFACE, 6" BINDER)
24. STRIP REFLECTIVE CRACK CONTROL
25. TOPSOIL, SEEDING, FERTILIZER AND MULCH PER PLANS
26. HOT-MIX ASPHALT SURFACE REMOVAL, 1.5"
27. HOT-MIX ASPHALT SURFACE REMOVAL, 2"
28. POROUS GRANULAR EMBANKMENT SUBGRADE, AS NEEDED
29. GEOTECHNICAL FABRIC FOR GROUND STABILIZATION, AS NEEDED

HOT-MIX ASPHALT MIXTURE REQUIREMENT TABLE

ROADWAY	OPERATION	PAY ITEM DESCRIPTION	AC TYPE	VOIDS
EXISTING BASELINE ROAD	OVERLAY, 2"	HOT-MIX ASPHALT SURFACE COURSE, MIX "D", N50, 2" (IL-9.5 MM)	PG 64-22	4% @ 50 Gyr.

* WHEN RAP EXCEEDS 20%, THE NEW ASPHALT BINDER IN THE MIX SHALL BE PG 58-22.
THE UNIT WEIGHT USED TO CALCULATE ALL HOT-MIX ASPHALT QUANTITIES IS 112 LBS/SQ.YD./INCH.

REVISIONS	
NAME	DATE

ILLINOIS DEPARTMENT OF TRANSPORTATION

TYPICAL CROSS SECTIONS

SCALE:

DATE: 03-26-09

DRAWN BY: KKP

CHECKED BY: TVW

PLAN | SURVEYED | PLOTTED | ALIGNMENT CHECKED | TEST PITS CHECKED | CADD FILE NAME | NOTE BOOK NO. | BY | DATE

PROFILE | SURVEYED | PLOTTED | GRADES CHECKED | B.M. NOTED | STRUCTURE NOTAT'NS CH'KD | NOTE BOOK NO. | BY | DATE

Plotted: July 9, 2009 @ 3:23 PM By: Kris Pung - Tab: 07 Typ Sec 22x34

Path: H:\SDSKPROJ\M00755\DWG\DWG FINAL END\M00755-CSR