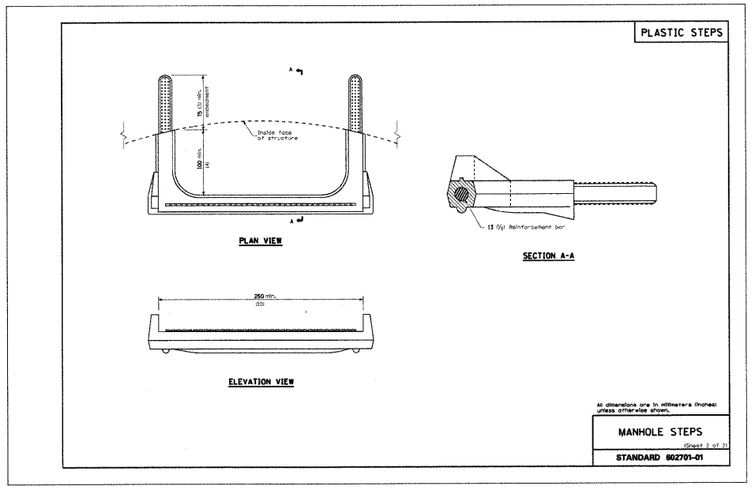

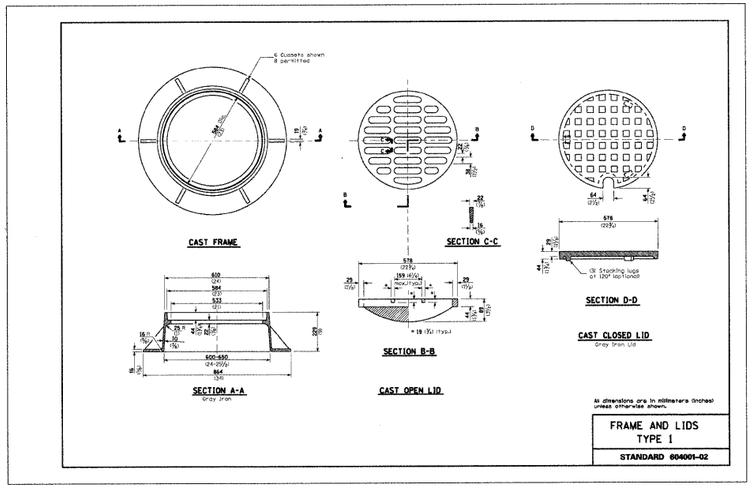

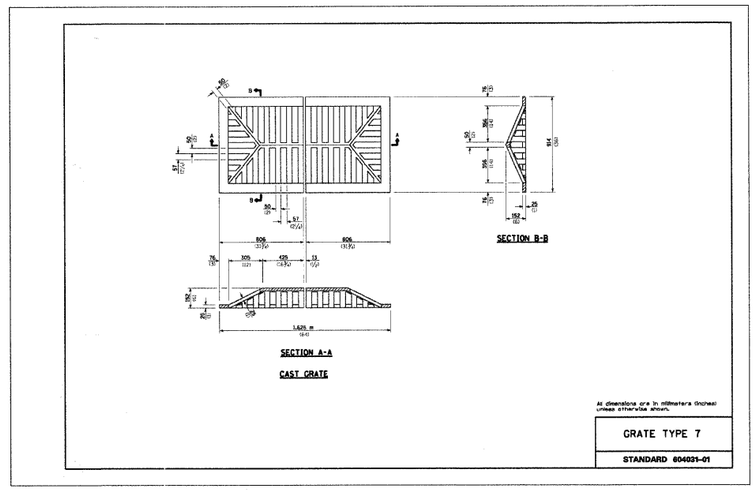

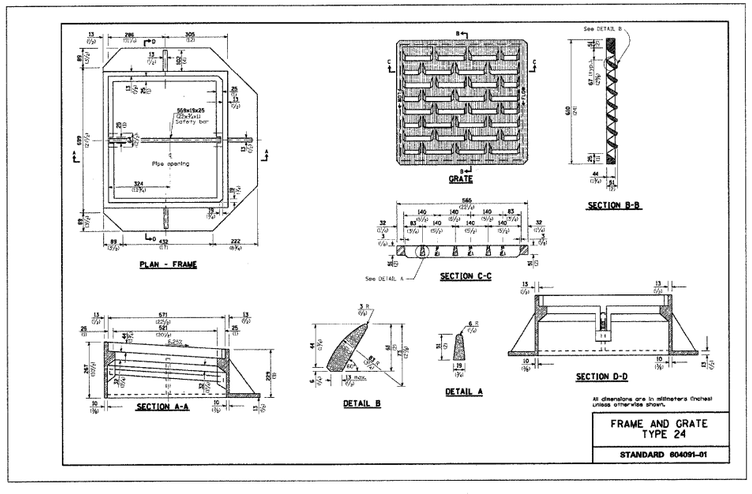

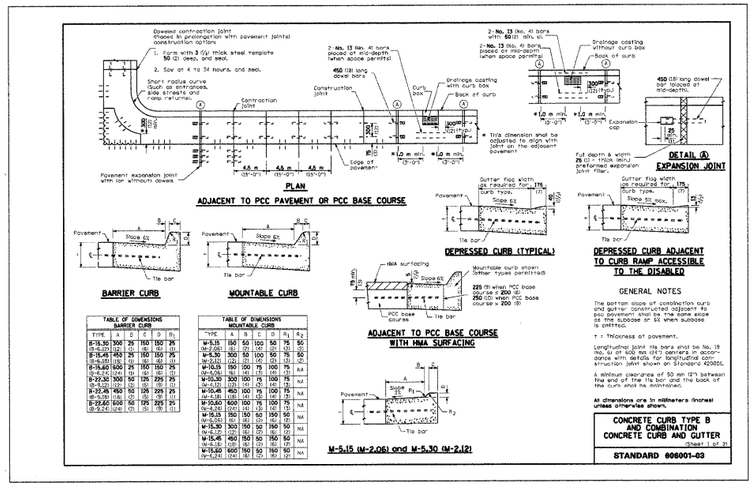

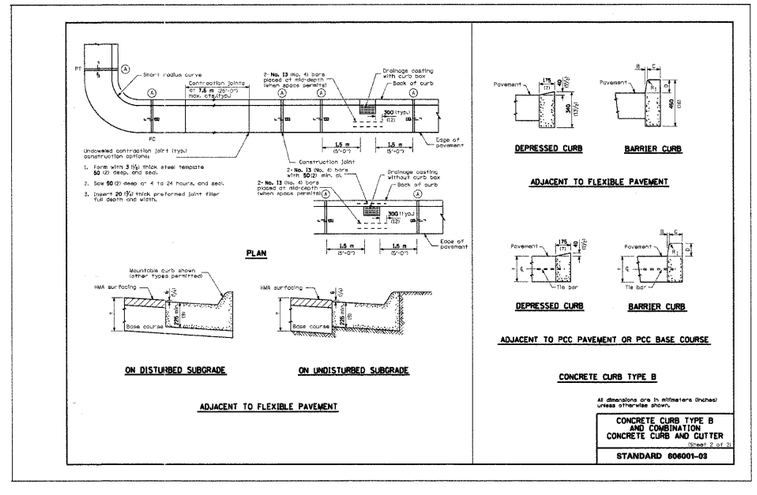

FILE NAME = I:\lakeco\0822401\draw\sheets\STD.10.dgn

CMT ©Copyright CMT, Inc. CRAWFORD, MURPHY & TILLY, INC. CONSULTING ENGINEERS License No. 184-000613	USER NAME = Steve Prange	DESIGNED - SJP	REVISED -
		DRAWN - SJP	REVISED -
	PLOT SCALE = 20.0000 ' / IN.	CHECKED - KDN	REVISED -
	PLOT DATE = 05/29/09	DATE - 05/29/09	REVISED -

LakeCounty Division of Transportation

I.D.O.T. STANDARD DRAWINGS

SCALE: N.T.S. | SHEET NO. 5 OF 14 SHEETS | STA. N/A TO STA. N/A

F.A. RTE.	SECTION	COUNTY	TOTAL SHEETS	SHEET NO.
1016	02-00110-12-WR	LAKE	206	189
		CONTRACT NO. 63209		
FED. ROAD DIST. NO. 1	ILLINOIS	FED. AID PROJECT		