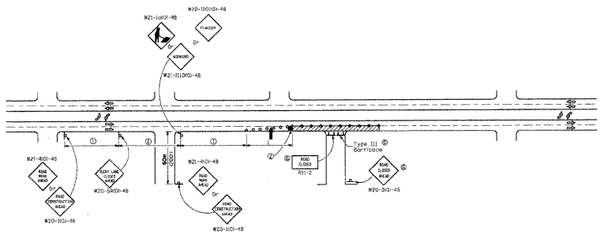

CASE IV

All dimensions are in millimeters (inches) unless otherwise shown.

URBAN LANE CLOSURE, MULTILANE, 2W WITH BIDIRECTIONAL LEFT TURN LANE

(Sheet 4 of 4)

STANDARD 701602-02

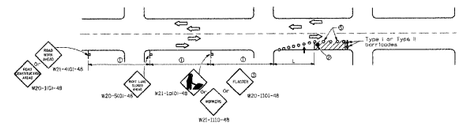

SIGN SPACING	
Posted Speed	Sign Spacing
40 or less	155 m (150')
50-55	195 m (200')
≥60	60 m (200')

SYMBOLS

- Arrow board
- Cone, drum or barricade
- Sign on portable or permanent support
- Work area
- Barricade or drum with flashing light
- Type III barricade with flashing lights
- Flagger with traffic control sign.

① Refer to SIGN SPACING TABLE for distances.

② Required for speeds > 40 MPH

③ Use flagger sign only when flagger is present.

④ For approved sidewalk closures.

⑤ Cones at 3 m (10') centers for 75 m (250'). Additional cones may be placed at 1 m (3') centers. Drum, drums or type I or type II barricades are used. No interval between devices may be doubled.

GENERAL NOTES

This Standard is used where at anytime, day or night, any vehicle, equipment, workers or their activities encroach on the pavement requiring the closure of one or more traffic lanes in an urban area.

Calculate L as follows

SPEED LIMIT	FORMULAS	
70 km/h (40 mph) or less	$L = \frac{WS^2}{155}$	$L = \frac{WS^2}{60}$
80 km/h (45 mph) or greater:	$L = 0.65SW(KS)$	$L = 1WKS$

W = Width of offset in meters (feet).

S = Normal posted speed km/h (mph).

All dimensions are in millimeters (inches) unless otherwise shown.

URBAN LANE CLOSURE, MULTILANE, 2W WITH MOUNTABLE MEDIAN

(Sheet 1 of 2)

STANDARD 701606-04

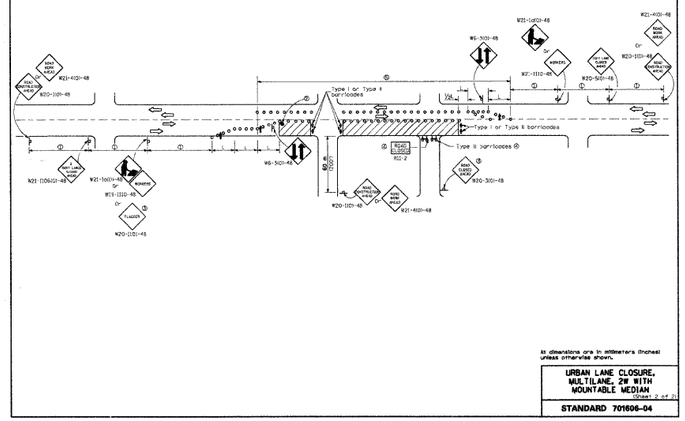

All dimensions are in millimeters (inches) unless otherwise shown.

URBAN LANE CLOSURE, MULTILANE, 2W WITH MOUNTABLE MEDIAN

(Sheet 2 of 2)

STANDARD 701606-04

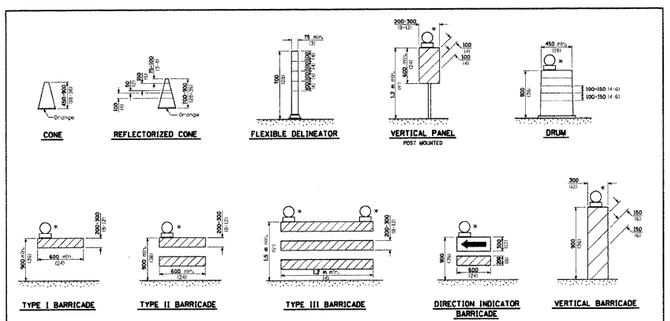

* Warning lights (if required)

GENERAL NOTES

All heights shown shall be measured above the pavement surface.

All dimensions are in millimeters (inches) unless otherwise shown.

TRAFFIC CONTROL DEVICES

(Sheet 1 of 3)

STANDARD 702001-06

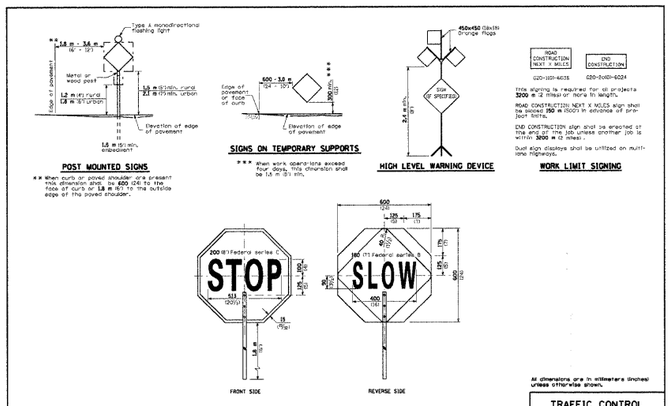

All dimensions are in millimeters (inches) unless otherwise shown.

TRAFFIC CONTROL DEVICES

(Sheet 2 of 3)

STANDARD 702001-06

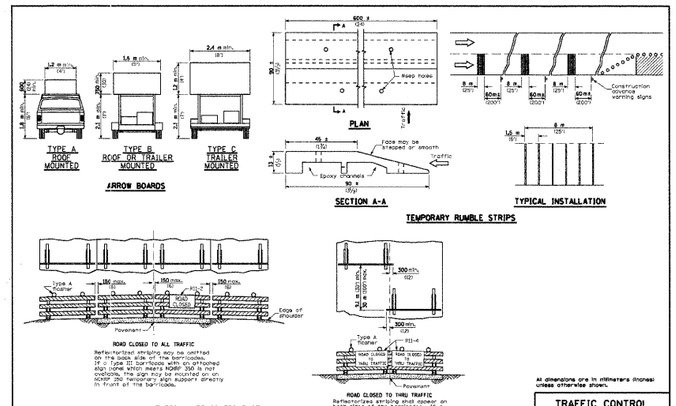

All dimensions are in millimeters (inches) unless otherwise shown.

TRAFFIC CONTROL DEVICES

(Sheet 3 of 3)

STANDARD 702001-06

FILE NAME = I:\lakeco\802240\dwg\sheets\STD_16.dgn

CMT ©Copyright CMT, Inc. CRAWFORD, MURPHY & TILLY, INC. CONSULTING ENGINEERS License No. 184-000613	USER NAME = Steve Prange	DESIGNED - SJP	REVISED -	LakeCounty Division of Transportation	I.D.O.T. STANDARD DRAWINGS
		DRAWN - SJP	REVISED -		
	PLOT SCALE = 20.0000 ' / IN.	CHECKED - KDN	REVISED -		
	PLOT DATE = 05/29/09	DATE - 05/29/09	REVISED -		SCALE: N.T.S. SHEET NO. 11 OF 14 SHEETS STA. N/A TO STA. N/A

F.A. RTE.	SECTION	COUNTY	TOTAL SHEETS	SHEET NO.
1016	02-00110-12-WR	LAKE	206	195
		CONTRACT NO. 63209		
FED. ROAD DIST. NO. 1	ILLINOIS	FED. AID PROJECT		