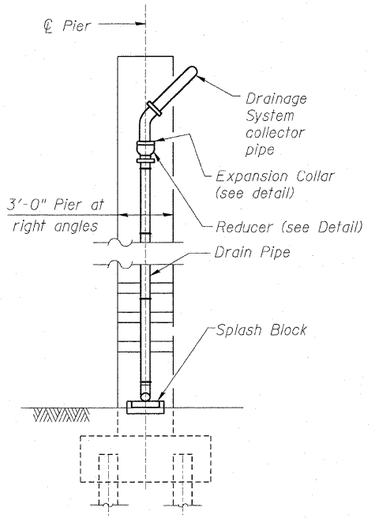

SIDE VIEW
(Looking South)

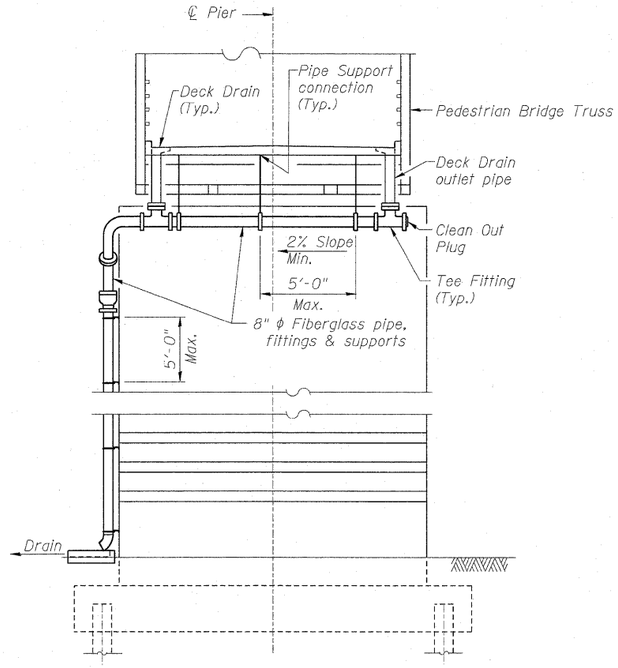

DRAINAGE SYSTEM AT PIER 4 & 7
(Looking East)

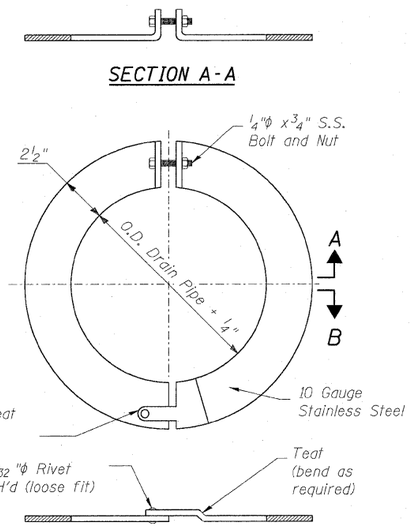

DETAIL OF EXPANSION COLLAR

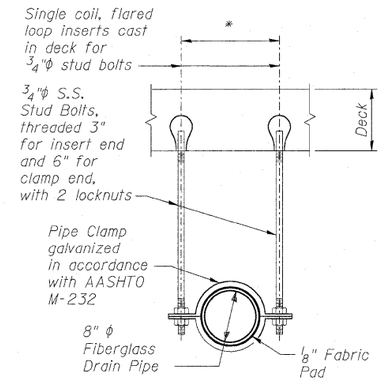

PIPE SUPPORT DETAIL
* Dimension as required by Pipe Clamp

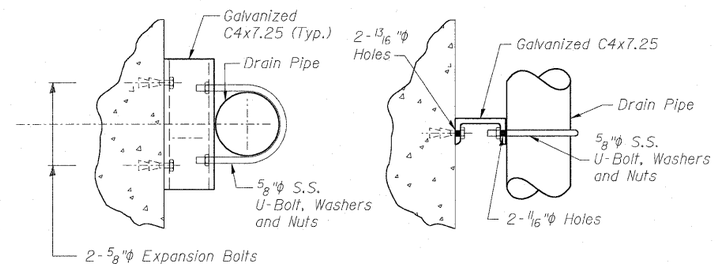

PLAN
ELEVATION
PIPE SUPPORT DETAIL

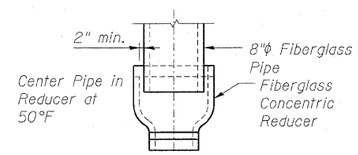

REDUCER DETAIL

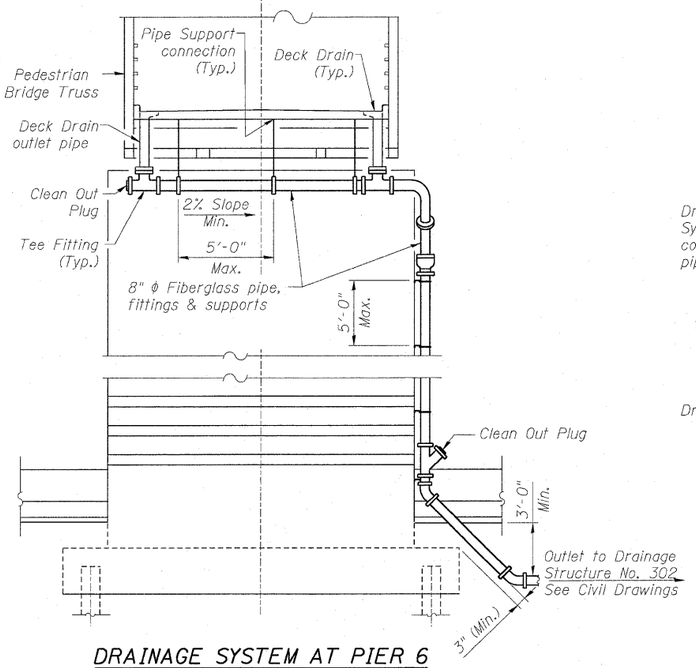

DRAINAGE SYSTEM AT PIER 6
(Looking East)

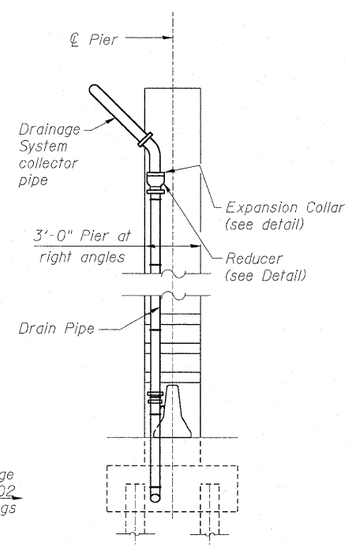

SIDE VIEW
(Looking North)

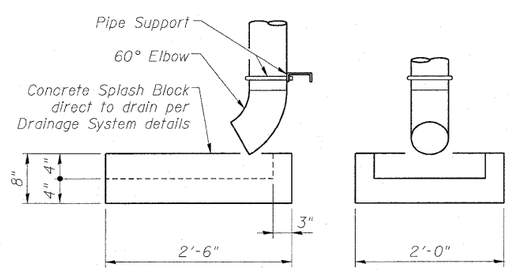

DETAIL OF SPLASH BLOCK

NOTE:
1. S.S. denotes Stainless Steel.
2. Work shall be according to Special Provision "Drainage System".
3. See Sheet PB-1 & PB-2 for location of Deck Drains.

BILL OF MATERIAL

Item	Unit	Total
Drainage System	L Sum	1

Sheet PB-19 of 25

FILE NAME = 082-0394_76C47_S19_DRN-01.dgn	USER NAME = bhatta	DESIGNED - DD	REVISED -
		DRAWN - MK	REVISED -
	PLOT SCALE = 01 '=' / IN.	CHECKED - ATB	REVISED -
	PLOT DATE = 6/15/2009	DATE - 05/01/09	REVISED -

STATE OF ILLINOIS
DEPARTMENT OF TRANSPORTATION

DRAINAGE SYSTEM DETAILS
STRUCTURE NO. 082-0394

SCALE: | SHEET NO. OF SHEETS | STA. TO STA.

F.A. RTE.	SECTION	COUNTY	TOTAL SHEETS	SHEET NO.
64	82-1-1HBR	ST. CLAIR	93	60
		CONTRACT NO. 76C47		

FED. ROAD DIST. NO. | ILLINOIS | FED. AID PROJECT