STATE OF ILLINOIS
DEPARTMENT OF TRANSPORTATION

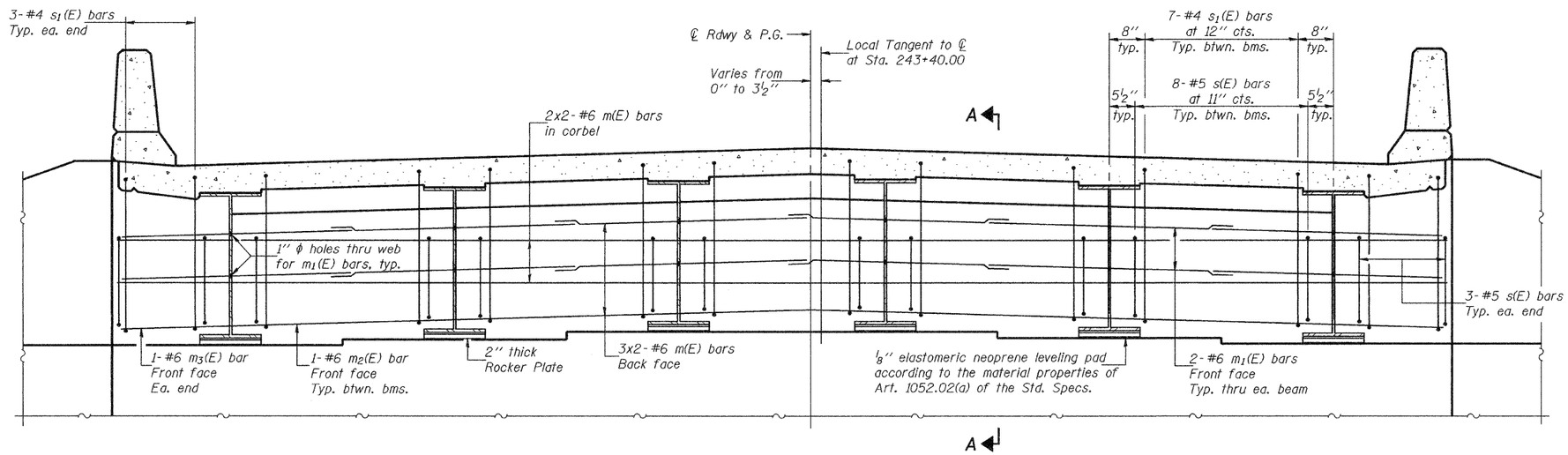

DIAPHRAGM ELEVATION AT ABUTMENT

(West Abut. shown, looking West - East Abut. similar)

MIN. BAR LAP

#6 bar = 2'-9''

Notes: Reinforcement bars in diaphragm are billed with superstructure on sheet 8 of 22.
Concrete in diaphragm is included with Concrete Superstructure on sheet 8 of 22.
For details of bars s(E) & s_1(E) see sheet 8 of 22.
Bars indicated thus 2 x 6-#6 etc. indicated 2 lines of bars with 6 lengths per line.
See sheet 14 of 22 for bar splicer details.
See sheet 13 of 22 for holes thru webs for m_1(E) bars.

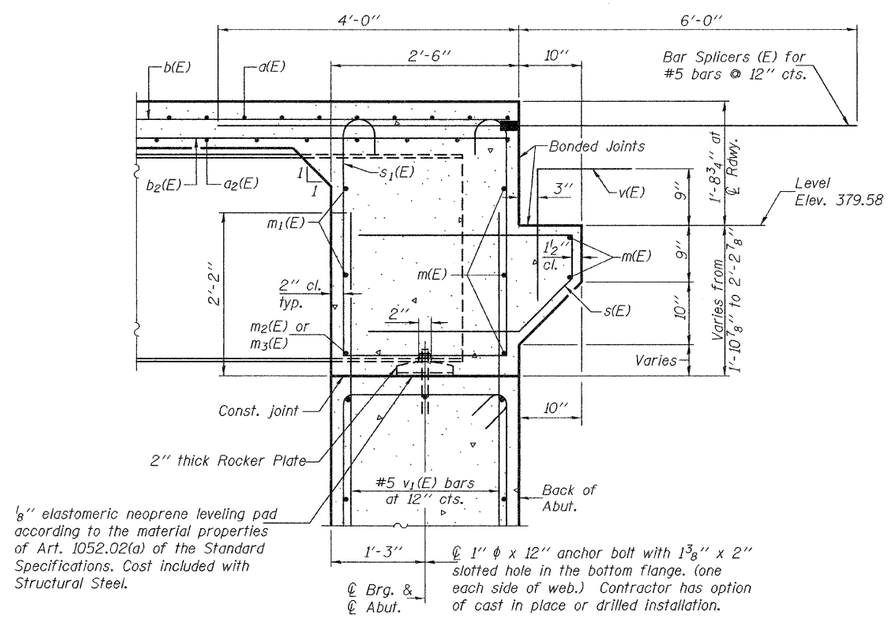

SECTION A-A

DIAPHRAGM DETAILS
STRUCTURE NO. 039-0070 (E.B.)

DESIGNED	Rebecca Mitchell		
CHECKED	Mark D. Shaffer		
DRAWN	©MG Amber Seiber htd		
CHECKED	RLM/MDS		

July 27, 2009
EXAMINED Thomas J. Domagalski
ENGINEER OF BRIDGE DESIGN
PASSED Ralph E. Anderson
ENGINEER OF BRIDGES AND STRUCTURES

SHEET NO. 9	F.A.P. RTE.	SECTION	COUNTY	TOTAL SHEETS	SHEET NO.
22 SHEETS	331	(12-BY-1)-1	JACKSON	67	30
			CONTRACT NO. 98641		
	FED. ROAD DIST. NO. _	ILLINOIS	FED. AID PROJECT		

0390070-98641.dgn 07/27/2009 10:27:57 AM