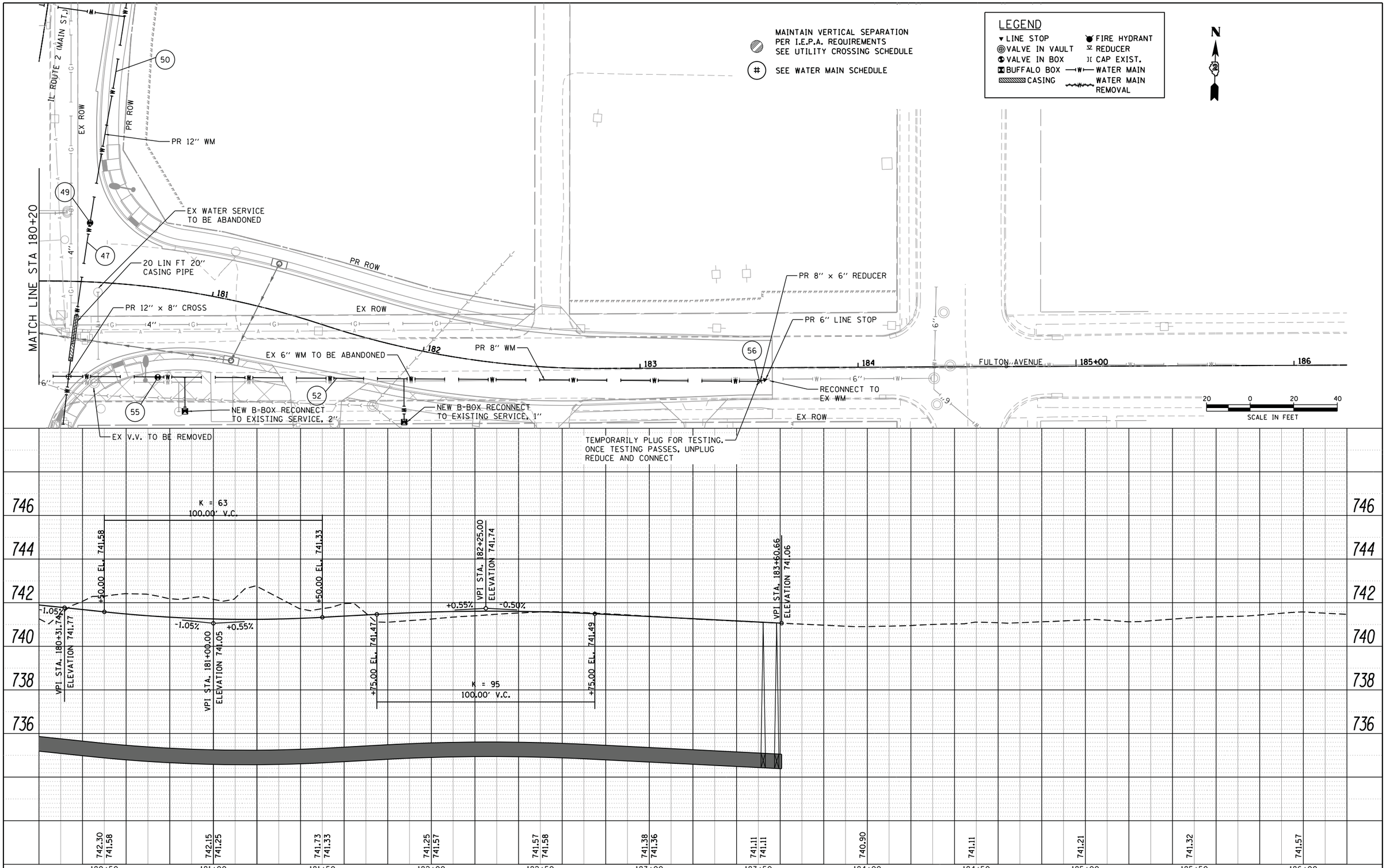

PLAN	BY	DATE
SURVEYED		
PLOTTED		
ALIGNMENT CHECKED		
RT. OF WAY CHECKED		
CADD FILE NAME		
NOTE BOOK NO.		

PROFILE	BY	DATE
SURVEYED		
PLOTTED		
GRADES CHECKED		
B.M. NOTED		
STRUCTURE NOTATNS CHKD		
NOTE BOOK NO.		

COMPANY NAME: HRGreen.com
PROJECT CONTACT: Illinois Professional Design Firm # 184-001322
DATE PLOTTED: 3/10/2015
FILE NAME: z05006-sh120-plnprf-watermain.dgn
PLOT DRIVER: ILDOT.pdf.no.levels.pltcfg
PEN TABLE: Struct 22x34.tbl

HRGreen

USER NAME = whood	DESIGNED - CJP	REVISED -
	DRAWN - WJH	REVISED -
PLOT SCALE =	CHECKED - DVC	REVISED -
PLOT DATE = 3/10/2015	DATE -	REVISED -

STATE OF ILLINOIS
DEPARTMENT OF TRANSPORTATION

FULTON AVENUE (2 OF 2)
WATER MAIN REPLACEMENT

SCALE: 1" = 20' | SHEET NO. OF SHEETS | STA. 180+20 TO STA. 183+60.66

F.A.P. RTE.	SECTION	COUNTY	TOTAL SHEETS	SHEET NO.
734	78R-2	WINNEBAGO	926	501

CONTRACT NO.

FED. ROAD DIST. NO. | ILLINOIS | FED. AID PROJECT

MAINTAIN VERTICAL SEPARATION PER I.E.P.A. REQUIREMENTS SEE UTILITY CROSSING SCHEDULE

(#) SEE WATER MAIN SCHEDULE

LEGEND

- LINE STOP
- VALVE IN VAULT
- VALVE IN BOX
- BUFFALO BOX
- CASING
- FIRE HYDRANT
- REDUCER
- CAP EXIST.
- WATER MAIN
- WATER MAIN REMOVAL

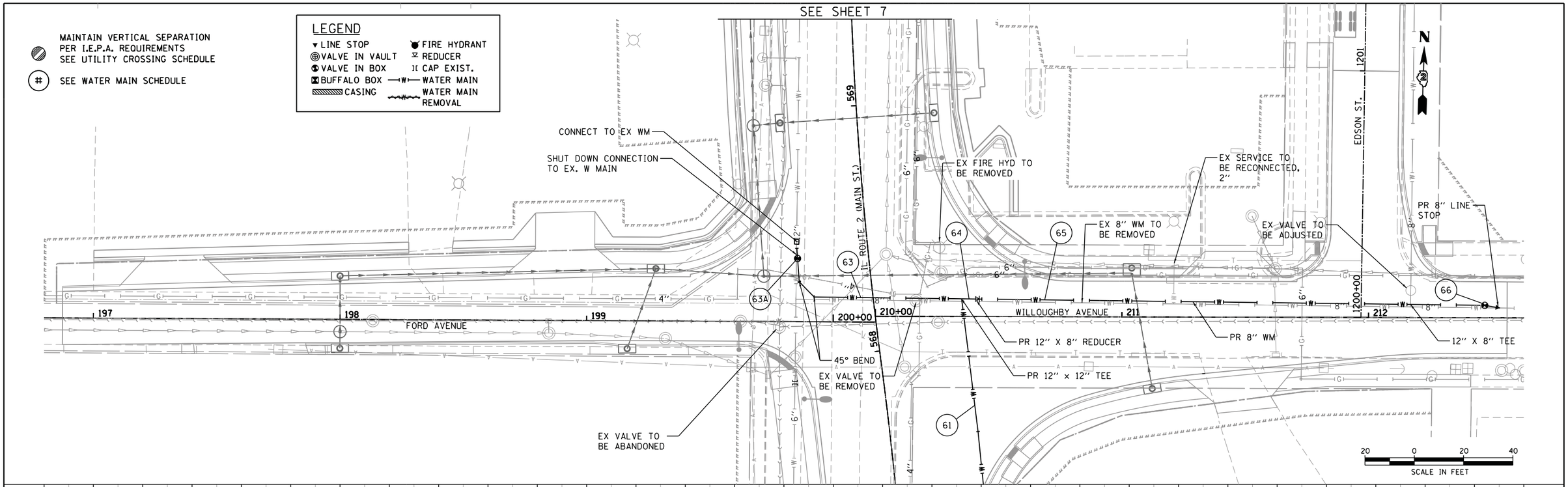

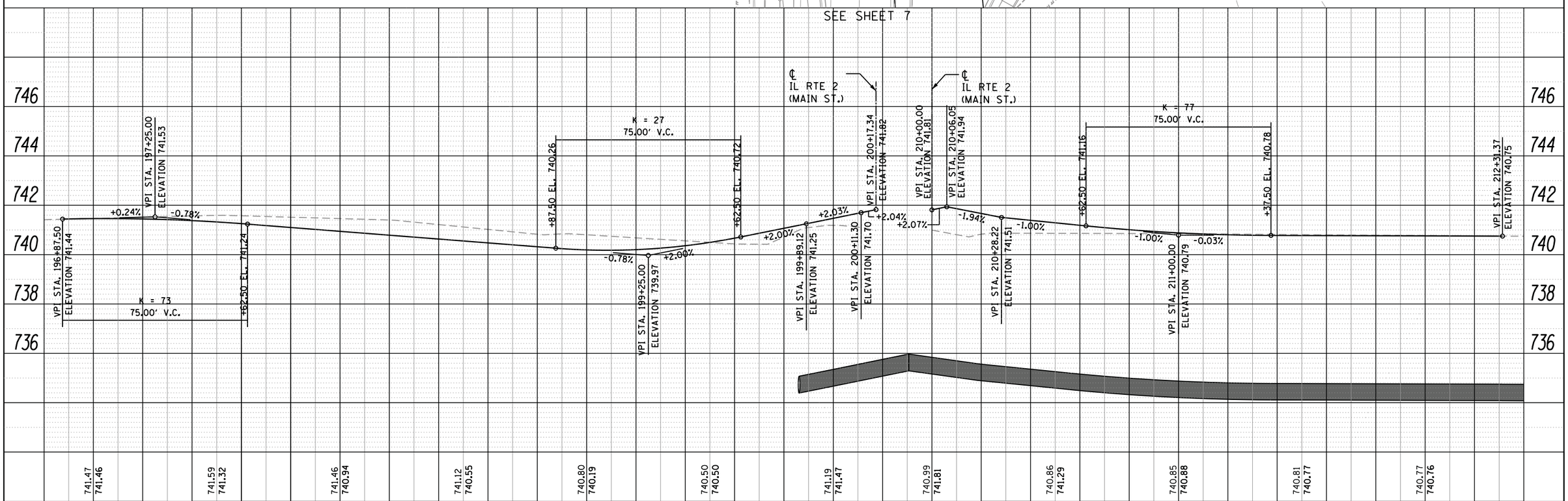

PLAN	BY	DATE
SURVEYED		
PLOTTED		
ALIGNMENT CHECKED		
RT. OF WAY CHECKED		
CADD FILE NAME		
NOTE BOOK NO.		

PROFILE	BY	DATE
SURVEYED		
PLOTTED		
GRADES CHECKED		
BLM. NOTED		
STRUCTURE NOTATNS CHKD		
NOTE BOOK NO.		

COMPANY NAME: #COMPANY_NAME#
PROJECT CONTACT: DAVE VAN CAMP
CITE ENGINEER: CITY ENGINEER P.E.
DATE PLOTTED: 3/10/2015 8:29:37 AM
FILE NAME: z05006-sh121-phpr-f-watermain.dgn
PLOT DRIVER: ILDOT.pdf.no.levels.pltcfg
PEN TABLE: Struct 22x34.tbl

HRGreen.com
Illinois Professional Design Firm # 184-001322

USER NAME = whood	DESIGNED - CJP	REVISED -	
	DRAWN - WJH	REVISED -	
PLOT SCALE =	CHECKED - DVC	REVISED -	
PLOT DATE = 3/10/2015	DATE -	REVISED -	

STATE OF ILLINOIS
DEPARTMENT OF TRANSPORTATION

FORD AVENUE /WILLOUGHBY AVENUE
WATER MAIN REPLACEMENT

SCALE: 1" = 20' | SHEET NO. OF SHEETS | STA. 196+87.50 TO STA. 212+31.37

F.A.P. RTE.	SECTION	COUNTY	TOTAL SHEETS	SHEET NO.
734	78R-2	WINNEBAGO	926	502
		CONTRACT NO.		
FED. ROAD DIST. NO.	ILLINOIS	FED. AID PROJECT		

MAINTAIN VERTICAL SEPARATION
PER I.E.P.A. REQUIREMENTS
SEE UTILITY CROSSING SCHEDULE

(#) SEE WATER MAIN SCHEDULE

LEGEND

- LINE STOP
- VALVE IN VAULT
- VALVE IN BOX
- BUFFALO BOX
- CASING
- FIRE HYDRANT
- REDUCER
- CAP EXIST.
- W WATER MAIN
- WATER MAIN REMOVAL

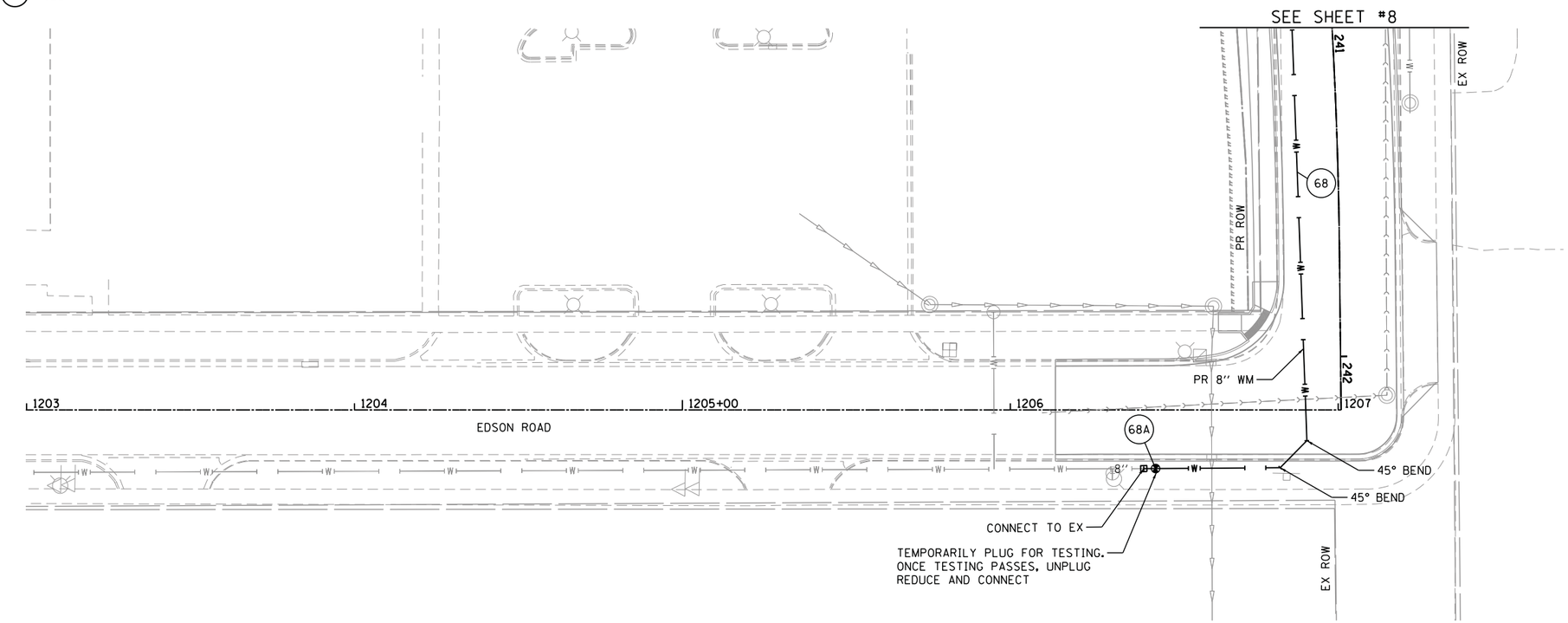

20 0 20 40
SCALE IN FEET

N

PLAN	BY	DATE
SURVEYED		
PLOTTED		
ALIGNMENT CHECKED		
RT. OF WAY CHECKED		
CADD FILE NAME		
NOTE BOOK NO.		

PROFILE	BY	DATE
SURVEYED		
PLOTTED		
GRADES CHECKED		
B.M. NOTED		
STRUCTURE NOTAT'NS CH'KD		
NOTE BOOK NO.		

742 740 738 736 734 732

COMPANY NAME: $COMPANY_NAME$
PROJECT CONTACT: DAVE VAN CAMP
CLIENT: CITY OF ROCKFORD
DATE PLOTTED: 3/10/2015 8:29:19 AM
FILE NAME: Z05006-sh122-pkpr-f-watermain.dgn
PLOT DRIVER: ILDOT_pdf_no_levels.pltcfg
PEN TABLE: Struct 22x34.tbl

HRGreen.com
Illinois Professional Design Firm
184-001322
HRGreen

USER NAME = whood	DESIGNED - CJP	REVISED -	
	DRAWN - WJH	REVISED -	
PLOT SCALE =	CHECKED - DVC	REVISED -	
PLOT DATE = 3/10/2015	DATE -	REVISED -	

STATE OF ILLINOIS
DEPARTMENT OF TRANSPORTATION

EDSON ROAD
WATER MAIN REPLACEMENT

SCALE: 1" = 20' | SHEET NO. OF SHEETS | STA. TO STA.

F.A.P. RTE.	SECTION	COUNTY	TOTAL SHEETS	SHEET NO.
734	78R-2	WINNEBAGO	926	503
		CONTRACT NO.		

FED. ROAD DIST. NO. | ILLINOIS | FED. AID PROJECT

SEE SHEET 14

EX V.V. TO BE REPLACED
• SHOULD FRAME FALL WITHIN PROPOSED CURBLINE, REPLACE VAULT WITH VALVE BOX.

MAINTAIN VERTICAL SEPARATION PER I.E.P.A. REQUIREMENTS SEE UTILITY CROSSING SCHEDULE

(#) SEE WATER MAIN SCHEDULE

LEGEND
- LINE STOP
- VALVE IN VAULT
- VALVE IN BOX
- BUFFALO BOX
- CASING
- FIRE HYDRANT
- REDUCER
- CAP EXIST.
- WATER MAIN
- WATER MAIN REMOVAL

EX ROW
PR ROW
IL ROUTE 2 (MAIN ST.)
HALSTED ROAD
337 338 339 340+00 341 342 343
608
607
12" 6" 8" 2"

20 0 20 40
SCALE IN FEET

N

SEE SHEET 14
℄ IL RTE 2 (MAIN ST.)

VPI STA. 338+08.40
ELEVATION 755.18

+0.35%

VPI STA. 339+70.00
ELEVATION 755.75

+1.00%

VPI STA. 339+94.00
ELEVATION 755.99

+1.00%

VPI STA. 340+00.00
ELEVATION 756.05

+1.00%

VPI STA. 340+06.00
ELEVATION 756.11

-1.00%

VPI STA. 340+30.00
ELEVATION 755.87

-2.00%

+75.00 EL. 754.97

K = 95
100.00' V.C.

-2.00%

VPI STA. 341+25.00
ELEVATION 753.97

-0.95%

+75.00 EL. 753.50

VPI STA. 341+77.53
ELEVATION 753.47

760 758 756 754 752 750

755.03 755.16 755.30 755.32 755.38 755.50 755.39 755.68 756.14 756.05 754.94 755.47 754.12 754.50 753.75 753.77 753.22 752.68

337+50 338+00 338+50 339+00 339+50 340+00 340+50 341+00 341+50 342+00 342+50

PLAN	BY	DATE
SURVEYED		
PLOTTED		
ALIGNMENT CHECKED		
RT. OF WAY CHECKED		
CADD FILE NAME		
NOTE BOOK NO.		

PROFILE	BY	DATE
SURVEYED		
PLOTTED		
GRADES CHECKED		
BLM. NOTED		
STRUCTURE NOTATNS CHKD		
NOTE BOOK NO.		

COMPANY NAME: #COMPANY_NAME#
PROJECT CONTACT: DAVE VAN CAMP
CITY, ST, ZIP: CITY, ROCKFORD, IL
DATE PLOTTED: 3/10/2015 8:29:43 AM
FILE NAME: Z05006-sh123-phase-f-watermain.dgn
PLOT DRIVER: ILD01.pdf, no_levels, pltcfg
PEN TABLE: Struct 22x34.tbl

HRGreen
HRGreen.com
Illinois Professional Design Firm # 184-001322

USER NAME = whood	DESIGNED - CJP	REVISED -
	DRAWN - WJH	REVISED -
PLOT SCALE =	CHECKED - DVC	REVISED -
PLOT DATE = 3/10/2015	DATE -	REVISED -

STATE OF ILLINOIS
DEPARTMENT OF TRANSPORTATION

HALSTED ROAD
WATER MAIN REPLACEMENT

SCALE: 1" = 20' | SHEET NO. OF SHEETS | STA. TO STA.

F.A.P. RTE.	SECTION	COUNTY	TOTAL SHEETS	SHEET NO.
734	78R-2	WINNEBAGO	926	504
		CONTRACT NO.		
FED. ROAD DIST. NO.	ILLINOIS	FED. AID PROJECT		

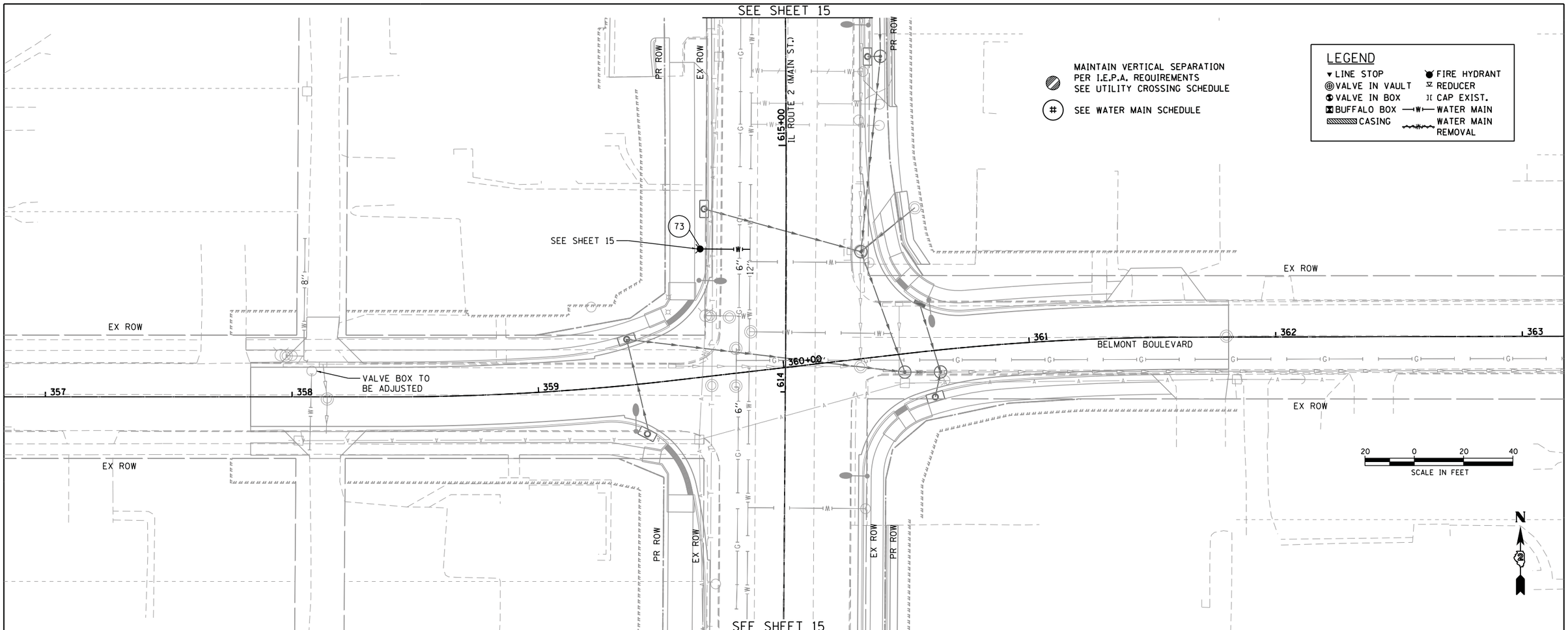

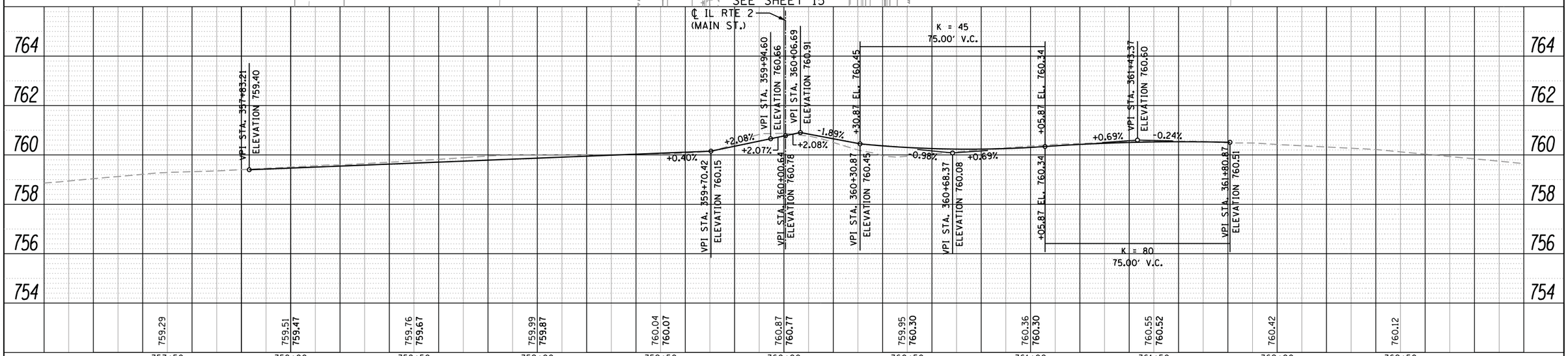

PLAN
NOTE BOOK NO.
SURVEYED
PLOTTED
ALIGNMENT CHECKED
RT. OF WAY CHECKED
CADD FILE NAME
BY
DATE

PROFILE
NOTE BOOK NO.
SURVEYED
PLOTTED
GRADES CHECKED
B.M. NOTED
STRUCTURE NOTATNS CHKD
BY
DATE

COMPANY NAME: #COMPANY_NAME#
PROJECT CONTACT: DAVE VAN HAMME
CLIENT: CITY OF ROCKFORD P.E.
DATE PLOTTED: 3/10/2015 8:29:46 AM
FILE NAME: Z0500E-sn124-phase1-watermain.dgn
PLOT DRIVER: ILDOT_pdf_no_levels.pltcfg
PEN TABLE: Struct 22x34.tbl

HRGreen
HRGreen.com
Illinois Professional Design Firm
184-001322

USER NAME = whood	DESIGNED - CJP	REVISED -
	DRAWN - WJH	REVISED -
PLOT SCALE =	CHECKED - DVC	REVISED -
PLOT DATE = 3/10/2015	DATE -	REVISED -

STATE OF ILLINOIS
DEPARTMENT OF TRANSPORTATION

BELMONT BOULEVARD
WATER MAIN REPLACEMENT

SCALE: 1" = 20' | SHEET NO. OF SHEETS | STA. TO STA.

F.A.P. RTE.	SECTION	COUNTY	TOTAL SHEETS	SHEET NO.
734	78R-2	WINNEBAGO	926	505
		CONTRACT NO.		
FED. ROAD DIST. NO.	ILLINOIS	FED. AID PROJECT		

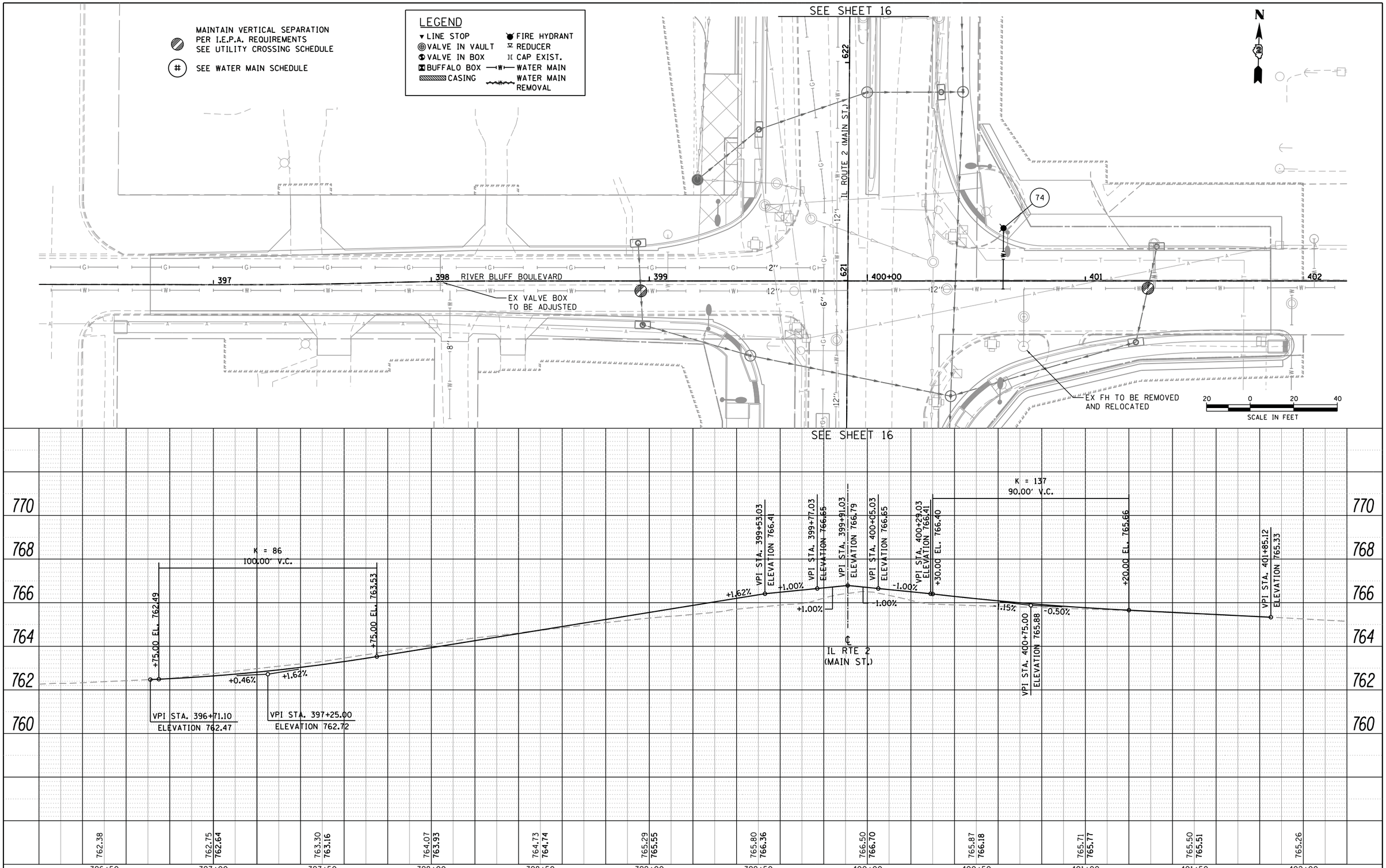

PLAN — SURVEYED / PLOTTED / ALIGNMENT CHECKED / RT. OF WAY CHECKED / CADD FILE NAME — NOTE BOOK NO. ____ — BY — DATE

PROFILE — SURVEYED / PLOTTED / GRADES CHECKED / BLM. NOTED / STRUCTURE NOTATNS CHKD — NOTE BOOK NO. ____ — BY — DATE

COMPANY NAME: #COMPANY_NAME#
PROJECT CONTACT: DAVE VAN CAMP
CREATED BY: Rob Robinson P.E.
DATE PLOTTED: 3/10/2015 8:29:50 AM
FILE NAME: z05006-sh125-plnprf-watermain.dgn
PLOT DRIVER: ILDOT.pdf.no.levels.pltcfg
PEN TABLE: Struct 22x34.tbl

HRGreen.com
Illinois Professional Design Firm # 184-001322

USER NAME = whood	DESIGNED - CJP	REVISED -
	DRAWN - WJH	REVISED -
PLOT SCALE =	CHECKED - DVC	REVISED -
PLOT DATE = 3/10/2015	DATE -	REVISED -

STATE OF ILLINOIS
DEPARTMENT OF TRANSPORTATION

RIVER BLUFF BOULEVARD
WATER MAIN REPLACEMENT

SCALE: 1" = 20' | SHEET NO. OF SHEETS | STA. 396+71.10 TO STA. 401+85.12

F.A.P. RTE.	SECTION	COUNTY	TOTAL SHEETS	SHEET NO.
734	78R-2	WINNEBAGO	926	506
		CONTRACT NO.		
FED. ROAD DIST. NO.	ILLINOIS	FED. AID PROJECT		

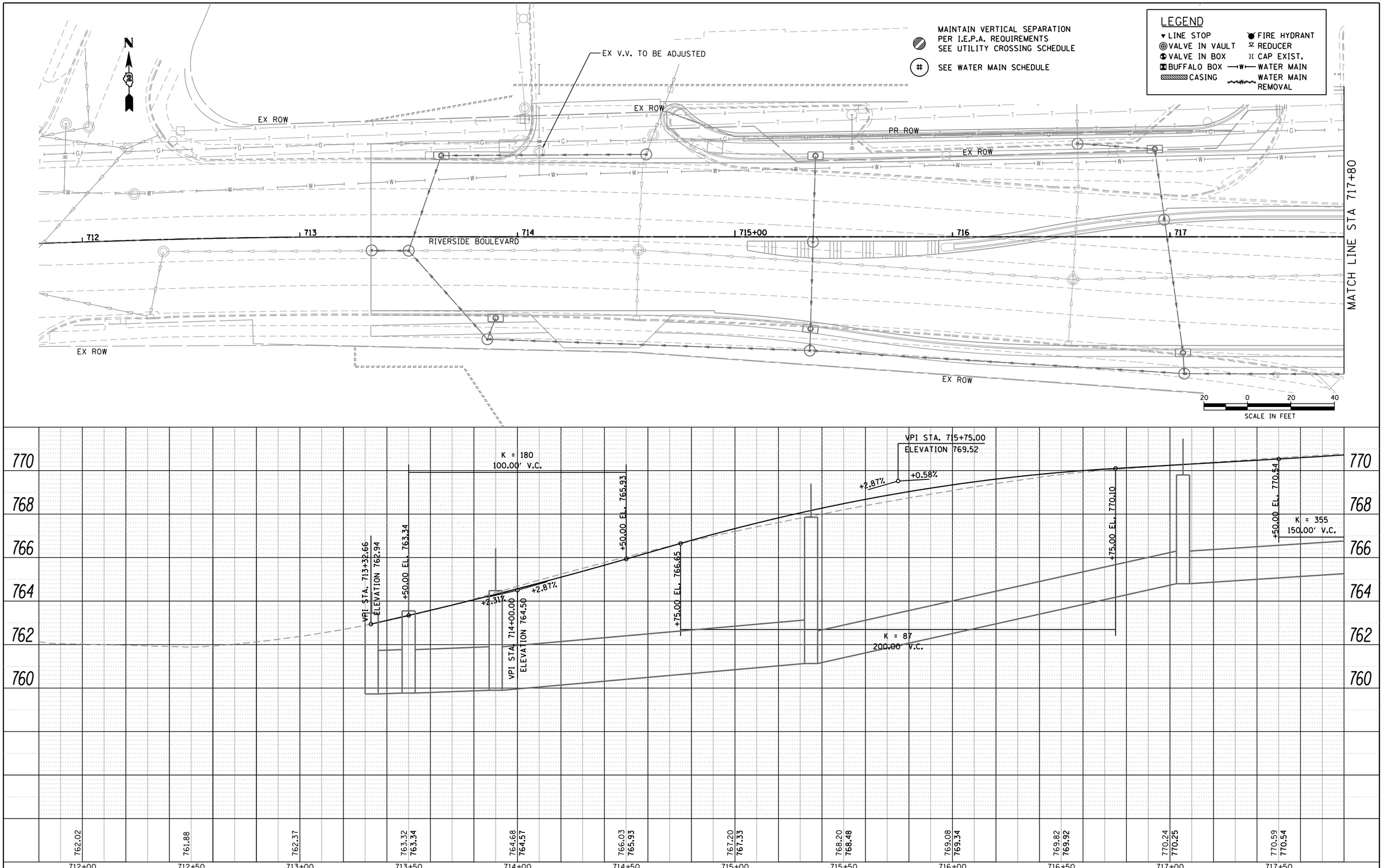

PLAN	BY	DATE
SURVEYED		
PLOTTED		
ALIGNMENT CHECKED		
RT. OF WAY CHECKED		
CADD FILE NAME		
NOTE BOOK NO.		

PROFILE	BY	DATE
SURVEYED		
PLOTTED		
GRADES CHECKED		
B.M. NOTED		
STRUCTURE NOTAT'NS CH'KD		
NOTE BOOK NO.		

COMPANY NAME: $COMPANY_NAME$
PROJECT CONTACT: DAVE VAN DAMME, P.E.
CHART NAME: CITY OF ROCKFORD
DATE PLOTTED: 3/10/2015 8:29:55 AM
FILE NAME: z05006-sh126-phpr-f-watermain.dgn
PLOT DRIVER: ILDOT.pdf.no.levels.pltcfg
PEN TABLE: Struct 22x34.tbl

HRGreen
HRGreen.com
Illinois Professional Design Firm # 184-001322

USER NAME = whood	DESIGNED - CJP	REVISED -	
	DRAWN - WJH	REVISED -	
PLOT SCALE =	CHECKED - DVC	REVISED -	
PLOT DATE = 3/10/2015	DATE -	REVISED -	

STATE OF ILLINOIS
DEPARTMENT OF TRANSPORTATION

RIVERSIDE BOULEVARD (1 OF 3)
WATER MAIN REPLACEMENT

SCALE: 1" = 20' | SHEET NO. OF SHEETS | STA. 713+32.66 TO STA. 717+80

F.A.P. RTE.	SECTION	COUNTY	TOTAL SHEETS	SHEET NO.
734	78R-2	WINNEBAGO	926	507
		CONTRACT NO.		
FED. ROAD DIST. NO.	ILLINOIS	FED. AID PROJECT		

MAINTAIN VERTICAL SEPARATION PER I.E.P.A. REQUIREMENTS SEE UTILITY CROSSING SCHEDULE

(#) SEE WATER MAIN SCHEDULE

LEGEND

- LINE STOP
- VALVE IN VAULT
- VALVE IN BOX
- BUFFALO BOX
- CASING
- FIRE HYDRANT
- REDUCER
- CAP EXIST.
- WATER MAIN
- WATER MAIN REMOVAL

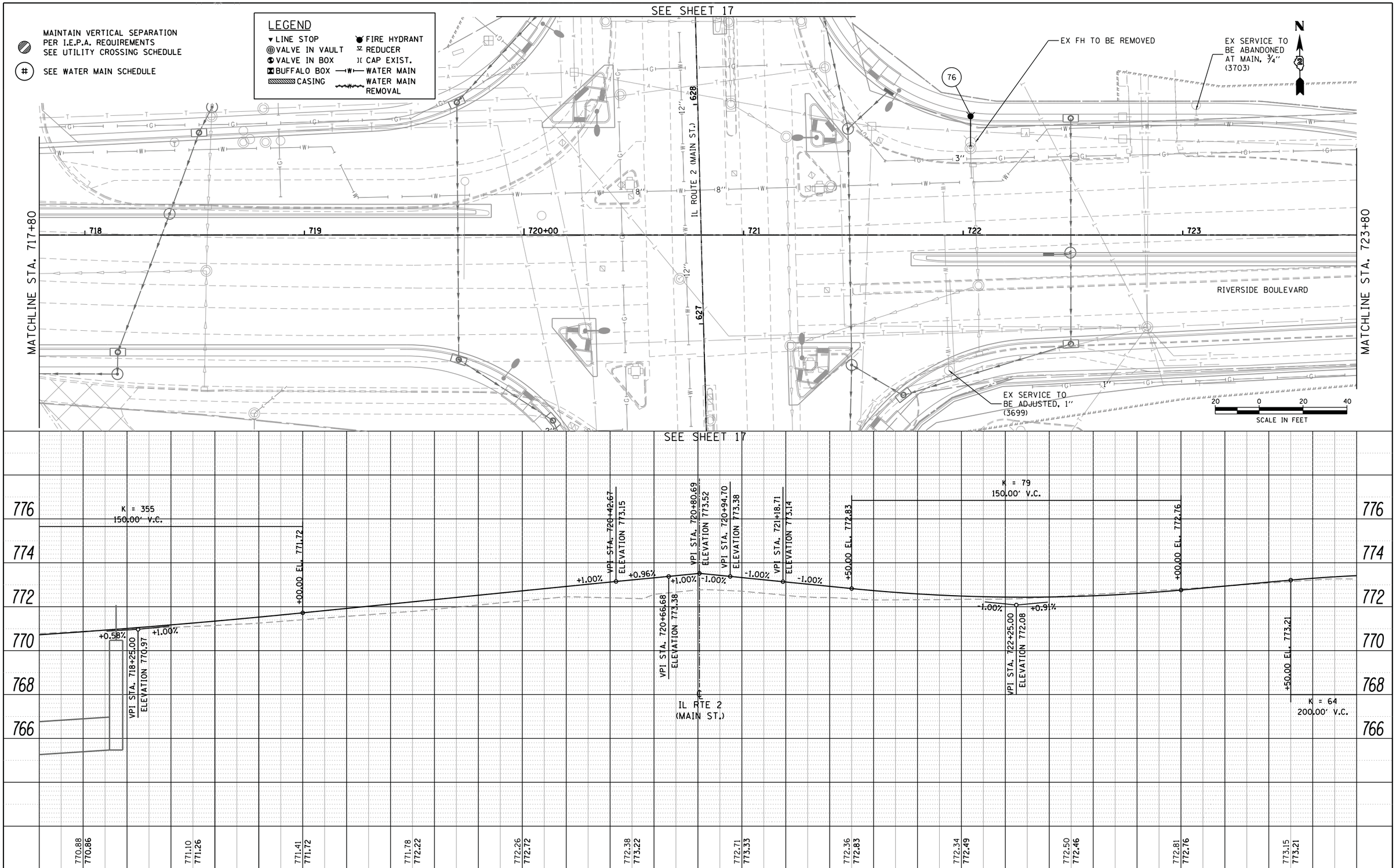

PLAN	BY	DATE
SURVEYED		
PLOTTED		
ALIGNMENT CHECKED		
RT. OF WAY CHECKED		
CADD FILE NAME		
NOTE BOOK NO.		

PROFILE	BY	DATE
SURVEYED		
PLOTTED		
GRADES CHECKED		
B.M. NOTED		
STRUCTURE NOTATNS CHKD		
NOTE BOOK NO.		

COMPANY NAME: HRGreen
PROJECT CONTACT: DAVE VAN ZEMP
ENGINEER: DAVE VAN ZEMP, P.E.
DATE PLOTTED: 3/10/2015 8:30:00 AM
FILE NAME: z05006-sht27-plprf-watermain.dgn
PLOT DRIVER: ILD01.pdf, no-levels, plotcfg
PEN TABLE: Struct 22x34.tbl

HRGreen.com
Illinois Professional Design Firm # 184-001322

USER NAME = whood	DESIGNED - CJP	REVISED -	
	DRAWN - WJH	REVISED -	
PLOT SCALE =	CHECKED - DVC	REVISED -	
PLOT DATE = 3/10/2015	DATE -	REVISED -	

STATE OF ILLINOIS
DEPARTMENT OF TRANSPORTATION

RIVERSIDE BOULEVARD (2 OF 3)
WATER MAIN REPLACEMENT

SCALE: 1" = 20' | SHEET NO. OF SHEETS | STA. 717+80 TO STA. 723+80

F.A.P. RTE.	SECTION	COUNTY	TOTAL SHEETS	SHEET NO.
734	78R-2	WINNEBAGO	926	508
		CONTRACT NO.		

FED. ROAD DIST. NO. | ILLINOIS | FED. AID PROJECT

MAINTAIN VERTICAL SEPARATION PER I.E.P.A. REQUIREMENTS SEE UTILITY CROSSING SCHEDULE

SEE WATER MAIN SCHEDULE

LEGEND

- LINE STOP
- VALVE IN VAULT
- VALVE IN BOX
- BUFFALO BOX
- CASING
- FIRE HYDRANT
- REDUCER
- CAP EXIST.
- WATER MAIN
- WATER MAIN REMOVAL

EX BRICK V.V. TO BE REBUILT
REPLACE CASTING

MATCHLINE STA. 723+80

ROBEY AVE.

NORMANDY AVE.

MATCHLINE STA. 729+50

RIVERSIDE BOULEVARD

724 | 725+00 | 726 | 727 | 728 | 729

900+00 | 901 | 1000+00 | 1001

8"

SCALE IN FEET: 20 0 20 40

VPI STA. 724+50.00
ELEVATION 774.12

+0.91% -2.20%

K = 64
200.00' V.C.

+50.00 EL. 771.92

+50.00 EL. 767.52

K = 126
150.00' V.C.

-2.20% -1.01%

VPI STA. 728+25.00
ELEVATION 765.87

+00.00 EL. 765.11

VPI STA. 729+14.04
ELEVATION 764.97

774 772 770 768 766 764 762 760

773.25 773.47 | 773.09 773.34 | 772.65 772.83 | 771.74 771.92 | 770.74 770.82 | 769.69 769.72 | 768.50 768.62 | 767.41 767.52 | 766.44 766.52 | 765.68 765.72 | 765.12 765.11 | 764.68

724+00 | 724+50 | 725+00 | 725+50 | 726+00 | 726+50 | 727+00 | 727+50 | 728+00 | 728+50 | 729+00 | 729+50

PLAN	BY	DATE
SURVEYED		
PLOTTED		
ALIGNMENT CHECKED		
RT. OF WAY CHECKED		
CADD FILE NAME		
NOTE BOOK NO.		

PROFILE	BY	DATE
SURVEYED		
PLOTTED		
GRADES CHECKED		
BLM. NOTED		
STRUCTURE NOTATNS CHKD		
NOTE BOOK NO.		

COMPANY NAME: #COMPANY_NAME#
PROJECT CONTACT: DAVE VAN CAMP
CLIENT: DAVID C. ROBERTS P.E.
DATE PLOTTED: 3/10/2015 8:30:03 AM
FILE NAME: z05006-sh128-pmar-f-watermain.dgn
PLOT DRIVER: ILDOT.pdf.no.levels.pltcfg
PEN TABLE: Struct 22x34.tbl

HRGreen.com
Illinois Professional Design Firm # 184-001322

USER NAME = whood	DESIGNED - CJP	REVISED -	
	DRAWN - WJH	REVISED -	
PLOT SCALE =	CHECKED - DVC	REVISED -	
PLOT DATE = 3/10/2015	DATE -	REVISED -	

STATE OF ILLINOIS
DEPARTMENT OF TRANSPORTATION

RIVERSIDE BOULEVARD (3 OF 3)
WATER MAIN REPLACEMENT

SCALE: 1" = 20' | SHEET NO. OF SHEETS | STA. 723+80 TO STA. 729+14.04

F.A.P. RTE.	SECTION	COUNTY	TOTAL SHEETS	SHEET NO.
734	78R-2	WINNEBAGO	926	509
		CONTRACT NO.		
FED. ROAD DIST. NO.	ILLINOIS	FED. AID PROJECT		

ITEM	DESCRIPTION	SIZE
A	CORPORATION STOP	¾"–2"
B	CURB STOP	¾"–2"
C	CURB BOX	EXTENDABLE
D	METER STOP	⅝"–2"
E	METER SPREAD	⅝"–2"
F	METER STOP HOUSE SIDE	⅝"–2"
G	BRICK	CEMENT
H	ROD	36"

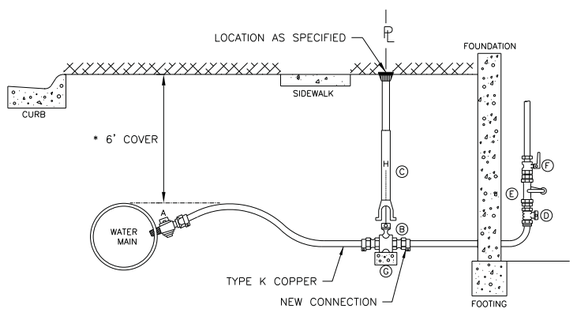

* UNLESS OTHERWISE INDICATED ON PLANS

CITY OF ROCKFORD
WATER SERVICE DETAIL
N.T.S.

DTL–WSER

ALL HYDRANTS TO BE INSTALLED WITH LOCKING COLLARS

ITEM	DESCRIPTION
A	APPROVED BEDDING MATERIAL
B	8"x 4"x 4" CONCRETE BLOCKING 3500 PSI STRENGTH TYPE
C	UNDISTURBED SOIL
D	APPROVED GRANULAR, TRENCH BACKFILL MATERIAL
E	VALVE BOXES WILL BE THE TYLER / UNION CAST IRON 6850 SERIES– WITH DEBRIS CAP & ADAPTER II INSTALLED
F	A WATER PERMEABLE GEOTEXTILE IS TO BE PLACED BETWEEN 1" WASHED STONE AND BACKFILL
G	VALVE AND HYDRANT TO BE BACK FILLED WITH, 1" WASHED STONE MINIMUM OF 24 INCHES IN DEPTH

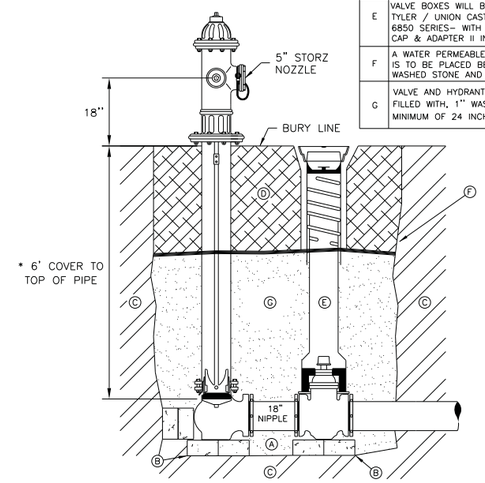

* UNLESS OTHERWISE INDICATED ON PLANS

CITY OF ROCKFORD
FIRE HYDRANT COMPLETE
N.T.S.

DTL–FH

ITEM	DESCRIPTION
A	APPROVED BEDDING MATERIAL
B	16"x8"x4" CONCRETE BLOCKING
C	UNDISTURBED SOIL
D	APPROVED GRANULAR, TRENCH BACKFILL MATERIAL
E	VALVE BOXES WILL BE THE TYLER/UNION CAST IRON 6850 SERIES–WITH DEBRIS CAP & ADAPTER II INSTALLED

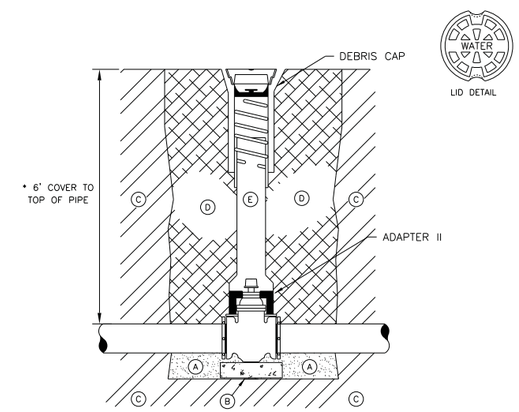

* UNLESS OTHERWISE INDICATED ON PLANS

CITY OF ROCKFORD
VALVE & VALVE BOX DETAIL
N.T.S.

DTL–VB

ITEM	DESCRIPTION
A	SEE FIRE HYDRANT DETAIL SHEET FOR CONSTRUCTION SPECIFICATIONS

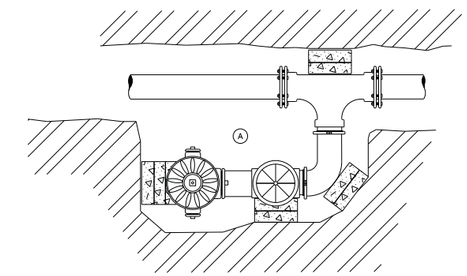

CITY OF ROCKFORD
OFFSET FIRE HYDRANT
COMPLETE WITH ELL
N.T.S.

DTL–FHO

ALL JOINTS WITHIN LENGTH "L" OF FITTING MUST BE RESTRAINED

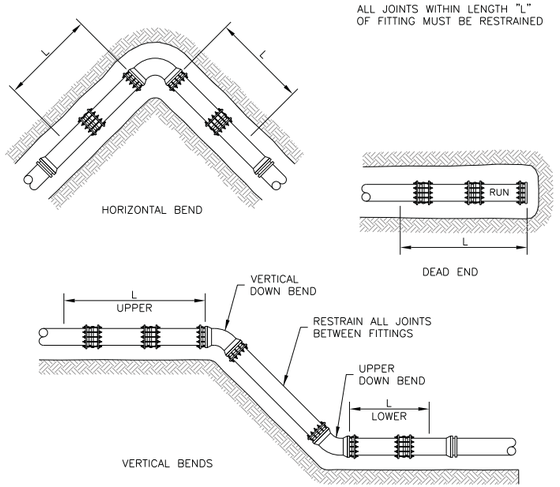

RESTRAINING GLAND RESTRAINT
N.T.S.

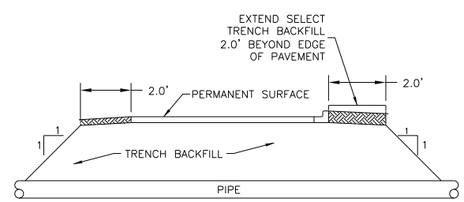

TYPICAL SECTION OF PIPE
CROSSING UNDER PERMANENT SURFACE
N.T.S.

NOTE:
THESE MINIMUM SECTIONS APPLY WHEREVER PIPE IS ADJACENT TO, OR CROSSES UNDER AN EXISTING OR NEW ROADWAY, PARKING LOT, SIDEWALK, DRIVEWAY, STRUCTURE OR PAVEMENT.

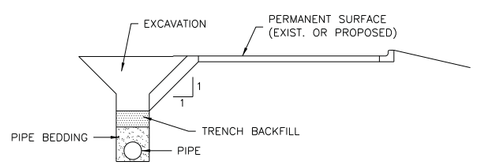

TYPICAL SECTION OF PIPE
PARALLEL TO PERMANENT SURFACE
N.T.S.

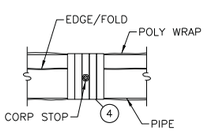

DIRECT TAP WITH POLY WRAP

PIPE DIA. (IN.)	MINIMUM POLY WRAP WIDTH (IN.)	
	FLAT TUBE	SHEET
4	14	28
6	16	32
8	20	40
10	24	48
12	27	54
14	30	60
16	34	68

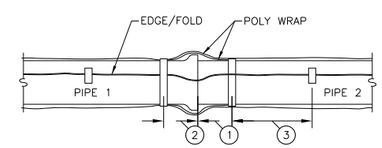

1. EXTEND POLY WRAP FOR PIPE 1 A MINIMUM OF 12" BEYOND BELL ONTO PIPE 2. SECURE TO PIPE 2 WITH TAPE OR PLASTIC TIE STRAPS.

2. EXTEND POLY WRAP FOR PIPE 2 ONTO PIPE 1 A MINIMUM OF 12" BEYOND THE PIPE 1 BELL. INSTALL OVER THE PIPE 1 POLY WRAP AND SECURE THE END WITH TAPE OR PLASTIC TIE STRAPS.

3. SECURE THE CUT EDGE ON POLY SHEETS EVERY 3'–0". SECURE THE FOLD ON POLY TUBES EVERY 4'–0". IF INSTALLED BELOW THE WATER TABLE, SECURE EVERY 2'–0".

4. INSTALL 2 TO 3 WRAPS OF POLYETHYLENE ADHESIVE TAPE COMPLETELY AROUND THE PIPE AND POLY WRAP AT TAPPING LOCATION. MOUNT TAPPING MACHINE OVER THE TAPE AND INSTALL CORPORATION THROUGH THE TAPE AND POLY WRAP. REPAIR ANY DAMAGE TO POLY WRAP IF NEEDED.

5. POLY WRAP SHALL BE A MINIMUM OF 8 MILS THICK AND SHALL BE FURNISHED IN TUBE FORM.

POLY WRAP INSTALLATION AT PIPE JOINTS

POLYETHYLENE ENCASEMENT
(POLY WRAP) INSTALLATION DETAIL
N.T.S.

PIPE DIA. (IN.)	MAX. PAY WIDTH (FT.)
<4	3.00
4	3.33
6	3.58
8	3.78
10	3.97
12	4.17
15	4.46
16	4.56
18	4.75
24	5.33

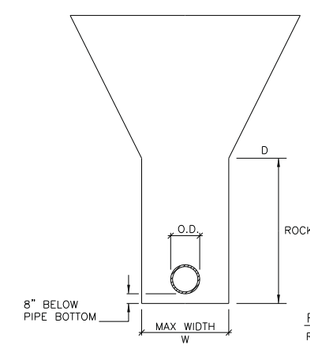

ROCK EXCAVATION

$$\text{ROCK EX. (CY)} = \frac{W \times D \times \text{LENGTH (FT)}}{27}$$

NOTE:
ROCK EXCAVATION WILL BE PAID ON WATER SERVICE AND MAIN CONSTRUCTION WHERE APPLICABLE/SPECIFIED.

ROCK EXCAVATION PAY LIMIT SCHEDULE
N.T.S.

COMPANY NAME: $COMPANY_NAME$
PROJECT CONTACT: DAVE VAN CAMP, P.E.
CLIENT: CITY OF ROCKFORD
DATE PLOTTED: 3/10/2015 8:30:09 AM
FILE NAME: z0506-sh129-det01.dgn
PLOT DRIVER: IL001.pdf,no_levels,pltcfg
PEN TABLE: Struct 22x34.tbl

HRGreen
HRGreen.com
Illinois Professional Design Firm # 184-001322

USER NAME = whood	DESIGNED - CJP	REVISED -	
FILE NAME =	DRAWN - WJH	REVISED -	
PLOT SCALE =	CHECKED - DVC	REVISED -	
PLOT DATE = 3/10/2015	DATE -	REVISED -	

STATE OF ILLINOIS
DEPARTMENT OF TRANSPORATION

IL ROUTE 2 (N. MAIN STREET)
WATER MAIN DETAILS

SCALE: N.T.S. | SHEET NO. OF SHEETS | STA. TO STA.

M.S.	SECTION	COUNTY	TOTAL SHEETS	SHEET NO.
734	78R-2	WINNEBAGO	926	510
		CONTRACT NO.		

FED. ROAD DIST. NO. 2 | ILLINOIS | FED. AID PROJECT

PIPE DIA. (IN.)	MAX. PAY WIDTH (FT.)
<4	3.00
4	3.33
6	3.58
8	3.78
10	3.97
12	4.17
15	4.46
16	4.56
18	4.75
24	5.33

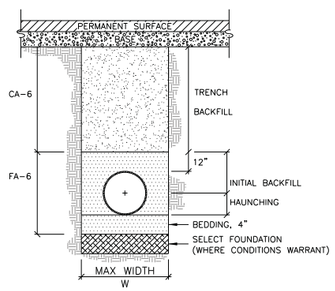

NOTE:
THESE ITEMS WILL BE INCIDENTAL ON WATER SERVICES.
TRENCH BACKFILL SHALL BE MECHANICALLY COMPACTED TO 95% STANDARD PROCTOR OPTIMUM DENSITY.

TRENCH BACKFILL AND SELECT FOUNDATION MATERIAL PAY LIMIT SCHEDULE

N.T.S.

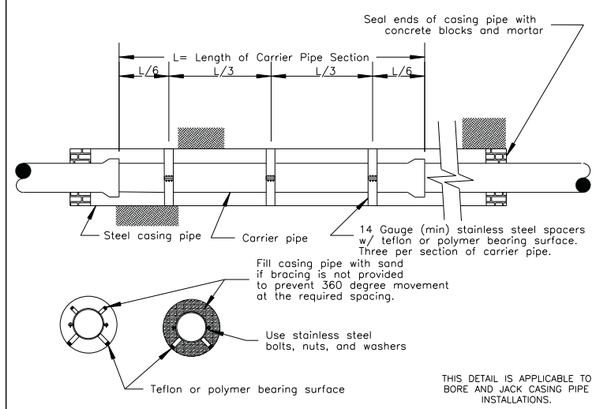

THIS DETAIL IS APPLICABLE TO BORE AND JACK CASING PIPE INSTALLATIONS.

WATER MAIN CASING DETAIL

N.T.S.

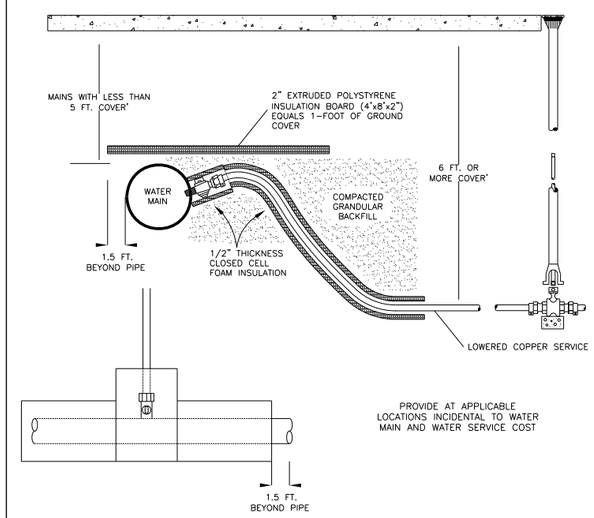

FREEZE PROTECTION

N.T.S.

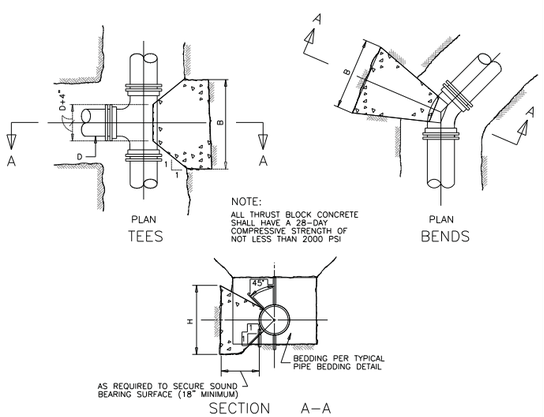

NOTE:
ALL THRUST BLOCK CONCRETE SHALL HAVE A 28-DAY COMPRESSIVE STRENGTH OF NOT LESS THAN 2000 PSI

BENDS AND TEES

*THRUST BLOCK DIMENSION TABLE								
PIPE SIZE	90° BENDS		45° BENDS		22 1/2 ° ELLS 11 1/4 ° ELLS		TEES	
D	H	B	H	B	H	B	H	B
6"	12	24	9	18	7	14	11	22
8"	16	32	12	24	9	18	14	28
10"	20	40	15	30	11	22	17	34
12"	24	48	18	36	13	26	21	42
16"	32	56	26	44	20	34	28	48

*DIMENSIONS SHOWN ARE MINIMUM *DIMENSIONS SHOWN ARE INCHES

THRUST BLOCK DETAILS

N.T.S.

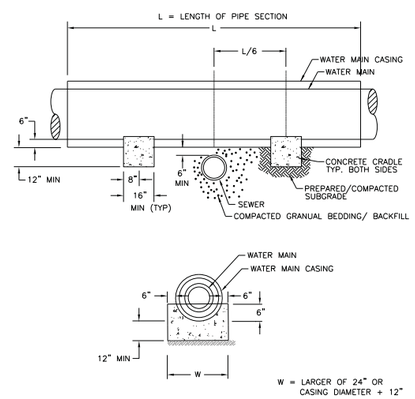

NOTE:

1. CONCRETE CRADLES ARE REQUIRED WHEN WATER MAIN CROSSES OVER SEWER PIPES WITH A VERTICAL CLEARANCE OF LESS THAN 18".
2. CRADLES TO BE BUILT ON UNDISTURBED EARTH PREPARED/COMPACTED TO THE SATISFACTION OF THE ENGINEER.
3. CONCRETE TO BE CLASS SI PER IDOT SECTION 1020.04.
4. CONCRETE CRADLES TO BE MEASURED AND PAID FOR AS CLASS SI CONCRETE (MISCELLANEOUS).

CONCRETE CRADLES

N.T.S.

GENERAL NOTES

1. REQUIREMENTS FOR WATER MAIN VALVE SHUT OFF

a) CONTRACTOR SHALL OBTAIN THE PERMISSION OF THE WATER SUPERINTENDENT, OR HIS DESIGNEE, PRIOR TO ANY WATER MAIN VALVE SHUT OFF.

b) WATER MAIN VALVE SHUT OFF CAN ONLY TAKE PLACE MONDAY THRU THURSDAY, EXCEPT IN CASE OF EMERGENCY, OR BY APPROVAL FROM WATER SUPERINTENDENT OR DESIGNEE.

c) CONTRACTOR SHALL NOTIFY ALL WATER CUSTOMERS AFFECTED BY THE WATER MAIN VALVE SHUT OFF AT LEAST 24 HOURS IN ADVANCE, USING FORMS SUPPLIED BY THE WATER DIVISION.

d) CONTRACTOR SHALL NOTIFY THE WATER DIVISION OPERATIONS CENTER OPERATOR (815-987-5712) PRIOR TO ANY WATER MAIN VALVE SHUT OFF AND PROVIDE THE FOLLOWING INFORMATION (PURSUANT TO ILLINOIS MUNICIPAL CODE 65 ILCS 5/11-20-10.5):

- STREETS AND BOUNDARIES OF SHUT DOWN
- TIME OF SHUT DOWN
- APPROXIMATE DURATION OF SHUT DOWN
- NUMBER OF CUSTOMERS AFFECTED
- IF NON-RESIDENTIAL CUSTOMERS (HOSPITALS, NURSING HOMES, RESTAURANTS, ETC.) ARE AFFECTED, A COUNT OF HOW MANY INDIVIDUALS AFFECTED WILL BE PROVIDED.

e) CONTRACTOR SHALL NOTIFY WATER DIVISION OPERATIONS CENTER OPERATOR UPON COMPLETION OF REPAIRS AND RESTORATION OF WATER SERVICE, AND PROVIDE CHLORINE RESIDUAL.

f) CONTRACTOR SHALL DEMONSTRATE, TO THE SATISFACTION OF THE OWNER, THAT WATER SERVICE AT EACH RESIDENCE OR BUSINESS AFFECTED BY THE SHUTDOWN HAS BEEN RESTORED ONCE THE WATER SERVICE LINE HAS BEEN RECONNECTED.

g) CONTRACTOR SHALL MEET WITH WATER DIVISION PERSONNEL AT LEAST FIVE (5) DAYS PRIOR TO START OF CONSTRUCTION TO COORDINATE EXERCISING VALVES AND DETERMINING VALVE SHUT OFF PATTERNS DURING CONSTRUCTION. THE SHUTDOWN SHALL BE ALLOWED TO PROCEED ONLY AFTER THE WATER DIVISION REPRESENTATIVE HAS DETERMINED THAT THE REQUIRED VALVES ARE FUNCTIONING. THE CONTRACTOR SHALL BE RESPONSIBLE FOR TURNING VALVES ON AND OFF DURING CONSTRUCTION AND ACCEPTS THE RESPONSIBILITY FOR ANY AND ALL DAMAGE TO CITY PROPERTY DURING CONSTRUCTION.

h) ALL COSTS OF WORK ASSOCIATED WITH SCHEDULED WATER MAIN VALVE SHUT OFF SHALL BE INCLUDED IN THE INDIVIDUAL BID ITEMS AND NO ADDITIONAL COMPENSATION SHALL BE ALLOWED.

2. REQUIREMENTS FOR UNSCHEDULED (EMERGENCY) WATER MAIN VALVE SHUT OFF:

a) IN THE EVENT THE CONTRACTOR MUST PERFORM AN UNSCHEDULED WATER MAIN VALVE SHUT OFF; THE CONTRACTOR SHALL NOTIFY THE WATER DIVISION OPERATIONS CENTER OPERATOR (815-987-5712) AS SOON AS POSSIBLE.

b) THE CONTRACTOR SHALL NOTIFY ALL WATER CUSTOMERS AFFECTED BY THE WATER MAIN VALVE SHUT OFF AND THE NEED TO BOIL WATER AS SOON AS POSSIBLE, USING FORMS SUPPLIED BY THE WATER DIVISION.

c) THE CONTRACTOR SHALL PROVIDE THE FOLLOWING INFORMATION (PURSUANT TO ILLINOIS MUNICIPAL CODE 65 ILCS 5/11-20-10.5):

- STREETS AND BOUNDARIES OF SHUT DOWN
- TIME OF SHUT DOWN
- APPROXIMATE DURATION OF SHUT DOWN
- NUMBER OF CUSTOMERS AFFECTED
- IF NON-RESIDENTIAL CUSTOMERS (HOSPITALS, NURSING HOMES, RESTAURANTS, ETC.) ARE AFFECTED, A COUNT OF HOW MANY INDIVIDUALS AFFECTED WILL BE PROVIDED.

d) IF THE CONTRACTOR IS INVOLVED IN REPAIRS, THE CONTRACTOR SHALL NOTIFY WATER DIVISION OPERATIONS CENTER OPERATOR UPON COMPLETION OF REPAIRS WHEN WATER SERVICE HAS BEEN RESTORED.

3. BACTERIOLOGICAL SAMPLING

BACTERIOLOGICAL SAMPLING TO BE DONE IN ACCORDANCE WITH AWWA C651-99 REGULATIONS AND EPA REGULATION SECTION 652.203. BACTERIOLOGICAL SAMPLING SHALL BE COLLECTED FROM THE PIPELINE FOLLOWING DISINFECTION AND FINAL FLUSHING. SAMPLES SHALL BE DELIVERED TO THE CITY OF ROCKFORD ENVIRONMENTAL LABORATORY (1111 CEDAR STREET) FOR ANALYSIS. SAMPLES MUST BE SUBMITTED IN LABORATORY APPROVED BOTTLES THAT MAY BE OBTAINED FROM THE LABORATORY. A COLIFORM ANALYSIS REPORT SHALL BE SUBMITTED WITH EACH SAMPLE (ALSO AVAILABLE AT THIS ADDRESS) AND SHALL INDICATE THE CHLORINE RESIDUAL (EITHER FREE OR TOTAL) AT THE TIME THE SAMPLE WAS COLLECTED. FAILURE TO RECORD THE RESIDUAL SHALL RESULT IN THE REJECTION OF THE SAMPLE. IF THE SAMPLE SHOWS THE PRESENCE OF COLIFORM ORGANISMS, THE CONTRACTOR SHALL BE NOTIFIED (CONTACT INFORMATION MUST APPEAR ON THE BACTERIOLOGICAL FORM) AND REPEAT THE DISINFECTION PROCEDURE. ON RESAMPLING, TWO (2) CONSECUTIVELY PASSING SAMPLES COLLECTED ON SUCCESSIVE DAYS (A MINIMUM OF 24 HOURS BETWEEN SAMPLING) SHALL BE REQUIRED.

IF VALVED SECTIONS OF THE PIPELINE ARE DISINFECTED SEPARATELY, EACH SECTION WILL BE CONSIDERED A SEPARATE PIPELINE FOR DISINFECTION, FLUSHING AND SAMPLING.

THE CITY OF ROCKFORD WILL RETAIN A COPY OF ALL BACTERIOLOGICAL LABORATORY REPORTS AND SUBMIT RESULTS TO THE ILLINOIS EPA AS REQUIRED. A COPY OF THE BACTERIOLOGICAL REPORT SHALL ALSO BE SENT TO THE CITY WATER ENGINEERING SUPERVISOR AND THE CONTRACTOR. THIS WORK WILL BE INCIDENTAL TO THE CONTRACT AND WILL NOT BE CONSIDERED FOR FURTHER PAYMENT.

4. COMPACTION OVER EXISTING WATER MAIN

UNDER NO CIRCUMSTANCES SHALL A CONTRACTOR BE ALLOWED TO USE VIBRATORY ROLLERS ON GROUND ABOVE EXISTING WATER MAIN LINES.

ROADWAY LIGHTING NOTES:

1. PRIOR TO THE INSTALLATION OF THE NEW CABLES, UNDERGROUND CONDUITS, CONCRETE ENCASED CONDUITS, UNIT DUCTS, HANDHOLES, JUNCTION BOXES, LIGHT POLE FOUNDATIONS, CONTROLLER FOUNDATIONS AND APPURTENANCES, THE CONTRACTOR SHALL DETERMINE THE EXACT LOCATION OF EXISTING CONDUITS, CABLES AND UNDERGROUND UTILITIES.
   THE CONTRACTOR SHALL CALL J.U.L.I.E. TO AID IN THIS TASK.

2. THE CONTRACTOR SHALL VERIFY ALL OF THE DATA SHOWN ON THE CONTRACT PLANS AND REFERENCE DRAWINGS, WHICH WOULD AFFECT HIS WORK UNDER THIS CONTRACT.

3. ALL NEW CABLES, CONDUITS, HANDHOLES, JUNCTION BOXES AND APPURTENANCES ARE ILLUSTRATED DIAGRAMMATICALLY. PROPOSED ROUTING OF THE UNDERGROUND CONDUITS, AS SHOWN IN THE PLANS, IS FOR INFORMATION ONLY. CONTRACTOR SHALL VERIFY THE ACTUAL ROUTING LOCATION IN THE FIELD WITH THE APPROVAL OF THE ENGINEER.

4. ALL SPLICES SHALL BE HEAT SHRINK AND WATERPROOF AND INSTALLED INSIDE LIGHT POLE BASES OR JUNCTION BOXES.
   NO DIRECT BURIED SPLICES SHALL BE ALLOWED.

5. LUMINAIRES MUST BE INSTALLED ON LIGHT STANDARDS WITHIN A MAXIMUM OF 48 HOURS AFTER LIGHT STANDARD IS ERECTED.

6. THE ELECTRICAL MATERIAL SHALL BE NEW AND OF THE TYPE AND KINDS APPROVED BY THE FOLLOWING ORGANIZATIONS:

   NATIONAL ELECTRICAL MANUFACTURES ASSOCIATION
   INSTITUTE OF ELECTRICAL AND ELECTRONIC ENGINEERS
   ILLUMINATION ENGINEERING SOCIETY OF NORTH AMERICA
   AMERICAN ASSOCIATION OF STATE HIGHWAY AND TRANSPORTATION OFFICIALS
   U.S. DEPARTMENT OF TRANSPORTATION
   UNDERWRITERS LABORATORIES
   AMERICAN STANDARD INSTITUTE
   INSULATED POWER CABLE ENGINEERS ASSOCIATION

7. UNDERGROUND CONDUITS AND CABLE DUCTS SHALL BE POSITIONED IN THE FIELD TO AVOID CONFLICTS WITH UNDERDRAINS AND OTHER UTILITES.

8. WHERE MULTIPLE CABLE DUCTS OR UNDERGROUND CONDUITS ADJACENT TO EACH OTHER ARE INSTALLED IN A COMMON TRENCH, TRENCH AND BACKFILL SHALL BE CONTINUOUS BETWEEN EACH CABLE DUCT OR UNDERGROUND CONDUIT FOR THE LENGTH OF THE COMMON TRENCH.

9. PROPOSED UTILITY POLES SHALL BE INSTALLED BY COMMONWEALTH EDISON CO. CONTRACTOR SHALL INSTALL UNDERGROUND CONDUITS, GROUNDING, DISCONNECT SWITCH, AND ANY SECONDARY CONDUCTORS TO THE UTILITY POLE. COORDINATE ALL WORK WITH COMMONWEALTH EDISON CO. REFER TO LIGHTING CONTROLLER DETAIL.

10. THE CONTRACTOR SHALL PREPARE A SCHEDULE WHEN THE PROJECT COMMENCES, WHICH ESTABLISHES THE DATE WHEN ELECTRICAL SERVICES ARE REQUIRED. THIS SCHEDULE SHALL BE FORWARDED IN WRITING TO COMMONWEALTH EDISON CO. SUBSEQUENT UPDATING TO THE SCHEDULE SHALL ALSO BE FORWARDED TO COMMONWEALTH EDISON CO. AS CHANGES OCCUR A MINIMUM OF FIVE (5) DAYS BEFORE ELECTRICAL SERVICES ARE REQUIRED. THE CONTRACTOR SHALL NOTIFY COMMONWEALTH EDISON BY PHONE AND IN WRITING TO CONFIRM THE REQUIREMENT.

11. FORTY-EIGHT (48) HOURS PRIOR TO THE REMOVAL OF ALL EXISTING LIGHTING POLES AND APPURTENANCES, (NOT SHOWN ON THE PLANS BUT THIS WORK SHALL BE PERFORMED) THE CONTRACTOR SHALL CONTACT THE CITY OF ROCKFORD AT (815) 987-5535.
    ALL EXISTING LIGHT POLES AND APPURTENANCES SHALL BE REMOVED AND RETURNED TO:

    THE CITY OF ROCKFORD
    500 SOUTH INDEPENDENCE AVENUE
    ROCKFORD, ILLINOIS 61102

12. FORTY-EIGHT (48) HOURS PRIOR TO EXCAVATION FOR PROPOSED ROADWAY LIGHTING FOUNDATIONS, THE CONTRACTOR SHALL NOTIFY THE ENGINEER AND THE CITY OF ROCKFORD AFTER FIELD STAKING HAS OCCURRED TO VERIFY AND APPROVE ALL FOUNDATION LOCATIONS.

13. DEPENDENT ON THE LIGHTING FOUNDATION LOCATIONS, MAST ARM LENGTHS (6', 8', 10' OR 12') WILL BE DETERMINED BY THE ENGINEER AND CITY OF ROCKFORD. ADDITIONAL LIGHT POLES WITH MAST ARMS OF VARYING LENGTH (8', 10' AND 12') MAY NEED TO BE FURNISHED AND INSTALLED DEPENDING ON THE FIELD FINDINGS. NO LIGHT POLES SHALL BE INSTALLED WITHOUT APPROVAL OF THE ENGINEER.

ROADWAY LIGHTING SUMMARY OF QUANTITIES

ITEM NUMBER	SP	PAY ITEM NUMBER	DESCRIPTION	UNIT	TOTAL QUANTITY
1		80400100	ELECTRIC SERVICE INSTALLATION	EACH	4
2		81028370	UNDERGROUND CONDUIT, PVC, 3" DIA.	FOOT	5,535
3		81028390	UNDERGROUND CONDUIT, PVC, 4" DIA.	FOOT	155
4	•	81028750	UNDERGROUND CONDUIT, COILABLE NONMETALLIC CONDUIT, 2" DIA.	FOOT	10,130
5	•	81400730	HANDHOLE, COMPOSITE CONCRETE	EACH	31••
6		81603037	UNIT DUCT, 600V, 2-1C NO.6, 1/C NO.6 GROUND, (XLP-TYPE USE), 1 1/4" DIA. POLYETHYLENE	FOOT	21,314
7		82500360	LIGHTING CONTROLLER, BASE MOUNTED, 480VOLT, 100AMP	EACH	4
8	•	83008200	LIGHT POLE, ALUMINUM, 40 FT. M.H., 6 FT. MAST ARM	EACH	115•••
9		83008300	LIGHT POLE, ALUMINUM, 40 FT. M.H., 8 FT. MAST ARM	EACH	4•••
10		83008400	LIGHT POLE, ALUMINUM, 40 FT. M.H., 10 FT. MAST ARM	EACH	4•••
11		83008500	LIGHT POLE, ALUMINUM, 40 FT. M.H., 12 FT. MAST ARM	EACH	4•••
12		83600300	LIGHT POLE FOUNDATION, 30" DIAMETER	FOOT	1,495
13		83800505	BREAKAWAY DEVICE, COUPLING WITH ALUMINUM SKIRT	EACH	460
14	•	87300901	ELECTRIC CABLE IN CONDUIT, TRACER, 1-1/C NO. 12	FOOT	10,169
15	•	X8210675	LUMINAIRE, METAL HALIDE, HORIZONTAL MOUNT, 400 WATT	EACH	115

• INDICATES SPECIAL PROVISION
•• INDICATES FOUR (4) EXTRA TYPE 1 HANDHOLES TO BE INSTALLED PER THE CITY OF ROCKFORD'S DIRECTION
••• SEE NOTE 13

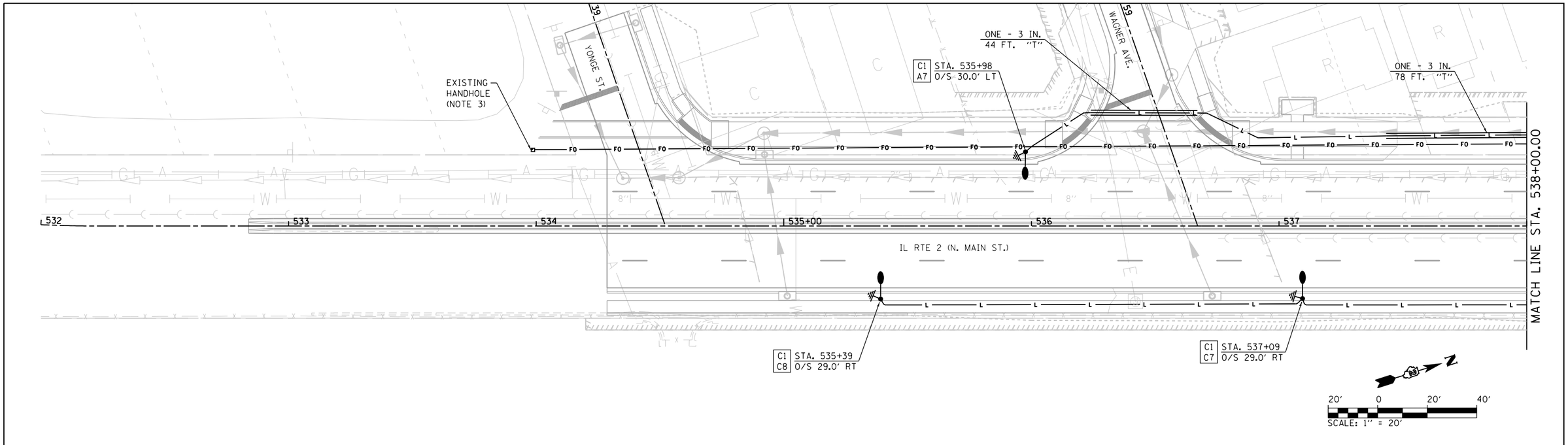

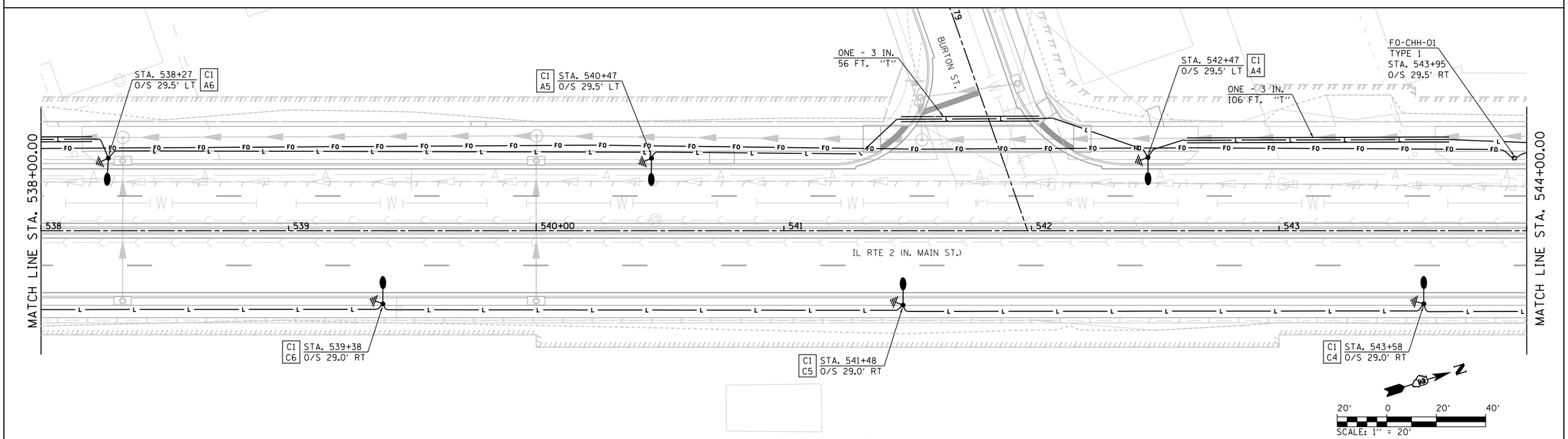

LEGEND

- PROPOSED DECORATIVE LIGHT POLE AND LUMINAIRE ALUMINUM, 40 FT. M.H., PULSE START METAL HALIDE, VERTICAL MOUNT 400 WATT (SEE NOTE 13 ON SHEET 1)
- PROPOSED COMBINATIONAL LIGHT POLE WITH 400W METAL HALIDE PULSE START LUMINAIRE
- PROPOSED UTILITY POLE (BY OTHERS)
- PROPOSED LIGHTING CONTROLLER, 100 AMP, 480V
- PROPOSED HANDHOLE, COMPOSITE CONCRETE
- GROUND ROD, 5/8" DIA. X 10' (SEE SHEET 19 FOR DETAILS)
- —FO— PROPOSED UNDERGROUND CONDUIT, COILABLE NONMETALLIC CONDUIT, 2" DIA. WITH PULL STRING AND 1-1/C NO. 12 TRACER CABLE
- PROPOSED UNDERGROUND CONDUIT, PVC SCHEDULE 80, SIZE AND CONDUCTORS AS INDICATED
- —L— PROPOSED UNIT DUCT, 600V, 2-1/C NO.6, 1/C NO.6 GROUND, (XLP-TYPE USE), 1¼" DIA. POLYETHYLENE
- —E— PROPOSED UNDERGROUND CONDUIT, GALVANIZED STEEL, 2" DIA. WITH 3-1/C NO. 2, 1-1/C NO. 6 GND (XLP-TYPE USE) COST INCIDENTAL TO PAY ITEM "80400100 - NEW ELECTRIC SERVICE INSTALLATION"

"P" PUSHED
"T" TRENCHED

LIGHT POLE IDENTIFICATION
C2 — CONTROLLER
A5 — POLE NUMBER
CIRCUIT

NOTES:

1. REFER TO ROADWAY LIGHTING NOTES ON SHEET 01.
2. LUMINAIRE MOUNTED ON COMBINATION POLE SHALL OPERATE ON 120V AC FROM TRAFFIC SIGNAL CONTROLLER. REFER TO TRAFFIC SIGNAL PLANS.
3. COORDINATE CONNECTION TO COMPOSITE HANDHOLE WITH ADJACENT CONTRACT.

CMT
License No. 184-000613
©Copyright CMT, Inc.

FILE NAME = D205006-LIGHT02.dgn	DESIGNED - CPT	REVISED -
MODEL NAME = Default	DRAWN - CPT	REVISED -
PLOT SCALE = 40.0018 ' / in.	CHECKED - AB	REVISED -
PLOT DATE = 3/10/2015 - 8:15:27 AM	DATE - 1/9/2015	REVISED -

STATE OF ILLINOIS
DEPARTMENT OF TRANSPORTATION

ROADWAY LIGHTING PLAN
IL ROUTE 2 (N. MAIN STREET)

SCALE: 1"=20' | SHEET 2 OF 24 SHEETS | STA. 532+00 TO STA. 544+00

F.A.P. RTE.	SECTION	COUNTY	TOTAL SHEETS	SHEET NO.
734	78R-2	WINNEBAGO	926	513

CONTRACT NO. 64C21

ILLINOIS FED. AID PROJECT

PEN TABLE = RockfordLightning.tbl
PLOT DRIVER = pdfNULAYERSbw.pltcfg

DIRECTORY = L:\ROCKFORD\13280-02_N.Main\Bridging\Drawr\CADD_Sheets\Electrical\
USER NAME = Casey Tobin

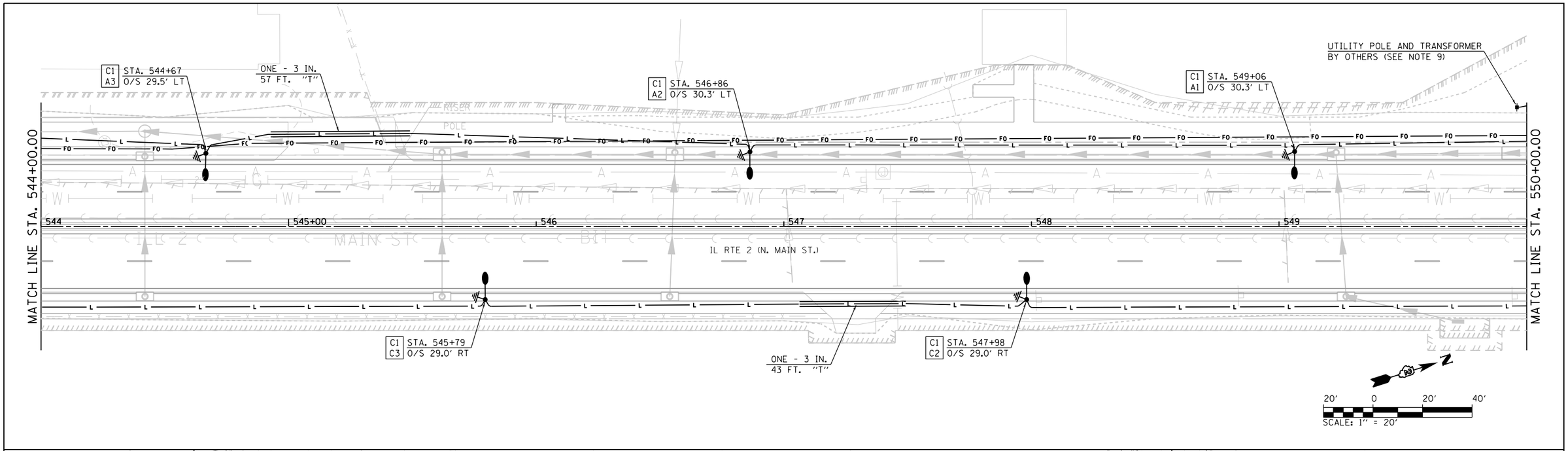

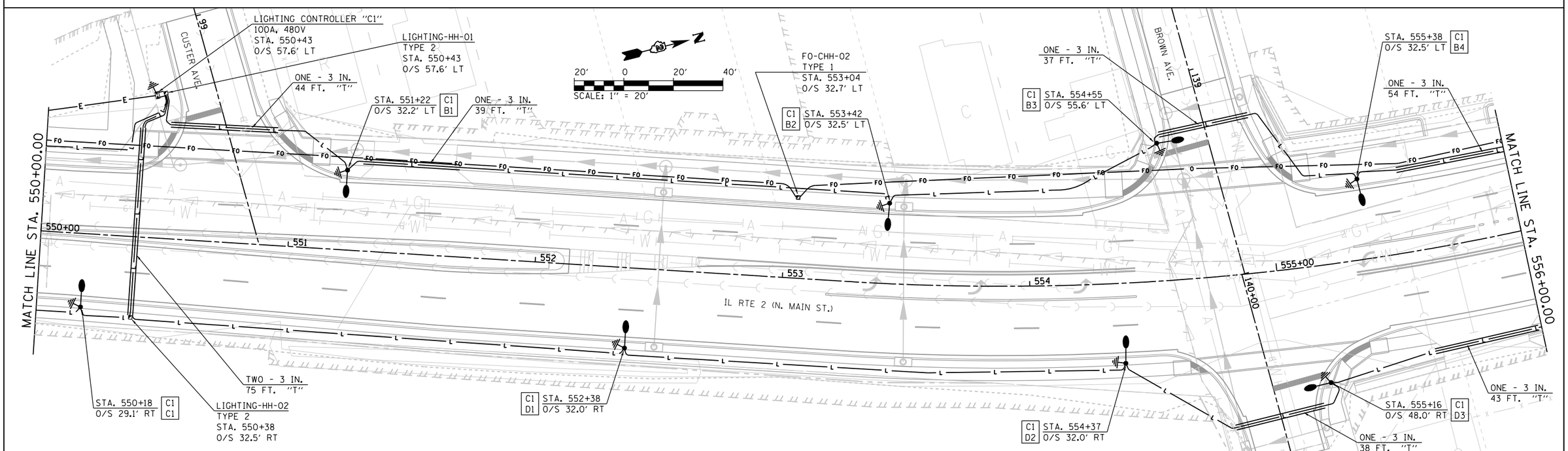

LEGEND

- PROPOSED DECORATIVE LIGHT POLE AND LUMINAIRE ALUMINUM, 40 FT. M.H., PULSE START METAL HALIDE, VERTICAL MOUNT 400 WATT (SEE NOTE 13 ON SHEET 1)
- PROPOSED COMBINATIONAL LIGHT POLE WITH 400W METAL HALIDE PULSE START LUMINAIRE
- PROPOSED UTILITY POLE (BY OTHERS)
- PROPOSED LIGHTING CONTROLLER, 100 AMP, 480V
- PROPOSED HANDHOLE, COMPOSITE CONCRETE
- GROUND ROD, 5/8" DIA. X 10' (SEE SHEET 19 FOR DETAILS)
- —FO— PROPOSED UNDERGROUND CONDUIT, COILABLE NONMETALLIC CONDUIT, 2" DIA. WITH PULL STRING AND 1-1/C NO. 12 TRACER CABLE
- PROPOSED UNDERGROUND CONDUIT, PVC SCHEDULE 80, SIZE AND CONDUCTORS AS INDICATED
- —L— PROPOSED UNIT DUCT, 600V, 2-1/C NO.6, 1/C NO.6 GROUND, (XLP-TYPE USE), 1¼" DIA. POLYETHYLENE
- —E— PROPOSED UNDERGROUND CONDUIT, GALVANIZED STEEL, 2" DIA. WITH 3-1/C NO. 2, 1-1/C NO. 6 GND (XLP-TYPE USE) COST INCIDENTAL TO PAY ITEM "80400100 - NEW ELECTRIC SERVICE INSTALLATION"

"P" PUSHED
"T" TRENCHED

LIGHT POLE IDENTIFICATION
C2 — CONTROLLER
A5 — POLE NUMBER
CIRCUIT

NOTES:

1. REFER TO ROADWAY LIGHTING NOTES ON SHEET 01.
2. LUMINAIRE MOUNTED ON COMBINATION POLE SHALL OPERATE ON 120V AC FROM TRAFFIC SIGNAL CONTROLLER. REFER TO TRAFFIC SIGNAL PLANS.

CMT
License No. 184-000613
©Copyright CMT, Inc.

FILE NAME = D206006-LIGHT03.dgn	DESIGNED - CPT	REVISED -	
MODEL NAME = Default	DRAWN - CPT	REVISED -	
PLOT SCALE = 40.0018 ' / in.	CHECKED - AB	REVISED -	
PLOT DATE = 3/10/2015 - 8:15:30 AM	DATE - 1/9/2015	REVISED -	

STATE OF ILLINOIS
DEPARTMENT OF TRANSPORTATION

ROADWAY LIGHTING PLAN
IL ROUTE 2 (N. MAIN STREET)

SCALE: 1"=20' | SHEET 3 OF 24 SHEETS | STA. 544+00 TO STA. 556+00

F.A.P. RTE.	SECTION	COUNTY	TOTAL SHEETS	SHEET NO.
734	78R-2	WINNEBAGO	926	514

CONTRACT NO. 64C21
ILLINOIS FED. AID PROJECT

PEN TABLE = RockfordLightung.tbl
PLOT DRIVER = pdfNULAYERSbw.pltcfg
DIRECTORY = L:\ROCKFORD\1326\02_N.MainSt\Lighting\Dwn\C400_Sheets\Electrical\
USER NAME = Casey Toth

PEN TABLE = RockfordLighting.tbl
PLOT DRIVER = pdfNBLAYERSbw.pltcfg

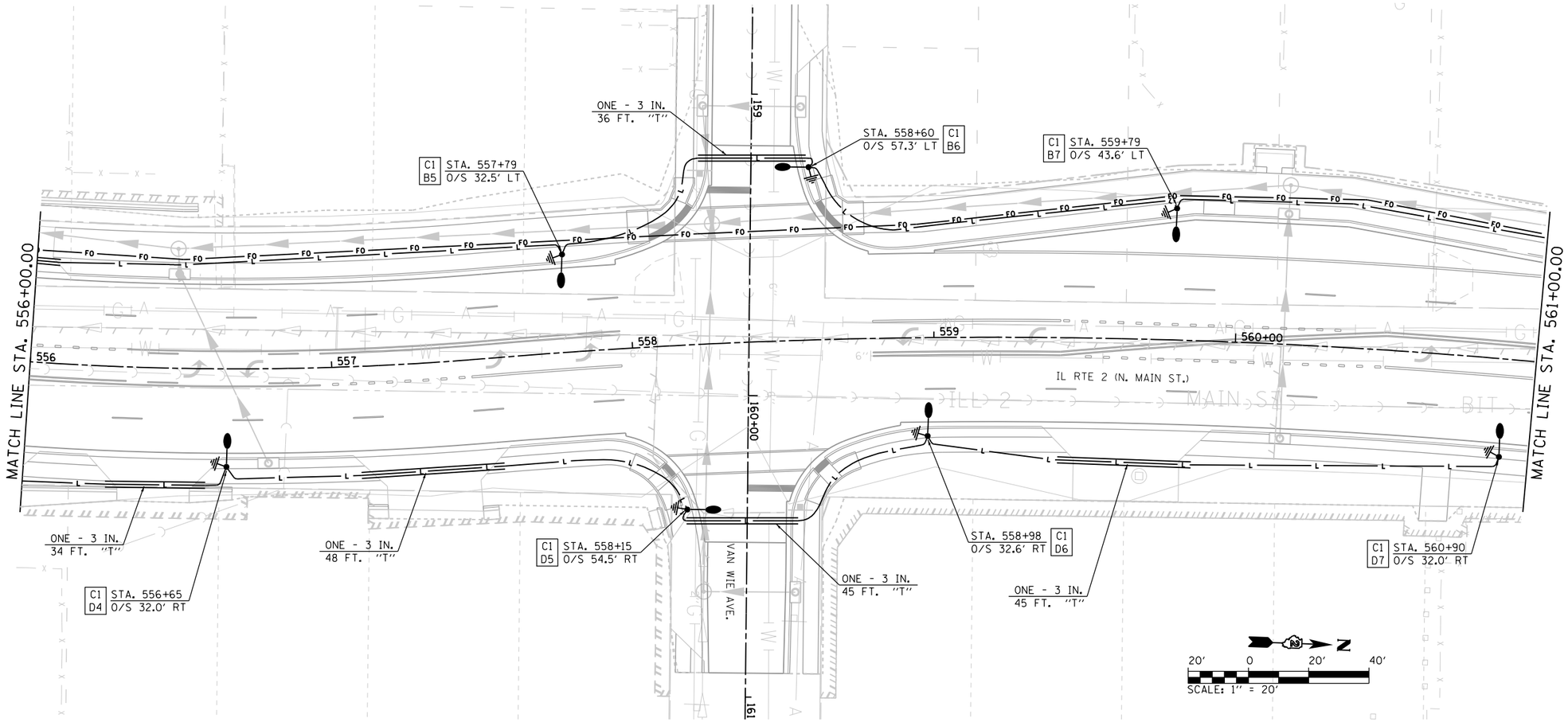

LEGEND

- PROPOSED DECORATIVE LIGHT POLE AND LUMINAIRE ALUMINUM, 40 FT. M.H., PULSE START METAL HALIDE, VERTICAL MOUNT 400 WATT (SEE NOTE 13 ON SHEET 1)
- PROPOSED COMBINATIONAL LIGHT POLE WITH 400W METAL HALIDE PULSE START LUMINAIRE
- PROPOSED UTILITY POLE (BY OTHERS)
- PROPOSED LIGHTING CONTROLLER, 100 AMP, 480V
- PROPOSED HANDHOLE, COMPOSITE CONCRETE
- GROUND ROD, 5/8" DIA. X 10' (SEE SHEET 19 FOR DETAILS)
- —FO— PROPOSED UNDERGROUND CONDUIT, COILABLE NONMETALLIC CONDUIT, 2" DIA. WITH PULL STRING AND 1-1/C NO. 12 TRACER CABLE
- PROPOSED UNDERGROUND CONDUIT, PVC SCHEDULE 80, SIZE AND CONDUCTORS AS INDICATED
- —L— PROPOSED UNIT DUCT, 600V, 2-1/C NO.6, 1/C NO.6 GROUND, (XLP-TYPE USE), 1¼" DIA. POLYETHYLENE
- —E— PROPOSED UNDERGROUND CONDUIT, GALVANIZED STEEL, 2" DIA. WITH 3-1/C NO. 2, 1-1/C NO. 6 GND (XLP-TYPE USE) COST INCIDENTAL TO PAY ITEM "80400100 - NEW ELECTRIC SERVICE INSTALLATION"

"P" PUSHED
"T" TRENCHED

LIGHT POLE IDENTIFICATION
C2 — CONTROLLER
A5 — POLE NUMBER
CIRCUIT

NOTES:

1. REFER TO ROADWAY LIGHTING NOTES ON SHEET 01.
2. LUMINAIRE MOUNTED ON COMBINATION POLE SHALL OPERATE ON 120V AC FROM TRAFFIC SIGNAL CONTROLLER. REFER TO TRAFFIC SIGNAL PLANS.

CMT
License No. 184-000613
©Copyright CMT, Inc.

FILE NAME = D205006-LIGHT04.dgn	DESIGNED - CPT	REVISED -	
MODEL NAME = Default	DRAWN - CPT	REVISED -	
PLOT SCALE = 40.0018 ' / in.	CHECKED - AB	REVISED -	
PLOT DATE = 3/10/2015 - 8:15:31 AM	DATE - 1/9/2015	REVISED -	

STATE OF ILLINOIS
DEPARTMENT OF TRANSPORTATION

ROADWAY LIGHTING PLAN
IL ROUTE 2 (N. MAIN STREET)

SCALE: 1"=20' | SHEET 4 OF 24 SHEETS | STA. 556+00 TO STA. 561+00

F.A.P. RTE.	SECTION	COUNTY	TOTAL SHEETS	SHEET NO.
734	78R-2	WINNEBAGO	926	515

CONTRACT NO. 64C21
ILLINOIS FED. AID PROJECT

DIRECTORY = L:\ROCKFORD\13280-02_N.Main&SLighting\Dwg\CADD_Sheets\Electrical\
USER NAME = Casey Tolin

PEN TABLE = RockfordLightingtbl
PLOT DRIVER = pdfNDLAYERSbw.pltcfg

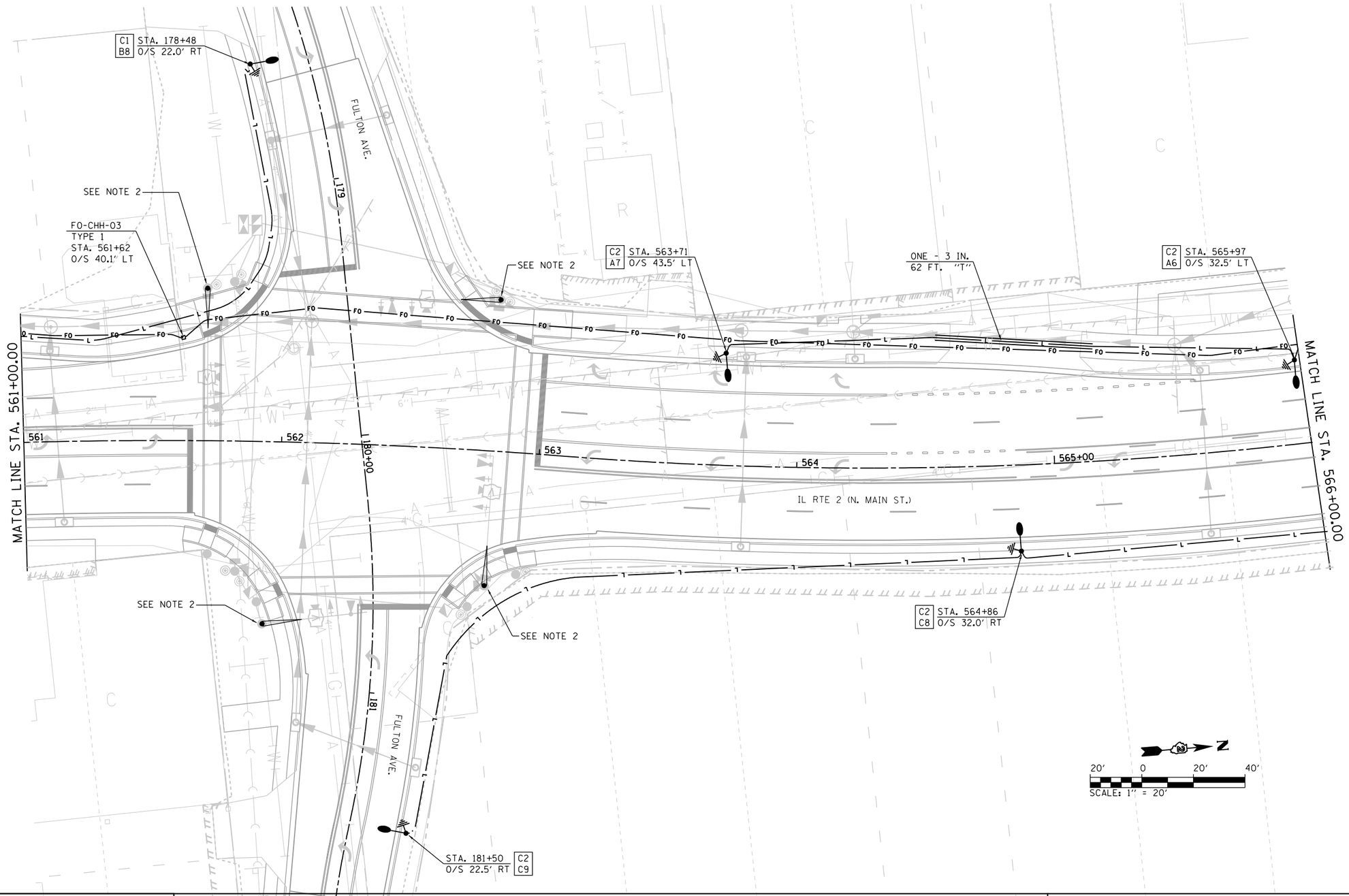

LEGEND

- PROPOSED DECORATIVE LIGHT POLE AND LUMINAIRE ALUMINUM, 40 FT. M.H., PULSE START METAL HALIDE, VERTICAL MOUNT 400 WATT (SEE NOTE 13 ON SHEET 1)
- PROPOSED COMBINATIONAL LIGHT POLE WITH 400W METAL HALIDE PULSE START LUMINAIRE
- PROPOSED UTILITY POLE (BY OTHERS)
- PROPOSED LIGHTING CONTROLLER, 100 AMP, 480V
- PROPOSED HANDHOLE, COMPOSITE CONCRETE
- GROUND ROD, 5/8" DIA. X 10' (SEE SHEET 19 FOR DETAILS)
- —FO— PROPOSED UNDERGROUND CONDUIT, COILABLE NONMETALLIC CONDUIT, 2" DIA. WITH PULL STRING AND 1-1/C NO. 12 TRACER CABLE
- PROPOSED UNDERGROUND CONDUIT, PVC SCHEDULE 80, SIZE AND CONDUCTORS AS INDICATED
- —L— PROPOSED UNIT DUCT, 600V, 2-1/C NO.6, 1/C NO.6 GROUND, (XLP-TYPE USE), 1¼" DIA. POLYETHYLENE
- —E— PROPOSED UNDERGROUND CONDUIT, GALVANIZED STEEL, 2" DIA. WITH 3-1/C NO. 2, 1-1/C NO. 6 GND (XLP-TYPE USE) COST INCIDENTAL TO PAY ITEM "80400100 - NEW ELECTRIC SERVICE INSTALLATION"

"P" PUSHED
"T" TRENCHED

LIGHT POLE IDENTIFICATION
C2 — CONTROLLER
A5 — POLE NUMBER
CIRCUIT

NOTES:

1. REFER TO ROADWAY LIGHTING NOTES ON SHEET 01.
2. LUMINAIRE MOUNTED ON COMBINATION POLE SHALL OPERATE ON 120V AC FROM TRAFFIC SIGNAL CONTROLLER. REFER TO TRAFFIC SIGNAL PLANS.

DIRECTORY = L:\ROCKFORD\13260\02_N.Main\SE.Lighting\Dwg\CADD_Sheets\Electrical\
USER NAME = Casey Tobin

CMT
License No. 184-000613
© Copyright CMT, Inc.

FILE NAME = D205006-LIGHT05.dgn	DESIGNED - CPT	REVISED -	
MODEL NAME = Default	DRAWN - CPT	REVISED -	
PLOT SCALE = 40.0018 ' / in.	CHECKED - AB	REVISED -	
PLOT DATE = 3/10/2015 - 8:15:33 AM	DATE - 1/9/2015	REVISED -	

STATE OF ILLINOIS
DEPARTMENT OF TRANSPORTATION

ROADWAY LIGHTING PLAN
IL ROUTE 2 (N. MAIN STREET)

SCALE: 1"=20' | SHEET 5 OF 24 SHEETS | STA. 561+00 TO STA. 566+00

F.A.P. RTE.	SECTION	COUNTY	TOTAL SHEETS	SHEET NO.
734	78R-2	WINNEBAGO	926	516

CONTRACT NO. 64C21

ILLINOIS FED. AID PROJECT

PEN TABLE = RockfordLightingtbl
PLOT DRIVER = pdfNDLAYERSbw.pltcfg

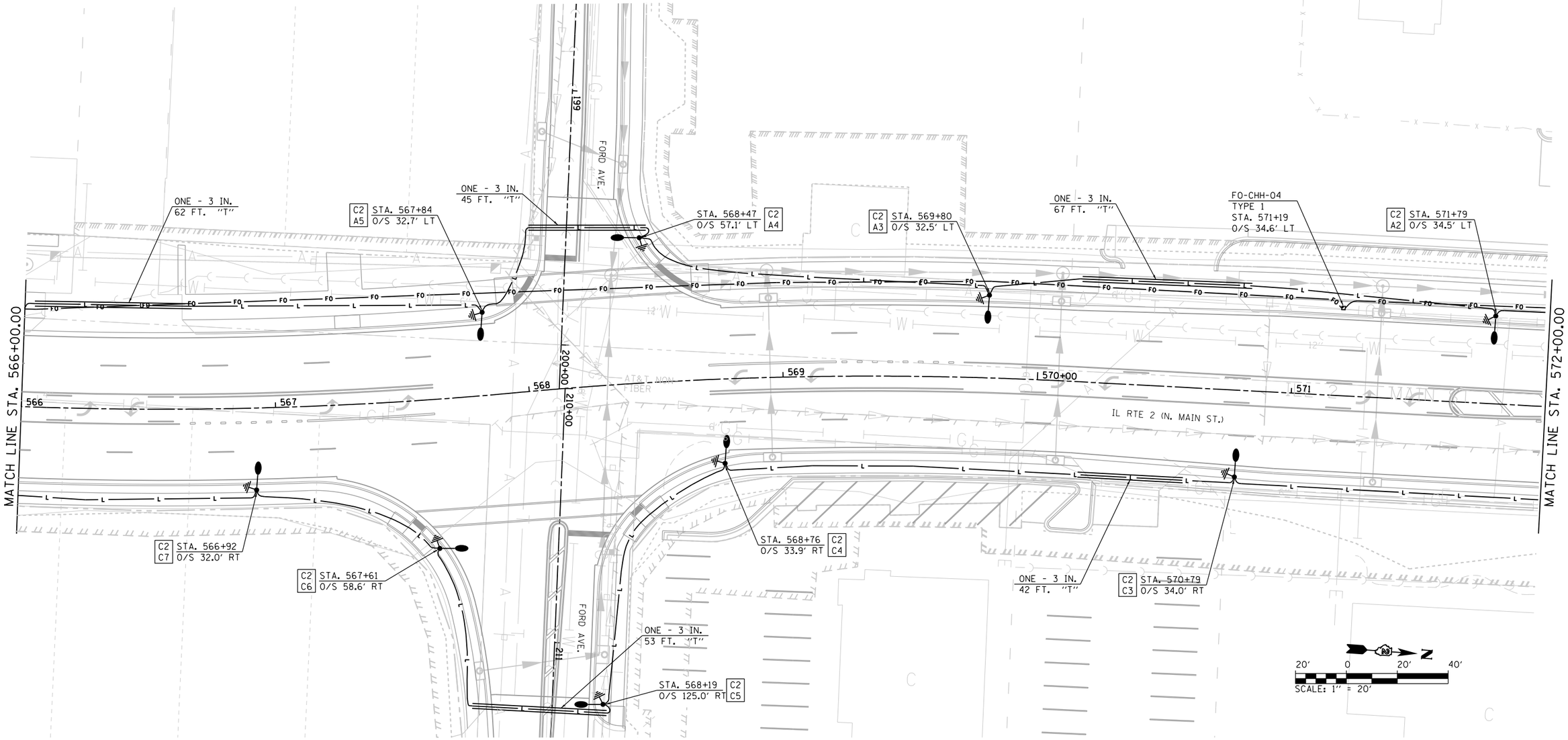

LEGEND

- PROPOSED DECORATIVE LIGHT POLE AND LUMINAIRE ALUMINUM, 40 FT. M.H., PULSE START METAL HALIDE, VERTICAL MOUNT 400 WATT (SEE NOTE 13 ON SHEET 1)
- PROPOSED COMBINATIONAL LIGHT POLE WITH 400W METAL HALIDE PULSE START LUMINAIRE
- PROPOSED UTILITY POLE (BY OTHERS)
- PROPOSED LIGHTING CONTROLLER, 100 AMP, 480V
- PROPOSED HANDHOLE, COMPOSITE CONCRETE
- GROUND ROD, 5/8" DIA. X 10' (SEE SHEET 19 FOR DETAILS)
- —FO— PROPOSED UNDERGROUND CONDUIT, COILABLE NONMETALLIC CONDUIT, 2" DIA. WITH PULL STRING AND 1-1/C NO. 12 TRACER CABLE
- PROPOSED UNDERGROUND CONDUIT, PVC SCHEDULE 80, SIZE AND CONDUCTORS AS INDICATED
- —L— PROPOSED UNIT DUCT, 600V, 2-1/C NO.6, 1/C NO.6 GROUND, (XLP-TYPE USE), 1¼" DIA. POLYETHYLENE
- —E— PROPOSED UNDERGROUND CONDUIT, GALVANIZED STEEL, 2" DIA. WITH 3-1/C NO. 2, 1-1/C NO. 6 GND (XLP-TYPE USE) COST INCIDENTAL TO PAY ITEM "80400100 - NEW ELECTRIC SERVICE INSTALLATION"

"P" PUSHED
"T" TRENCHED

LIGHT POLE IDENTIFICATION
C2 — CONTROLLER
A5 — POLE NUMBER
CIRCUIT

NOTES:

1. REFER TO ROADWAY LIGHTING NOTES ON SHEET 01.
2. LUMINAIRE MOUNTED ON COMBINATION POLE SHALL OPERATE ON 120V AC FROM TRAFFIC SIGNAL CONTROLLER. REFER TO TRAFFIC SIGNAL PLANS.

CMT
License No. 184-000613
© Copyright CMT, Inc.

FILE NAME = D205006-LIGHT06.dgn	DESIGNED - CPT	REVISED -	
MODEL NAME = Default	DRAWN - CPT	REVISED -	
PLOT SCALE = 40.0018 ' / in.	CHECKED - AB	REVISED -	
PLOT DATE = 3/10/2015 - 8:15:35 AM	DATE - 1/9/2015	REVISED -	

STATE OF ILLINOIS
DEPARTMENT OF TRANSPORTATION

ROADWAY LIGHTING PLAN
IL ROUTE 2 (N. MAIN STREET)

SCALE: 1"=20' | SHEET 6 OF 24 SHEETS | STA. 566+00 TO STA. 572+00

F.A.P. RTE.	SECTION	COUNTY	TOTAL SHEETS	SHEET NO.
734	78R-2	WINNEBAGO	926	517

CONTRACT NO. 64C21
ILLINOIS FED. AID PROJECT

DIRECTORY = L:\ROCKFORD\13280-02_N.Main\Lighting\Dmw\CADD_Sheets\Electrical\
USER NAME = Casey Tobin

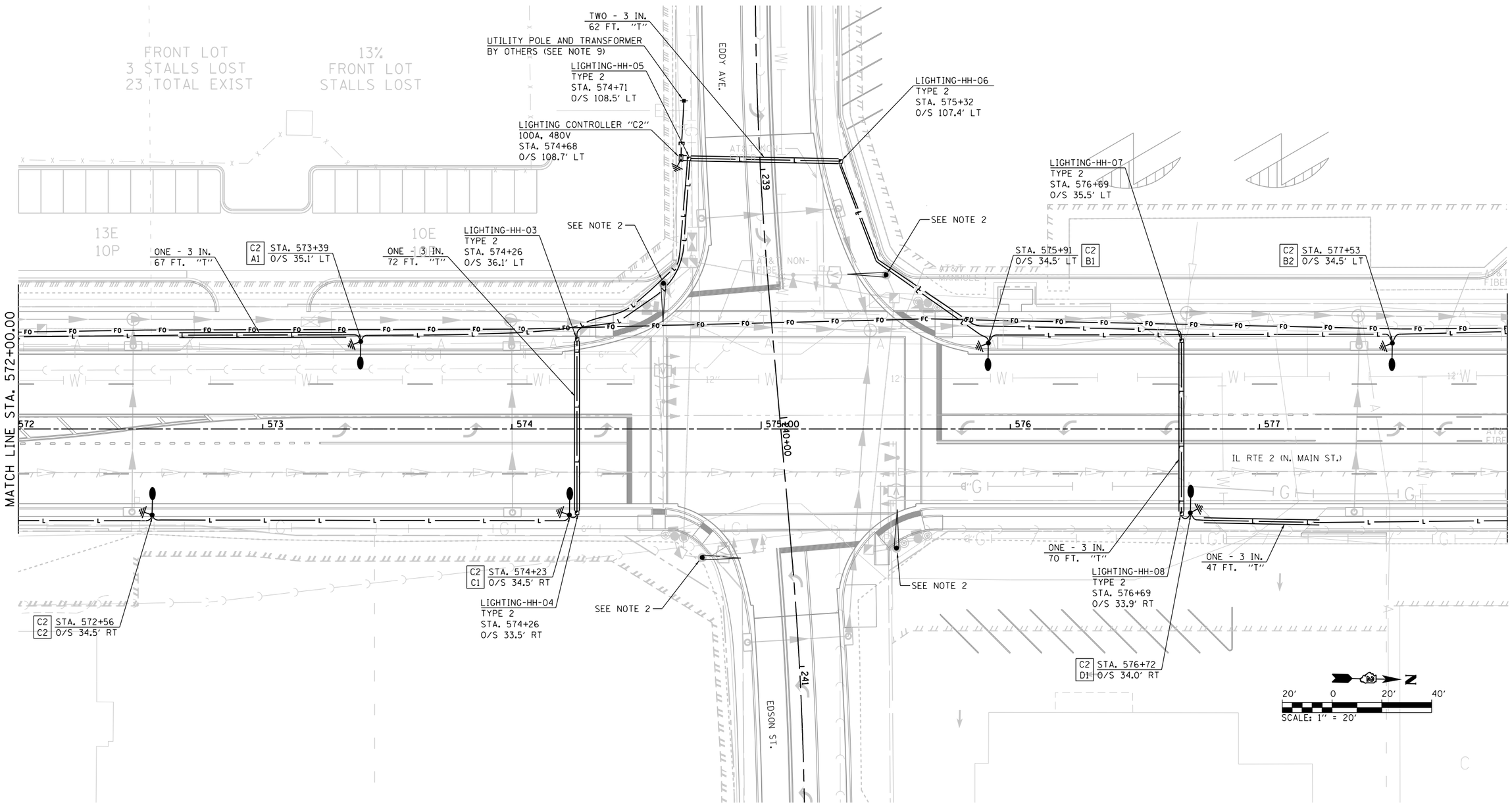

LEGEND

- PROPOSED DECORATIVE LIGHT POLE AND LUMINAIRE ALUMINUM, 40 FT. M.H., PULSE START METAL HALIDE, VERTICAL MOUNT 400 WATT (SEE NOTE 13 ON SHEET 1)
- PROPOSED COMBINATIONAL LIGHT POLE WITH 400W METAL HALIDE PULSE START LUMINAIRE
- PROPOSED UTILITY POLE (BY OTHERS)
- PROPOSED LIGHTING CONTROLLER, 100 AMP, 480V
- PROPOSED HANDHOLE, COMPOSITE CONCRETE
- GROUND ROD, 5/8" DIA. X 10' (SEE SHEET 19 FOR DETAILS)
- —FO— PROPOSED UNDERGROUND CONDUIT, COILABLE NONMETALLIC CONDUIT, 2" DIA. WITH PULL STRING AND 1-1/C NO. 12 TRACER CABLE
- PROPOSED UNDERGROUND CONDUIT, PVC SCHEDULE 80, SIZE AND CONDUCTORS AS INDICATED
- —L— PROPOSED UNIT DUCT, 600V, 2-1/C NO.6, 1/C NO.6 GROUND, (XLP-TYPE USE), 1¼" DIA. POLYETHYLENE
- —E— PROPOSED UNDERGROUND CONDUIT, GALVANIZED STEEL, 2" DIA. WITH 3-1/C NO. 2, 1-1/C NO. 6 GND (XLP-TYPE USE) COST INCIDENTAL TO PAY ITEM "80400100 - NEW ELECTRIC SERVICE INSTALLATION"

"P" PUSHED
"T" TRENCHED

LIGHT POLE IDENTIFICATION
C2 — CONTROLLER
A5 — POLE NUMBER
CIRCUIT

NOTES:

1. REFER TO ROADWAY LIGHTING NOTES ON SHEET 01.
2. LUMINAIRE MOUNTED ON COMBINATION POLE SHALL OPERATE ON 120V AC FROM TRAFFIC SIGNAL CONTROLLER. REFER TO TRAFFIC SIGNAL PLANS.

CMT
License No. 184-000613
© Copyright CMT, Inc.

FILE NAME = D205006-LIGHT07.dgn	DESIGNED - CPT	REVISED -	
MODEL NAME = Default	DRAWN - CPT	REVISED -	
PLOT SCALE = 40.0018 ' / in.	CHECKED - AB	REVISED -	
PLOT DATE = 3/10/2015 - 8:15:37 AM	DATE - 1/9/2015	REVISED -	

STATE OF ILLINOIS
DEPARTMENT OF TRANSPORTATION

ROADWAY LIGHTING PLAN
IL ROUTE 2 (N. MAIN STREET)

SCALE: 1"=20' | SHEET 7 OF 24 SHEETS | STA. 572+00 TO STA. 578+00

F.A.P. RTE.	SECTION	COUNTY	TOTAL SHEETS	SHEET NO.
734	78R-2	WINNEBAGO	926	518
		CONTRACT NO. 64C21		
		ILLINOIS FED. AID PROJECT		

PEN TABLE = RockfordLightingtbl
PLOT DRIVER = pdfNULAYERSbw.pltcfg

DIRECTORY = L:\ROCKFORD\13205-02_N.Main\SE_Lighting\Dwg\CADD_Sheets\Electrical\
USER NAME = Casey Tobin

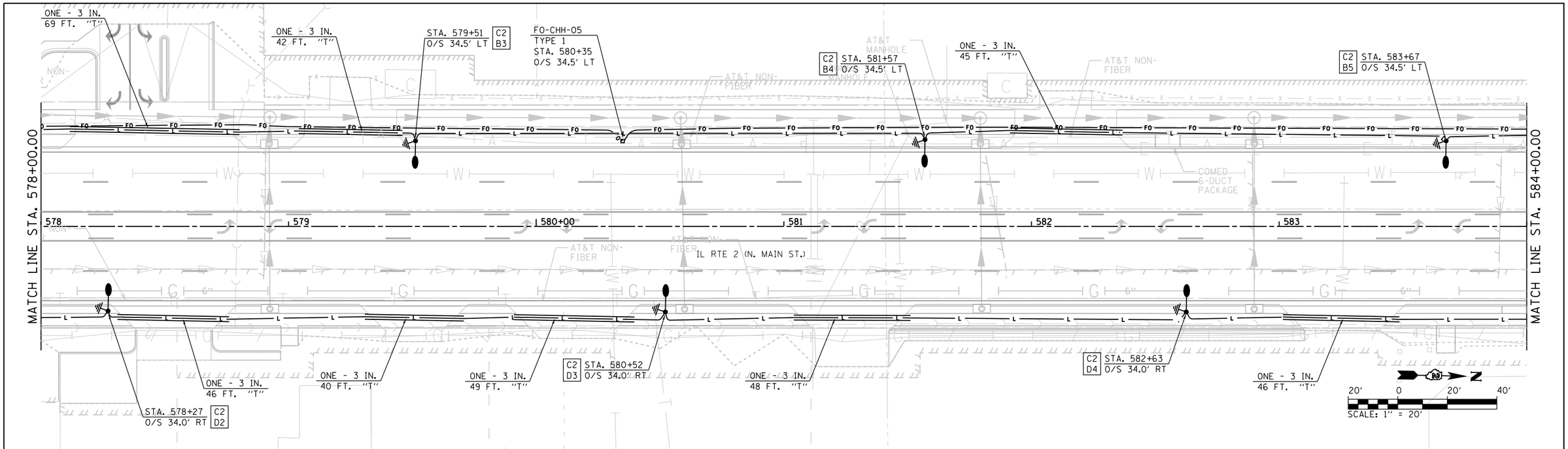

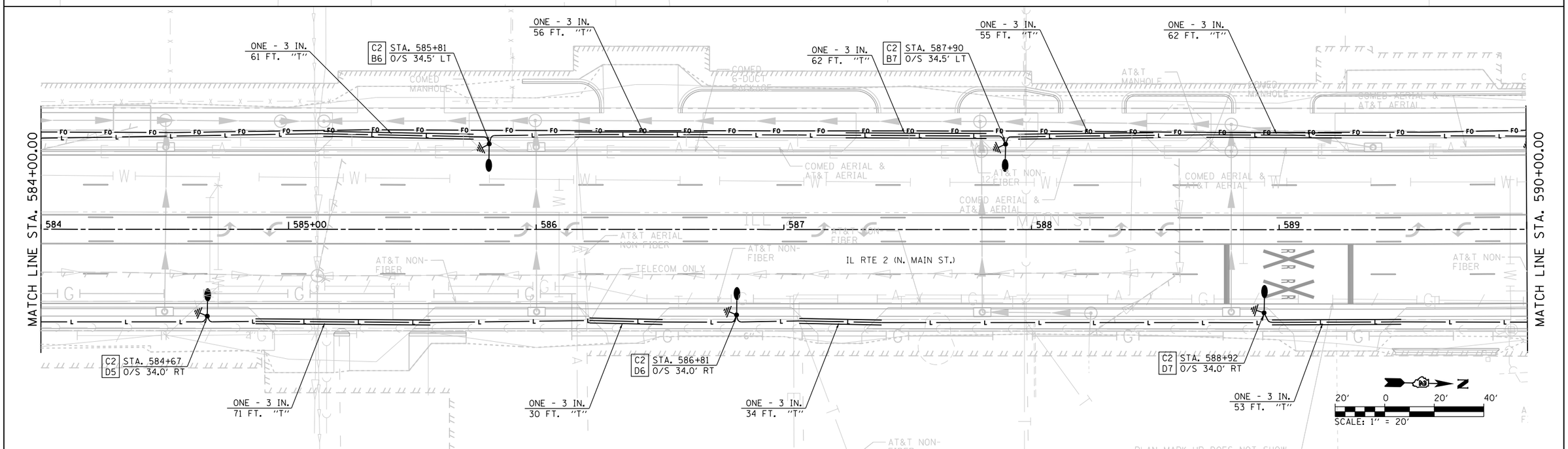

LEGEND

- PROPOSED DECORATIVE LIGHT POLE AND LUMINAIRE ALUMINUM, 40 FT. M.H., PULSE START METAL HALIDE, VERTICAL MOUNT 400 WATT (SEE NOTE 13 ON SHEET 1)
- PROPOSED COMBINATIONAL LIGHT POLE WITH 400W METAL HALIDE PULSE START LUMINAIRE
- PROPOSED UTILITY POLE (BY OTHERS)
- PROPOSED LIGHTING CONTROLLER, 100 AMP, 480V
- PROPOSED HANDHOLE, COMPOSITE CONCRETE
- GROUND ROD, 5/8" DIA. X 10' (SEE SHEET 19 FOR DETAILS)
- —FO— PROPOSED UNDERGROUND CONDUIT, COILABLE NONMETALLIC CONDUIT, 2" DIA. WITH PULL STRING AND 1-1/C NO. 12 TRACER CABLE
- PROPOSED UNDERGROUND CONDUIT, PVC SCHEDULE 80, SIZE AND CONDUCTORS AS INDICATED
- —L— PROPOSED UNIT DUCT, 600V, 2-1/C NO.6, 1/C NO.6 GROUND, (XLP-TYPE USE), 1¼" DIA. POLYETHYLENE
- —E— PROPOSED UNDERGROUND CONDUIT, GALVANIZED STEEL, 2" DIA. WITH 3-1/C NO. 2, 1-1/C NO. 6 GND (XLP-TYPE USE) COST INCIDENTAL TO PAY ITEM "80400100 - NEW ELECTRIC SERVICE INSTALLATION"

"P" PUSHED
"T" TRENCHED

LIGHT POLE IDENTIFICATION
C2 — CONTROLLER
A5 — POLE NUMBER
CIRCUIT

NOTES:

1. REFER TO ROADWAY LIGHTING NOTES ON SHEET 01.
2. LUMINAIRE MOUNTED ON COMBINATION POLE SHALL OPERATE ON 120V AC FROM TRAFFIC SIGNAL CONTROLLER. REFER TO TRAFFIC SIGNAL PLANS.

CMT
License No. 184-000613
©Copyright CMT, Inc.

FILE NAME = D206006-LIGHT08.dgn	DESIGNED - CPT	REVISED -	
MODEL NAME = Default	DRAWN - CPT	REVISED -	
PLOT SCALE = 40.0018 ' / in.	CHECKED - AB	REVISED -	
PLOT DATE = 3/10/2015 - 8:15:39 AM	DATE - 1/9/2015	REVISED -	

STATE OF ILLINOIS
DEPARTMENT OF TRANSPORTATION

ROADWAY LIGHTING PLAN
IL ROUTE 2 (N. MAIN STREET)

SCALE: 1"=20' | SHEET 8 OF 24 SHEETS | STA. 578+00 TO STA. 590+00

F.A.P. RTE.	SECTION	COUNTY	TOTAL SHEETS	SHEET NO.
734	78R-2	WINNEBAGO	926	519

CONTRACT NO. 64C21
ILLINOIS FED. AID PROJECT

PEN TABLE = RockfordLightung.tbl
PLOT DRIVER = pdfNULAYERSbw.pltcfg

DIRECTORY = L:\ROCKFORD\13280-92_N.Main\SL\plans\Draw\CADD_Sheets\Electrical\
USER NAME = Casey Tobin

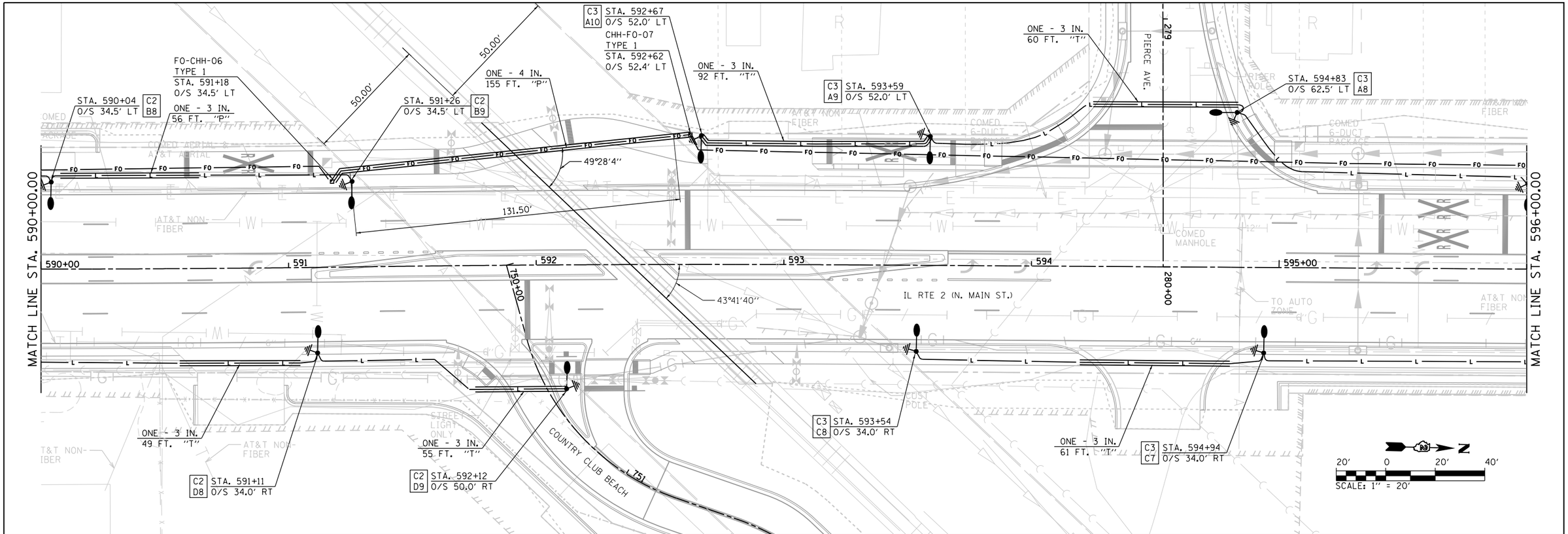

LEGEND

- PROPOSED DECORATIVE LIGHT POLE AND LUMINAIRE ALUMINUM, 40 FT. M.H., PULSE START METAL HALIDE, VERTICAL MOUNT 400 WATT (SEE NOTE 13 ON SHEET 1)
- PROPOSED COMBINATIONAL LIGHT POLE WITH 400W METAL HALIDE PULSE START LUMINAIRE
- PROPOSED UTILITY POLE (BY OTHERS)
- PROPOSED LIGHTING CONTROLLER, 100 AMP, 480V
- PROPOSED HANDHOLE, COMPOSITE CONCRETE
- GROUND ROD, 5/8" DIA. X 10' (SEE SHEET 19 FOR DETAILS)
- —FO— PROPOSED UNDERGROUND CONDUIT, COILABLE NONMETALLIC CONDUIT, 2" DIA. WITH PULL STRING AND 1-1/C NO. 12 TRACER CABLE
- PROPOSED UNDERGROUND CONDUIT, PVC SCHEDULE 80, SIZE AND CONDUCTORS AS INDICATED
- —L— PROPOSED UNIT DUCT, 600V, 2-1/C NO.6, 1/C NO.6 GROUND, (XLP-TYPE USE), 1¼" DIA. POLYETHYLENE
- —E— PROPOSED UNDERGROUND CONDUIT, GALVANIZED STEEL, 2" DIA. WITH 3-1/C NO. 2, 1-1/C NO. 6 GND (XLP-TYPE USE) COST INCIDENTAL TO PAY ITEM "80400100 - NEW ELECTRIC SERVICE INSTALLATION"

"P" PUSHED
"T" TRENCHED

LIGHT POLE IDENTIFICATION
C2 — CONTROLLER
A5 — POLE NUMBER
CIRCUIT

NOTES:

1. REFER TO ROADWAY LIGHTING NOTES ON SHEET 01.
2. LUMINAIRE MOUNTED ON COMBINATION POLE SHALL OPERATE ON 120V AC FROM TRAFFIC SIGNAL CONTROLLER. REFER TO TRAFFIC SIGNAL PLANS.

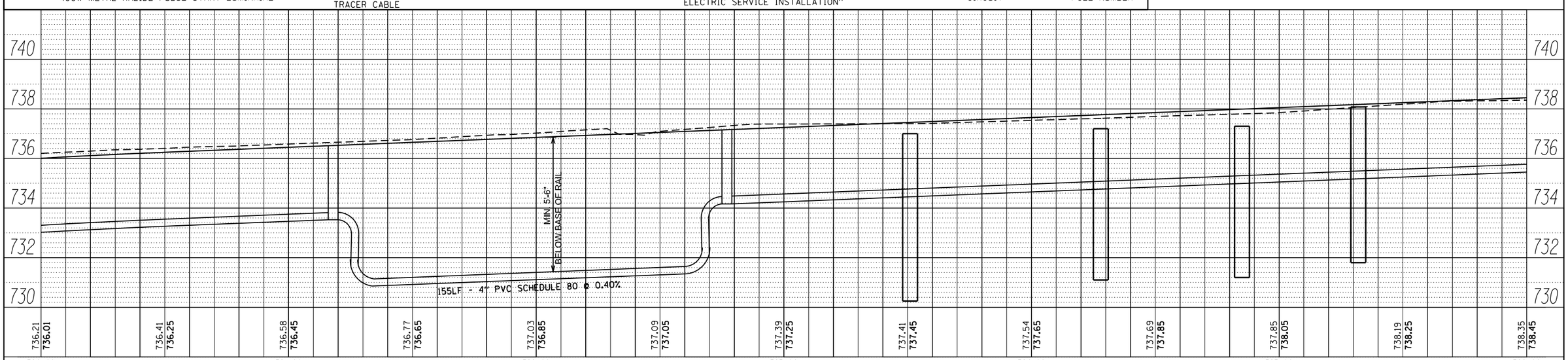

CMT
License No. 184-000613
©Copyright CMT, Inc.

FILE NAME = D205006-LIGHT09.dgn	DESIGNED - CPT	REVISED -	
MODEL NAME = Default	DRAWN - CPT	REVISED -	
PLOT SCALE = 40.0018 ' / in.	CHECKED - AB	REVISED -	
PLOT DATE = 3/10/2015 - 8:15:42 AM	DATE - 1/9/2015	REVISED -	

STATE OF ILLINOIS
DEPARTMENT OF TRANSPORTATION

ROADWAY LIGHTING PLAN
IL ROUTE 2 (N. MAIN STREET)

SCALE: 1"=20' | SHEET 9 OF 24 SHEETS | STA. 590+00 TO STA. 596+00

F.A.P. RTE.	SECTION	COUNTY	TOTAL SHEETS	SHEET NO.
734	78R-2	WINNEBAGO	926	520

CONTRACT NO. 64C21
ILLINOIS FED. AID PROJECT

PEN TABLE = Rockford_Lightning.tbl
PLOT DRIVER = pdfNULAYER50w.pltcfg

DIRECTORY = L:\ROCKFORD\13260-02_N.Main St.grding\Dwg\CADD_Sheets\Electrical\
USER NAME = Casey Tobin

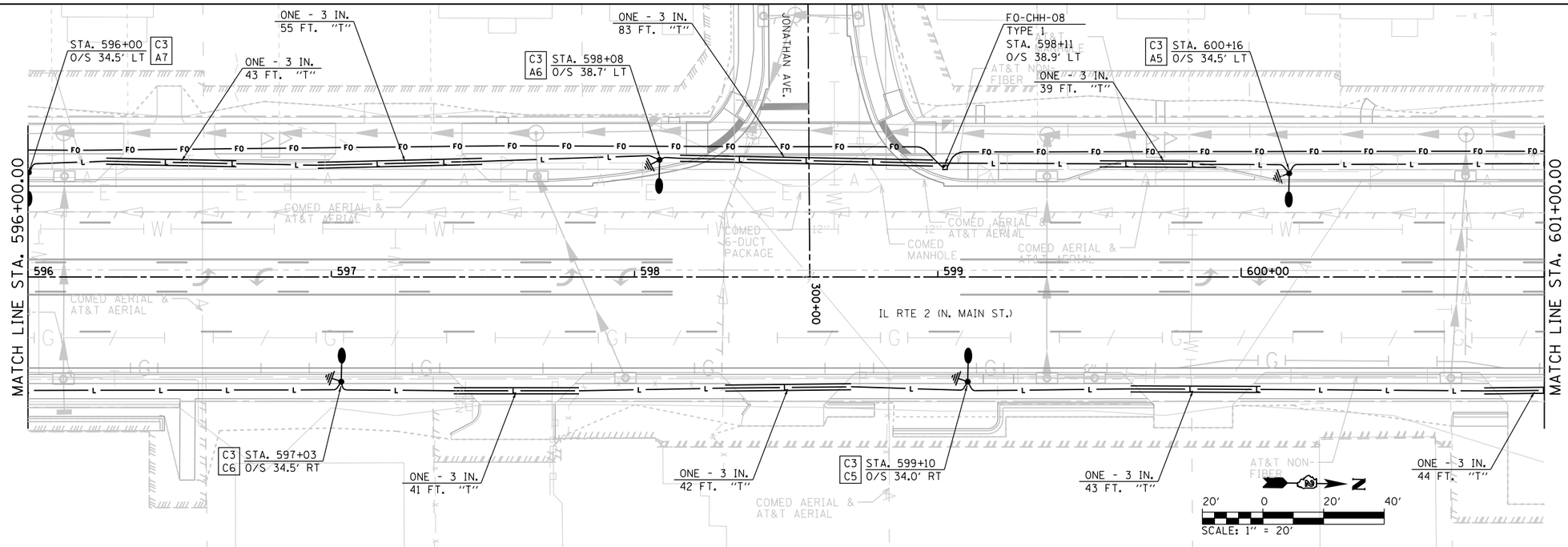

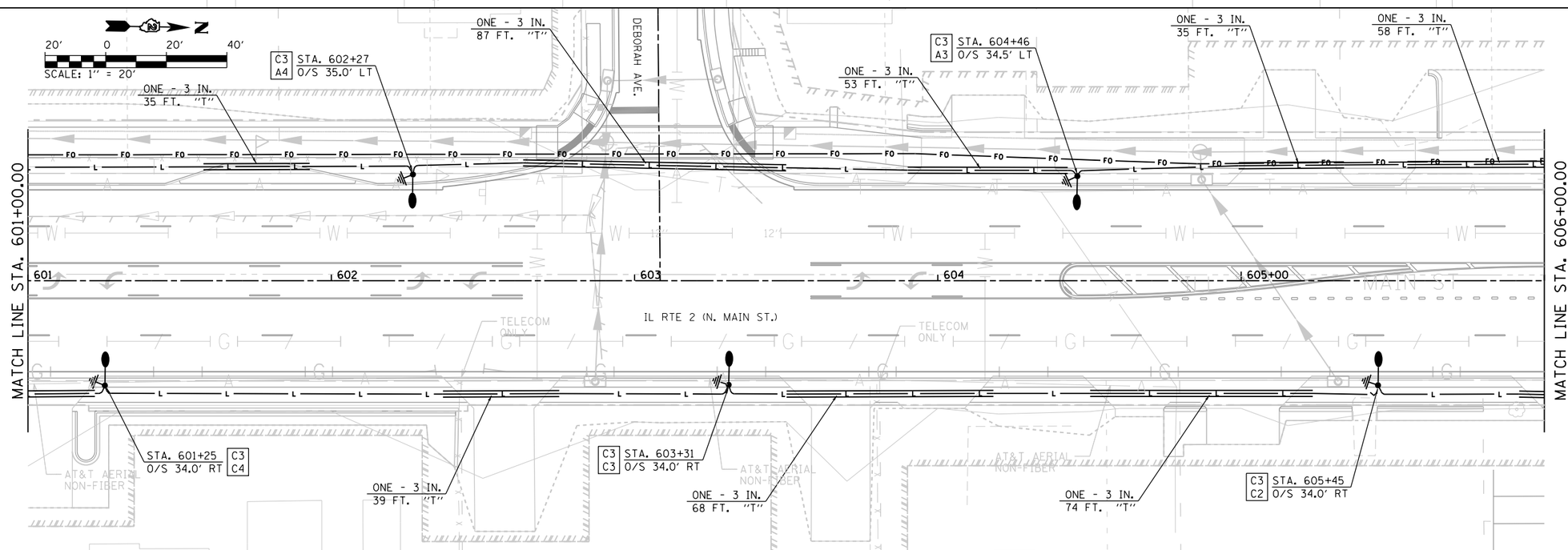

LEGEND

- PROPOSED DECORATIVE LIGHT POLE AND LUMINAIRE ALUMINUM, 40 FT. M.H., PULSE START METAL HALIDE, VERTICAL MOUNT 400 WATT (SEE NOTE 13 ON SHEET 1)
- PROPOSED COMBINATIONAL LIGHT POLE WITH 400W METAL HALIDE PULSE START LUMINAIRE
- PROPOSED UTILITY POLE (BY OTHERS)
- PROPOSED LIGHTING CONTROLLER, 100 AMP, 480V
- PROPOSED HANDHOLE, COMPOSITE CONCRETE
- GROUND ROD, 5/8" DIA. X 10' (SEE SHEET 19 FOR DETAILS)
- —FO— PROPOSED UNDERGROUND CONDUIT, COILABLE NONMETALLIC CONDUIT, 2" DIA. WITH PULL STRING AND 1-1/C NO. 12 TRACER CABLE
- PROPOSED UNDERGROUND CONDUIT, PVC SCHEDULE 80, SIZE AND CONDUCTORS AS INDICATED
- —L— PROPOSED UNIT DUCT, 600V, 2-1/C NO.6, 1/C NO.6 GROUND, (XLP-TYPE USE), 1¼" DIA. POLYETHYLENE
- —E— PROPOSED UNDERGROUND CONDUIT, GALVANIZED STEEL, 2" DIA. WITH 3-1/C NO. 2, 1-1/C NO. 6 GND (XLP-TYPE USE) COST INCIDENTAL TO PAY ITEM "80400100 - NEW ELECTRIC SERVICE INSTALLATION"

"P" PUSHED
"T" TRENCHED

LIGHT POLE IDENTIFICATION
C2 — CONTROLLER
A5 — POLE NUMBER
CIRCUIT

NOTES:

1. REFER TO ROADWAY LIGHTING NOTES ON SHEET 01.
2. LUMINAIRE MOUNTED ON COMBINATION POLE SHALL OPERATE ON 120V AC FROM TRAFFIC SIGNAL CONTROLLER. REFER TO TRAFFIC SIGNAL PLANS.

CMT
License No. 184-000613
© Copyright CMT, Inc.

FILE NAME = D205006-LIGHT10.dgn	DESIGNED - CPT	REVISED -	
MODEL NAME = Default	DRAWN - CPT	REVISED -	
PLOT SCALE = 40.0018 ' / in.	CHECKED - AB	REVISED -	
PLOT DATE = 3/10/2015 - 8:15:54 AM	DATE - 1/9/2015	REVISED -	

STATE OF ILLINOIS
DEPARTMENT OF TRANSPORTATION

ROADWAY LIGHTING PLAN
IL ROUTE 2 (N. MAIN STREET)

SCALE: 1"=20' | SHEET 10 OF 24 SHEETS | STA. 596+00 TO STA. 606+00

F.A.P. RTE.	SECTION	COUNTY	TOTAL SHEETS	SHEET NO.
734	78R-2	WINNEBAGO	926	521
		CONTRACT NO. 64C21		
		ILLINOIS FED. AID PROJECT		

PEN TABLE = RockfordLightung.tbl
PLOT DRIVER = pdfNULAYERSbw.pltcfg

DIRECTORY = L:\ROCKFORD\13260\42_N.MainSt.Lighting\Dwn\CADD_Sheets\Electrical\
USER NAME = Casey Toth

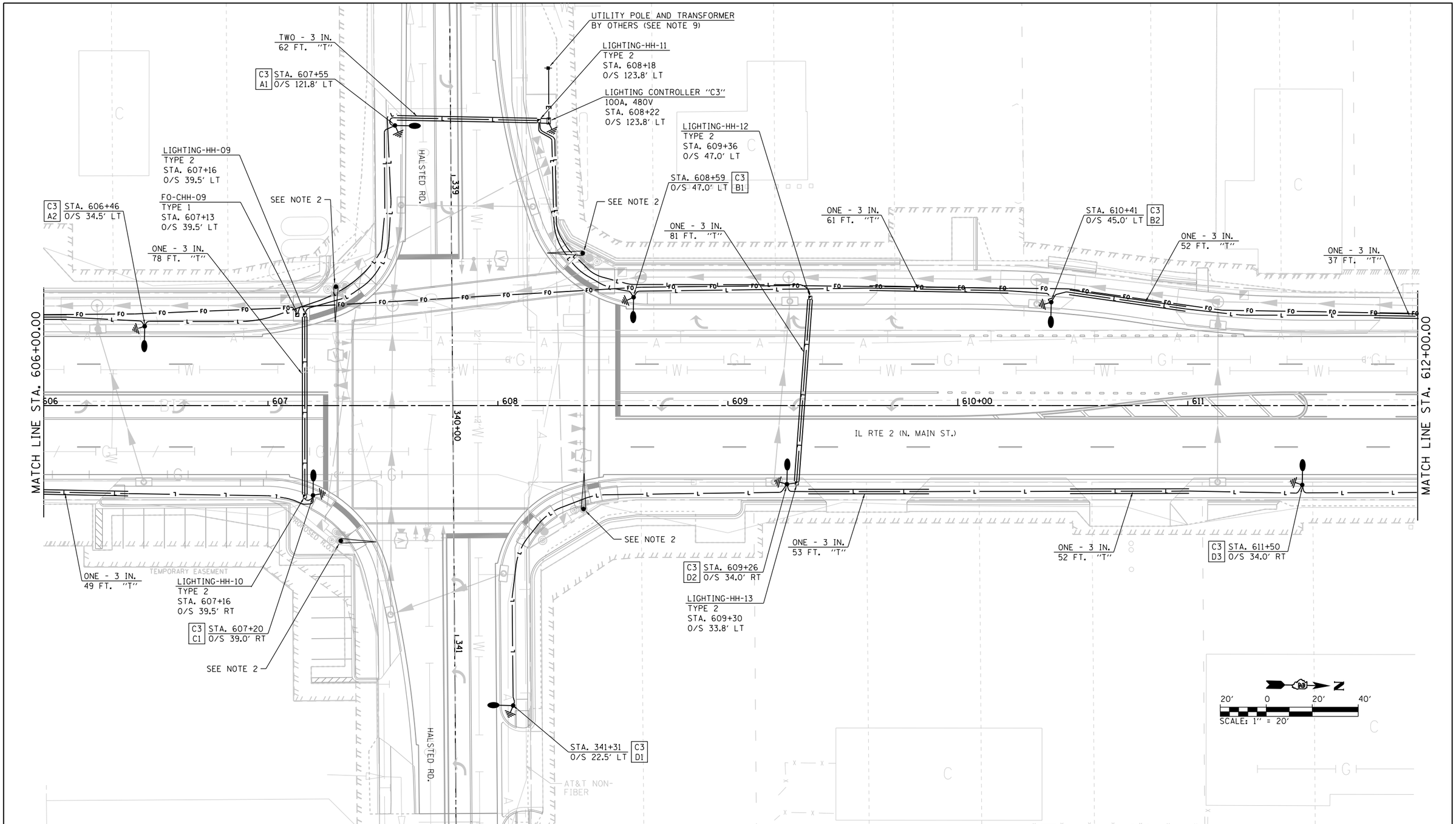

LEGEND

- PROPOSED DECORATIVE LIGHT POLE AND LUMINAIRE ALUMINUM, 40 FT. M.H., PULSE START METAL HALIDE, VERTICAL MOUNT 400 WATT (SEE NOTE 13 ON SHEET 1)
- PROPOSED COMBINATIONAL LIGHT POLE WITH 400W METAL HALIDE PULSE START LUMINAIRE
- PROPOSED UTILITY POLE (BY OTHERS)
- PROPOSED LIGHTING CONTROLLER, 100 AMP, 480V
- PROPOSED HANDHOLE, COMPOSITE CONCRETE
- GROUND ROD, 5/8" DIA. X 10' (SEE SHEET 19 FOR DETAILS)
- —FO— PROPOSED UNDERGROUND CONDUIT, COILABLE NONMETALLIC CONDUIT, 2" DIA. WITH PULL STRING AND 1-1/C NO. 12 TRACER CABLE
- PROPOSED UNDERGROUND CONDUIT, PVC SCHEDULE 80, SIZE AND CONDUCTORS AS INDICATED
- —L— PROPOSED UNIT DUCT, 600V, 2-1/C NO.6, 1/C NO.6 GROUND, (XLP-TYPE USE), 1¼" DIA. POLYETHYLENE
- —E— PROPOSED UNDERGROUND CONDUIT, GALVANIZED STEEL, 2" DIA. WITH 3-1/C NO. 2, 1-1/C NO. 6 GND (XLP-TYPE USE) COST INCIDENTAL TO PAY ITEM "80400100 - NEW ELECTRIC SERVICE INSTALLATION"

"P" PUSHED
"T" TRENCHED

LIGHT POLE IDENTIFICATION
C2 — CONTROLLER
A5 — POLE NUMBER
CIRCUIT

NOTES:

1. REFER TO ROADWAY LIGHTING NOTES ON SHEET 01.
2. LUMINAIRE MOUNTED ON COMBINATION POLE SHALL OPERATE ON 120V AC FROM TRAFFIC SIGNAL CONTROLLER. REFER TO TRAFFIC SIGNAL PLANS.

CMT
License No. 184-000613
©Copyright CMT, Inc.

FILE NAME = D205006-LIGHT11.dgn	DESIGNED - CPT	REVISED -
MODEL NAME = Default	DRAWN - CPT	REVISED -
PLOT SCALE = 40.0018 ' / in.	CHECKED - AB	REVISED -
PLOT DATE = 3/10/2015 - 8:15:58 AM	DATE - 1/9/2015	REVISED -

STATE OF ILLINOIS
DEPARTMENT OF TRANSPORTATION

ROADWAY LIGHTING PLAN
IL ROUTE 2 (N. MAIN STREET)

SCALE: 1"=20' | SHEET 11 OF 24 SHEETS | STA. 606+00 TO STA. 612+00

F.A.P. RTE.	SECTION	COUNTY	TOTAL SHEETS	SHEET NO.
734	78R-2	WINNEBAGO	926	522

CONTRACT NO. 64C21
ILLINOIS FED. AID PROJECT

PEN TABLE = RockfordLightning.tbl
PLOT DRIVER = pdfNULAYERSbw.pltcfg

DIRECTORY = L:\ROCKFORD\13280-R2_N.Main\SL\Lighting\Dwg\CAD\D_Sheets\Electrical\
USER NAME = Casey Tobin

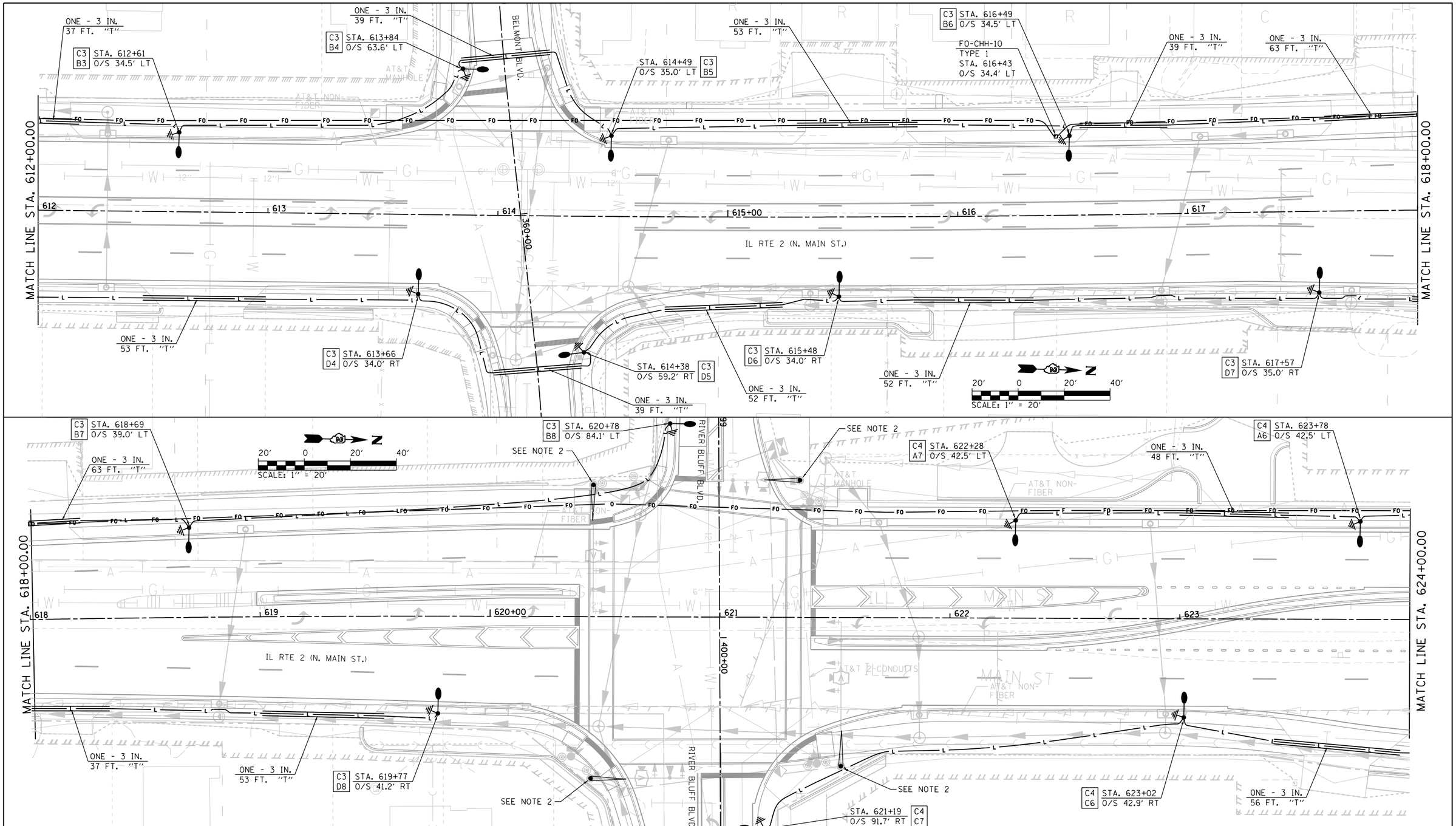

LEGEND

- PROPOSED DECORATIVE LIGHT POLE AND LUMINAIRE ALUMINUM, 40 FT. M.H., PULSE START METAL HALIDE, VERTICAL MOUNT 400 WATT (SEE NOTE 13 ON SHEET 1)
- PROPOSED COMBINATIONAL LIGHT POLE WITH 400W METAL HALIDE PULSE START LUMINAIRE
- PROPOSED UTILITY POLE (BY OTHERS)
- PROPOSED LIGHTING CONTROLLER, 100 AMP, 480V
- PROPOSED HANDHOLE, COMPOSITE CONCRETE
- GROUND ROD, 5/8" DIA. X 10' (SEE SHEET 19 FOR DETAILS)
- —FO— PROPOSED UNDERGROUND CONDUIT, COILABLE NONMETALLIC CONDUIT, 2" DIA. WITH PULL STRING AND 1-1/C NO. 12 TRACER CABLE
- PROPOSED UNDERGROUND CONDUIT, PVC SCHEDULE 80, SIZE AND CONDUCTORS AS INDICATED
- —L— PROPOSED UNIT DUCT, 600V, 2-1/C NO.6, 1/C NO.6 GROUND, (XLP-TYPE USE), 1¼" DIA. POLYETHYLENE
- —E— PROPOSED UNDERGROUND CONDUIT, GALVANIZED STEEL, 2" DIA. WITH 3-1/C NO. 2, 1-1/C NO. 6 GND (XLP-TYPE USE) COST INCIDENTAL TO PAY ITEM "80400100 - NEW ELECTRIC SERVICE INSTALLATION"

"P" PUSHED
"T" TRENCHED

LIGHT POLE IDENTIFICATION
C2 — CONTROLLER
A5 — POLE NUMBER
CIRCUIT

NOTES:

1. REFER TO ROADWAY LIGHTING NOTES ON SHEET 01.
2. LUMINAIRE MOUNTED ON COMBINATION POLE SHALL OPERATE ON 120V AC FROM TRAFFIC SIGNAL CONTROLLER. REFER TO TRAFFIC SIGNAL PLANS.

CMT
License No. 184-000613
© Copyright CMT, Inc.

FILE NAME = D205006-LIGHT12.dgn	DESIGNED - CPT	REVISED -	
MODEL NAME = Default	DRAWN - CPT	REVISED -	
PLOT SCALE = 40.0018 ' / in.	CHECKED - AB	REVISED -	
PLOT DATE = 3/10/2015 - 8:16:00 AM	DATE - 1/9/2015	REVISED -	

STATE OF ILLINOIS
DEPARTMENT OF TRANSPORTATION

ROADWAY LIGHTING PLAN
IL ROUTE 2 (N. MAIN STREET)

SCALE: 1"=20' | SHEET 12 OF 24 SHEETS | STA. 612+00 TO STA. 624+00

F.A.P. RTE.	SECTION	COUNTY	TOTAL SHEETS	SHEET NO.
734	78R-2	WINNEBAGO	926	523

CONTRACT NO. 64C21

ILLINOIS FED. AID PROJECT

PEN TABLE = RockfordLightung.tbl
PLOT DRIVER = pdfNULAYERSbw.pltcfg

DIRECTORY = L:\ROCKFORD\13260-02_NJMdeR\Lighting\Dwn\CADD_Sheets\Electrical\
USER NAME = Casey Tobin

PEN TABLE = RockfordLightingtbl
PLOT DRIVER = pdfNBLAYERSbw.pltcfg

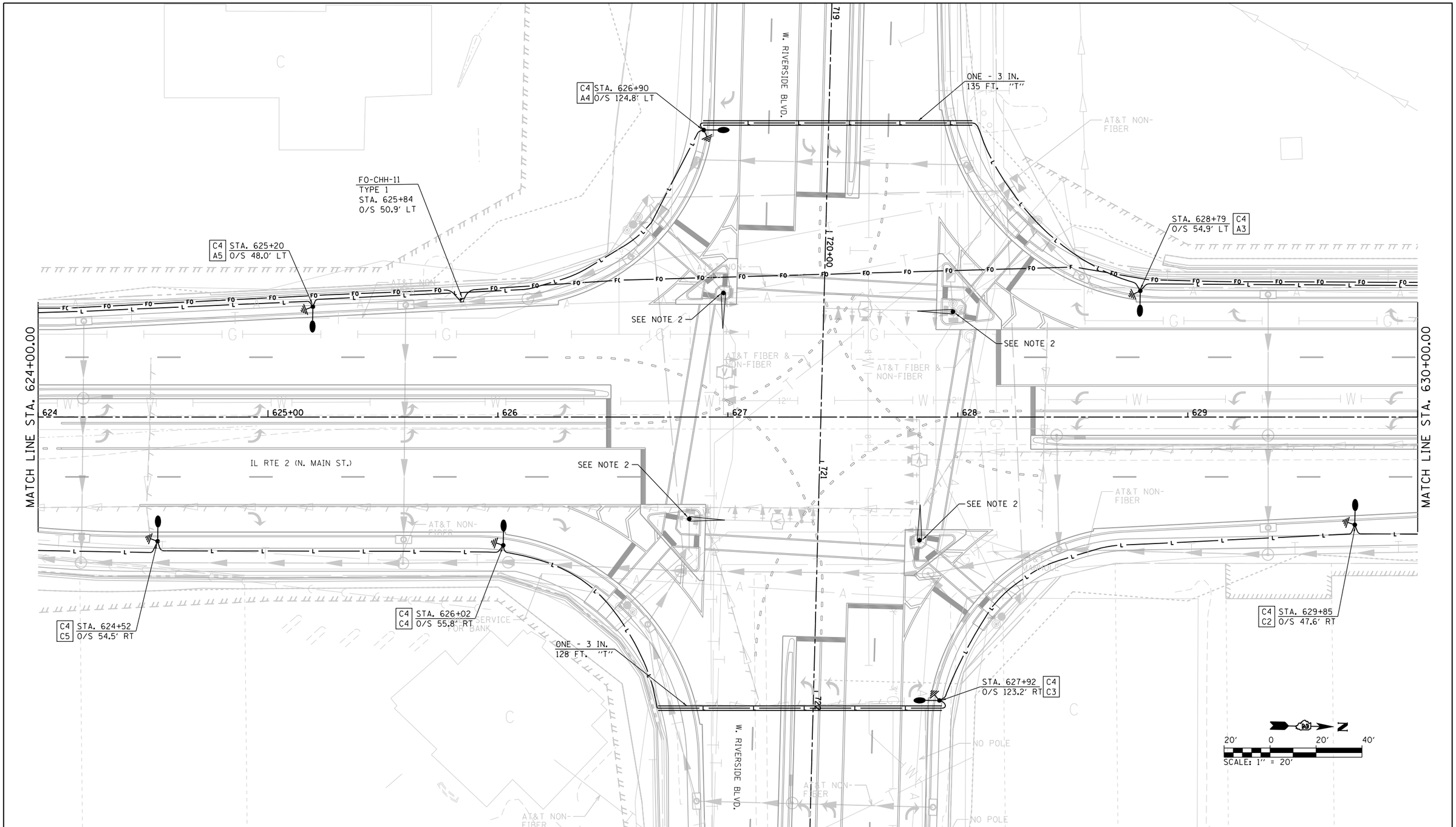

LEGEND

- PROPOSED DECORATIVE LIGHT POLE AND LUMINAIRE ALUMINUM, 40 FT. M.H., PULSE START METAL HALIDE, VERTICAL MOUNT 400 WATT (SEE NOTE 13 ON SHEET 1)
- PROPOSED COMBINATIONAL LIGHT POLE WITH 400W METAL HALIDE PULSE START LUMINAIRE
- PROPOSED UTILITY POLE (BY OTHERS)
- PROPOSED LIGHTING CONTROLLER, 100 AMP, 480V
- PROPOSED HANDHOLE, COMPOSITE CONCRETE
- GROUND ROD, 5/8" DIA. X 10' (SEE SHEET 19 FOR DETAILS)
- —FO— PROPOSED UNDERGROUND CONDUIT, COILABLE NONMETALLIC CONDUIT, 2" DIA. WITH PULL STRING AND 1-1/C NO. 12 TRACER CABLE
- PROPOSED UNDERGROUND CONDUIT, PVC SCHEDULE 80, SIZE AND CONDUCTORS AS INDICATED
- —L— PROPOSED UNIT DUCT, 600V, 2-1/C NO.6, 1/C NO.6 GROUND, (XLP-TYPE USE), 1¼" DIA. POLYETHYLENE
- —E— PROPOSED UNDERGROUND CONDUIT, GALVANIZED STEEL, 2" DIA. WITH 3-1/C NO. 2, 1-1/C NO. 6 GND (XLP-TYPE USE) COST INCIDENTAL TO PAY ITEM "80400100 - NEW ELECTRIC SERVICE INSTALLATION"

"P" PUSHED
"T" TRENCHED

LIGHT POLE IDENTIFICATION
C2 — CONTROLLER
A5 — POLE NUMBER
CIRCUIT

NOTES:

1. REFER TO ROADWAY LIGHTING NOTES ON SHEET 01.
2. LUMINAIRE MOUNTED ON COMBINATION POLE SHALL OPERATE ON 120V AC FROM TRAFFIC SIGNAL CONTROLLER. REFER TO TRAFFIC SIGNAL PLANS.

CMT
License No. 184-000613 ©Copyright CMT, Inc.

FILE NAME = D205006-LIGHT13.dgn	DESIGNED - CPT	REVISED -	
MODEL NAME = Default	DRAWN - CPT	REVISED -	
PLOT SCALE = 40.0018 ' / in.	CHECKED - AB	REVISED -	
PLOT DATE = 3/10/2015 - 8:16:02 AM	DATE - 1/9/2015	REVISED -	

STATE OF ILLINOIS
DEPARTMENT OF TRANSPORTATION

ROADWAY LIGHTING PLAN
IL ROUTE 2 (N. MAIN STREET)

SCALE: 1"=20' | SHEET 13 OF 24 SHEETS | STA. 624+00 TO STA. 630+00

F.A.P. RTE.	SECTION	COUNTY	TOTAL SHEETS	SHEET NO.
734	78R-2	WINNEBAGO	926	524

CONTRACT NO. 64C21
ILLINOIS FED. AID PROJECT

DIRECTORY = L:\ROCKFORD\13260\02_N.MainSt\Lighting\Dwg\CADD_Sheets\Electrical\
USER NAME = Casey Tobin

PEN TABLE = RockfordLightingtbl
PLOT DRIVER = pdfNOLAYERSbw.pltcfg

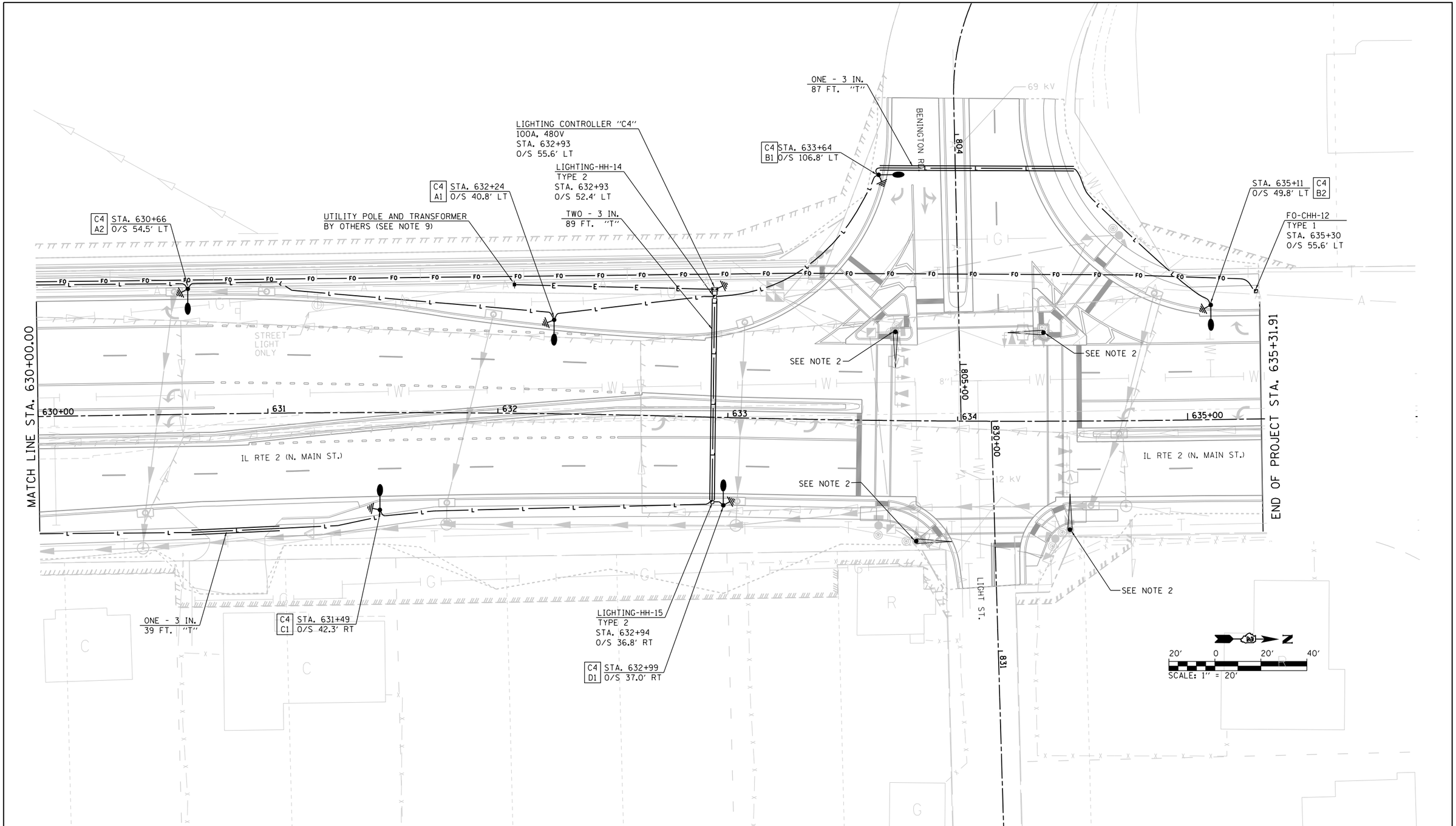

LEGEND

- PROPOSED DECORATIVE LIGHT POLE AND LUMINAIRE ALUMINUM, 40 FT. M.H., PULSE START METAL HALIDE, VERTICAL MOUNT 400 WATT (SEE NOTE 13 ON SHEET 1)
- PROPOSED COMBINATIONAL LIGHT POLE WITH 400W METAL HALIDE PULSE START LUMINAIRE
- PROPOSED UTILITY POLE (BY OTHERS)
- PROPOSED LIGHTING CONTROLLER, 100 AMP, 480V
- PROPOSED HANDHOLE, COMPOSITE CONCRETE
- GROUND ROD, 5/8" DIA. X 10' (SEE SHEET 19 FOR DETAILS)
- —FO— PROPOSED UNDERGROUND CONDUIT, COILABLE NONMETALLIC CONDUIT, 2" DIA. WITH PULL STRING AND 1-1/C NO. 12 TRACER CABLE
- PROPOSED UNDERGROUND CONDUIT, PVC SCHEDULE 80, SIZE AND CONDUCTORS AS INDICATED
- —L— PROPOSED UNIT DUCT, 600V, 2-1/C NO.6, 1/C NO.6 GROUND, (XLP-TYPE USE), 1¼" DIA. POLYETHYLENE
- —E— PROPOSED UNDERGROUND CONDUIT, GALVANIZED STEEL, 2" DIA. WITH 3-1/C NO. 2, 1-1/C NO. 6 GND (XLP-TYPE USE) COST INCIDENTAL TO PAY ITEM "80400100 - NEW ELECTRIC SERVICE INSTALLATION"

"P" PUSHED
"T" TRENCHED

LIGHT POLE IDENTIFICATION
C2 — CONTROLLER
A5 — POLE NUMBER
CIRCUIT

NOTES:

1. REFER TO ROADWAY LIGHTING NOTES ON SHEET 01.
2. LUMINAIRE MOUNTED ON COMBINATION POLE SHALL OPERATE ON 120V AC FROM TRAFFIC SIGNAL CONTROLLER. REFER TO TRAFFIC SIGNAL PLANS.

CMT
License No. 184-000613
© Copyright CMT, Inc.

FILE NAME = D205006-LIGHT14.dgn	DESIGNED - CPT	REVISED -	
MODEL NAME = Default	DRAWN - CPT	REVISED -	
PLOT SCALE = 40.0018 ' / in.	CHECKED - AB	REVISED -	
PLOT DATE = 3/10/2015 - 8:16:04 AM	DATE - 1/9/2015	REVISED -	

STATE OF ILLINOIS
DEPARTMENT OF TRANSPORTATION

ROADWAY LIGHTING PLAN
IL ROUTE 2 (N. MAIN STREET)

SCALE: 1"=20' | SHEET 14 OF 24 SHEETS | STA. 630+00 TO STA. 635+31.91

F.A.P. RTE.	SECTION	COUNTY	TOTAL SHEETS	SHEET NO.
734	78R-2	WINNEBAGO	926	525

CONTRACT NO. 64C21

ILLINOIS FED. AID PROJECT

DIRECTORY = L:\ROCKFORD\1326\42_N.MainSt.Lighting\Dsn\CADD_Sheets\Electrical\
USER NAME = Casey Toth

SPECIFICATIONS/DATA

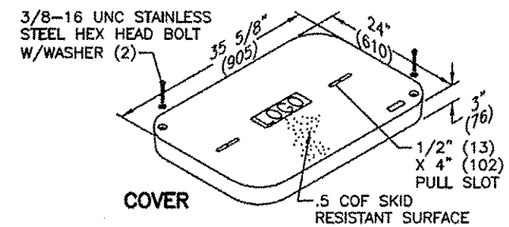

COVER

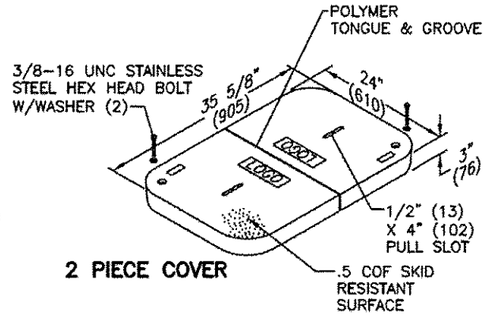

2 PIECE COVER

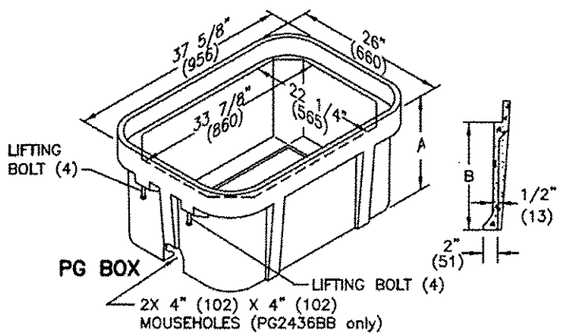

PG BOX

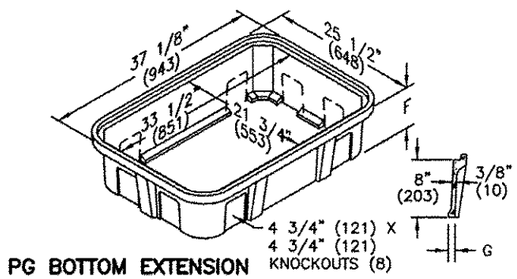

PG BOTTOM EXTENSION

24" x 36" PG Style (Stackable) Assembly

SPECIFICATIONS/DATA

Covers (Blank unless logo is specified)

DESCRIPTION	PART NO.	WEIGHT #	DESIGN/TEST LOAD #	ANSI TIER*
W/2 Bolts	PG2436CA00	100 (45 kg)	8,000 / 12,000	8
Gasketed w/2 Bolts	PG2436CG00	100 (45 kg)	8,000 / 12,000	8
2-Piece w/2 Bolts	PG2436CS00	122 (55 kg)	8,000 / 12,000	8
No Bolts	PG2436WA00	100 (45 kg)	8,000 / 12,000	8
~~Heavy Duty w/2 Bolts~~	~~PG2436HA00~~	~~115 (52 kg)~~	~~15,000 / 22,500~~	~~15~~
Gasketed Heavy Duty w/2 Bolts	PG2436HG00	115 (52 kg)	15,000 / 22,500	15
~~Heavy Duty 2-Piece w/2 Bolts~~	~~PG2436HS00~~	~~122 (55 kg)~~	~~15,000 / 22,500~~	~~15~~
Heavy Duty w/2 Bolts	PG2436HH00	122 (55 kg)	22,500 / 33,750	22

SEE NOTE 1

- Gasketed covers and bolt grommets must be used with a gasketed box. Gaskets reduce the inflow of fluids but do not make the enclosure water tight.

PG Boxes (Stackable with self-aligning, replaceable EZ Nut) **24" - 42" Deep boxes must be used as bottom of any stack.)

DESCRIPTION	PART NO.	WEIGHT #	DIMENSION A	DIMENSION B	DESIGN/TEST LOAD #	ANSI TIER*
Open Bottom	~~PG2436BA18~~	~~141 (64 kg)~~	18" (457 mm)	15" (381 mm)	~~22,500 / 33,750~~	22
	PG2436BA24	180 (81.6 kg)	~~24" (610 mm)~~	~~21" (533 mm)~~	22,500 / 33,750	22
	~~PG2436BA30~~	~~196 (88.9 kg)~~	~~30" (762 mm)~~	~~27" (686 mm)~~	~~22,500 / 33,750~~	~~22~~
	PG2436BA36	254 (115 kg)	36" (914 mm)	33" (838 mm)	22,500 / 33,750	22
	~~PG2436BA42~~	~~293 (133 kg)~~	~~42" (1067 mm)~~	~~39" (991 mm)~~	~~22,500 / 33,750~~	~~22~~
Open Bottom w/2 Mouseholes	~~PG2436BB18~~	139 (63.1 kg)	18" (457 mm)	15" (381 mm)	22,500 / 33,750	22
	PG2436BB24	~~178 (80.7 kg)~~	24" (610 mm)	21" (533 mm)	22,500 / 33,750	22
	PG2436BB30	194 (88.0 kg)	30" (762 mm)	27" (686 mm)	~~22,500~~ / 33,750	22
	PG2436BB36	252 (114 kg)	36" (914 mm)	33" (838 mm)	22,500 / 33,750	22
	PG2436BB42	293 (133 kg)	42" (1067 mm)	39" (991 mm)	22,500 / 33,750	22
Solid Bottom	PG2436DA18	171 (78 kg)	18 1/2" (470 mm)	15" (381 mm)	22,500 / 33,750	22
	PG2436DA24	228 (103.4 kg)	24 1/2" (622 mm)	21" (533 mm)	~~22,500~~ / 33,750	22
	PG2436DA30	~~238 (107.0 kg)~~	30 1/2" (775 mm)	27" (686 mm)	22,500 / ~~33,750~~	22
	~~PG2436DA36~~	282 (128 kg)	36 1/2" (927 mm)	33" (838 mm)	22,500 / 33,750	22
	~~PG2436DA42~~	321 (146 kg)	42 1/2" (1080 mm)	39" (991 mm)	22,500 / 33,750	22

SEE NOTE 1

NOTE:

1. OR APPROVED EQUAL

Extensions (For use under 18" deep box only, one per box.)

DESCRIPTION	~~PART NO.~~	WEIGHT #	DIMENSION F	DIMENSION G	DESIGN/TEST LOAD #	ANSI TIER*
Open Bottom	~~PG2436EA08~~	81 (37 kg)	8 3/4" (222 mm)	1" (25 mm)	22,500 / 33,750	22
Solid Bottom	~~PG2436RA08~~	95 (43.1 kg)	9 1/4" (235 mm)	N/A	22,500 / 33,750	22

Dimensions & weights in parentheses are metric equivalent.

* Loadings comply with ANSI/SCTE 77

HANDHOLES
24"X36" PG STYLE (STACKABLE) ASSEMBLY

SPECIFICATIONS/DATA

30" x 48" PG Style (Stackable) Assembly

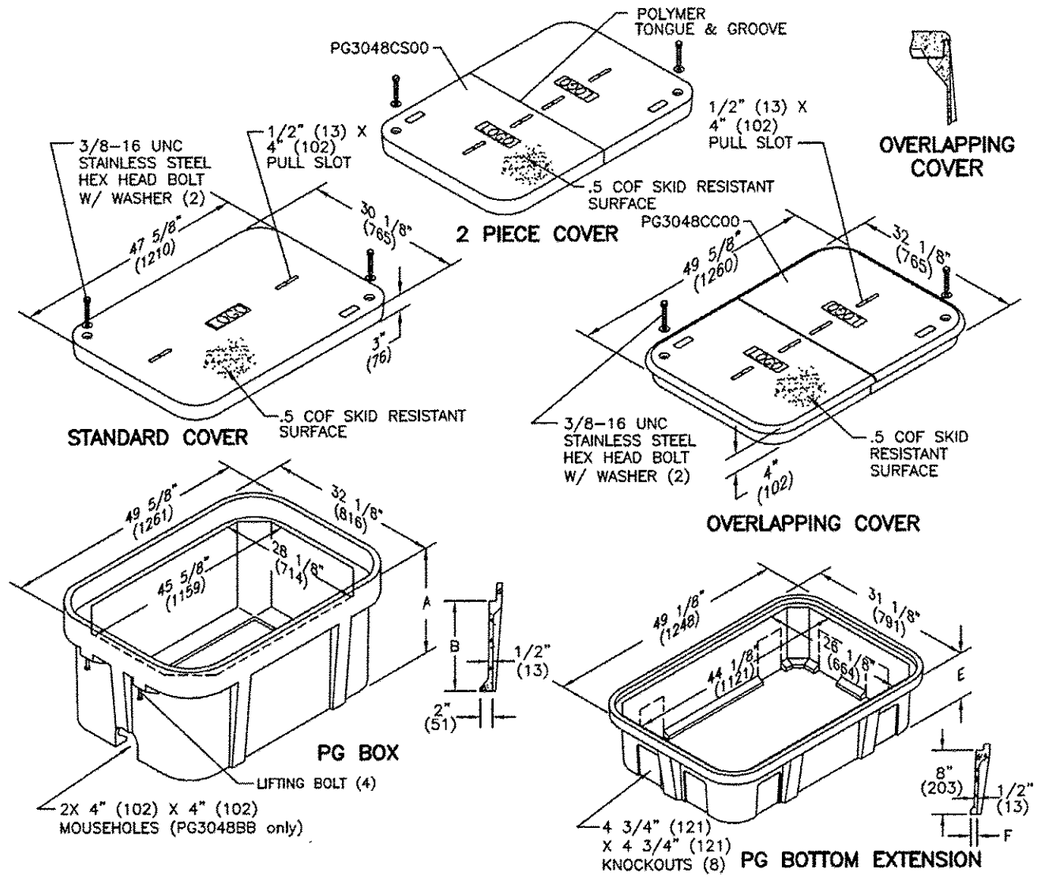

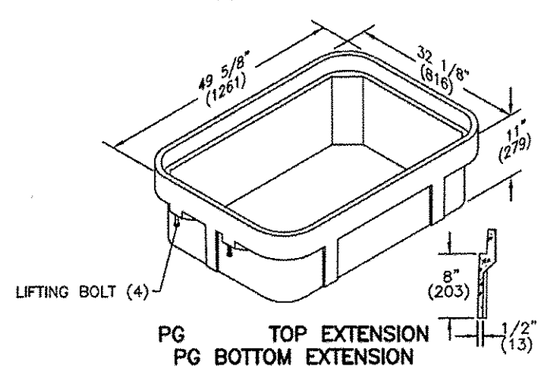

SPECIFICATIONS/DATA

30" x 48" PG Style (Stackable) Assembly

Covers (Blank unless logo is specified)

DESCRIPTION	PART NO.	WEIGHT #	DESIGN/TEST LOAD	ANSI TIER*
W/2 Bolts	PG3048CA00	159 (72.1 kg)	8,000 / 12,000	8
Gasketed w/2 Bolts	PG3048CG00	159 (72.1 kg)	8,000 / 12,000	8
No Bolts	PG3048WA00	159 (72.1 kg)	8,000 / 12,000	8
~~Heavy Duty w/2 Bolts~~	~~PG3048HA00~~	~~206 (93.4 kg)~~	~~15,000 / 22,500~~	~~15~~
Gasketed Heavy Duty w/2 Bolts	PG3048HG00	206 (93.4 kg)	15,000 / 22,500	15
~~Extra Heavy Duty w/2 Bolts~~	~~PG3048HH00~~	~~220 (99.7 kg)~~	~~22,500 / 33,750~~	~~22~~
2-piece w/2 Bolts	PG3048CS00	181 (82.1 kg)	8,000 / 12,000	8
Heavy Duty 2-piece w/2 Bolts	PG3048HS00	206 (93.4 kg)	15,000 / 22,500	15
2-piece Overlapping	PG3048CC00	248 (112.0 kg)	8,000 / 12,000	8
Heavy Duty 2-piece Overlapping	PG3048HC00	248 (112.0 kg)	15,000 / 22,500	15

SEE NOTE 1

* Gasketed covers and bolt grommets must be used with a gasketed box. Gaskets reduce the inflow of fluids but do not make the enclosure water tight.

PG Boxes (Stackable with self-aligning, replaceable EZ-Nut) *24" & 36" deep boxes must be used as bottom of any stack

DESCRIPTION		PART NO.	WEIGHT #	DIMENSION A	DIMENSION B	DESIGN/TEST LOAD #	ANSI TIER*
Open Bottom		~~PG3048BA18~~	~~185 (83.9 kg)~~	~~18" (457 mm)~~	~~15" (381 mm)~~	~~22,500 / 33,750~~	~~22~~
	*	~~PG3048BA24~~	~~236 (107.0 kg)~~	~~24" (609 mm)~~	~~21" (533 mm)~~	~~22,500 / 33,750~~	~~22~~
	*	PG3048BA36	343 (155.6 kg)	36" (914 mm)	33" (838 mm)	22,500 / 33,750	22
Open Bottom w/ Gasket		~~PG3048BG18~~	~~185 (83.9 kg)~~	~~18" (457 mm)~~	~~15" (381 mm)~~	~~22,500 / 33,750~~	~~22~~
	*	PG3048BG24	236 (107.0 kg)	24" (609 mm)	21" (533 mm)	22,500 / 33,750	22
	*	PG3048BG36	343 (155.6 kg)	36" (914 mm)	33" (838 mm)	22,500 / 33,750	22
Open Bottom w/ 2 Mouseholes		PG3048BB18	185 (83.9 kg)	18" (457 mm)	15" (381 mm)	22,500 / 33,750	22
	*	PG3048BB24	236 (107.0 kg)	24" (610 mm)	21" (533 mm)	22,500 / 33,750	22
	*	PG3048BB36	343 (155.6 kg)	36" (914 mm)	33" (838 mm)	22,500 / 33,750	22
Solid Bottom		PG3048DA18	220 (99.8 kg)	18 1/2" (470 mm)	15" (381 mm)	22,500 / 33,750	22
	*	PG3048DA24	287 (130.2 kg)	24 1/2" (622 mm)	21" (533 mm)	22,500 / 33,750	22
	*	PG3048DA36	394 (178.7 kg)	36 1/2" (927 mm)	33" (838 mm)	22,500 / 33,750	22
Solid Bottom w/ Gasket		PG3048DG18	220 (99.8 kg)	18 1/2" (470 mm)	15" (381 mm)	22,500 / 33,750	22
	*	PG3048DG24	287 (130.2 kg)	24 1/2" (622 mm)	21" (533 mm)	22,500 / 33,750	22
	*	PG3048DG36	394 (178.7 kg)	36 1/2" (927 mm)	33" (838 mm)	22,500 / 33,750	22

SEE NOTE 1

NOTE:

1. OR APPROVED EQUAL

Top Extension (For use on top of PG boxes of any depth)

DESCRIPTION	PART NO.	WEIGHT #	DESIGN/TEST LOAD #	ANSI TIER*
Open Bottom*	PG3048EA11	100 (45.4 kg)	22,500 / 33,750	22

* In addition, this extension can be used as a bottom extension for 18" deep PG boxes.

Bottom Extensions (For use under 18" deep PG style box only, one per box)

DESCRIPTION	PART NO.	WEIGHT #	DIMENSION E	DIMENSION F	DESIGN/TEST LOAD #	ANSI TIER*
Open Bottom	PG3048EA08	102 (46.3 kg)	8 3/4" (222 mm)	1" (25 mm)	22,500 / 33,750	22
Solid Bottom	PG3048RA08	151 (68.0 kg)	9 1/4" (235 mm)	N/A	22,500 / 33,750	22

Dimensions & weights in parentheses are metric equivalent.

* Loadings comply with ANSI/SCTE 77

HANDHOLES
30"X48" PG STYLE (STACKABLE) ASSEMBLY

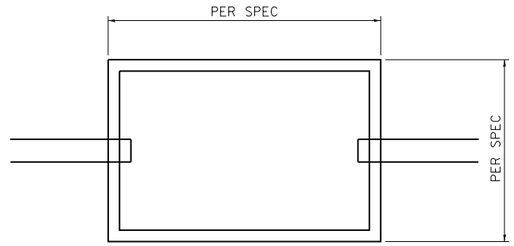

TOP VIEW

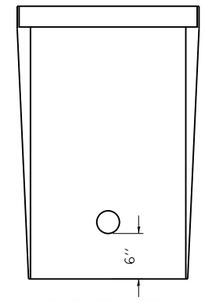

FRONT VIEW

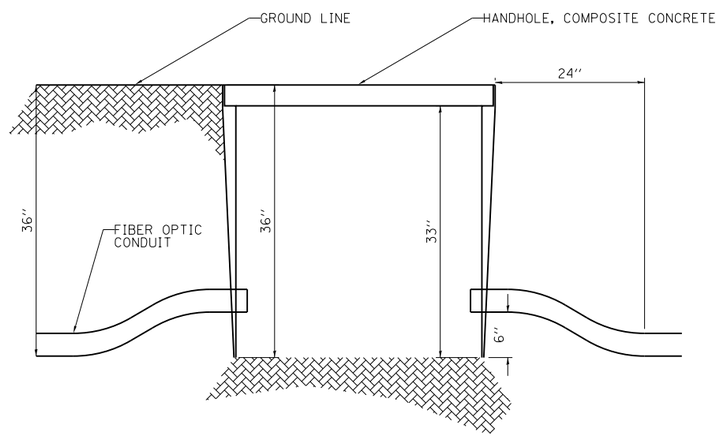

SIDE VIEW

FIBER OPTIC HANDHOLE

1

N.T.S.

PEN TABLE = RockfordLightng.tbl
PLOT DRIVER = pdfNULAYERSbw.pltcfg

DIRECTORY = L:\ROCKFORD\13280-02_N.Main\SL\plrlng\Dwn\CADD_Sheets\Electrical\
USER NAME = Casey Tobin

CMT License No. 184-000613 ©Copyright CMT, Inc.	FILE NAME = D205006-LIGHT17.dgn	DESIGNED - CPT	REVISED -	STATE OF ILLINOIS DEPARTMENT OF TRANSPORTATION	ROADWAY LIGHTING DETAIL FIBER OPTIC HANDHOLE	F.A.P. RTE.	SECTION	COUNTY	TOTAL SHEETS / SHEET NO.
	MODEL NAME = Default	DRAWN - JWD	REVISED -			734	78R-2	WINNEBAGO	926 / 528
	PLOT SCALE = 40.0018 ' / in.	CHECKED - AB	REVISED -					CONTRACT NO. 64C21	
	PLOT DATE = 3/10/2015 - 8:16:26 AM	DATE - 1/9/2015	REVISED -		SCALE: N/A / SHEET 17 OF 24 SHEETS / STA. N/A / TO STA. N/A			ILLINOIS FED. AID PROJECT	

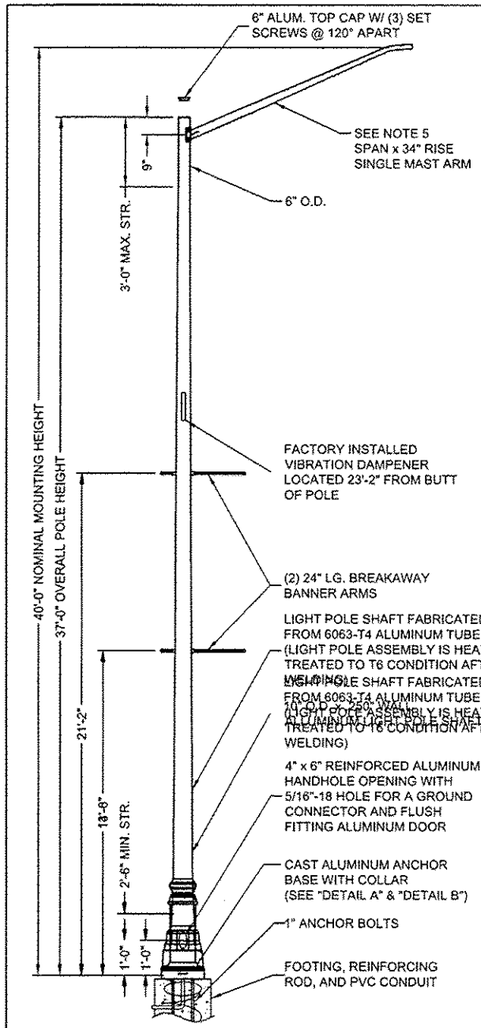

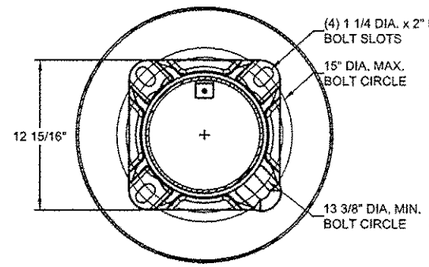

DETAIL B

NOTES:

1. UNITS SHALL BE MANUFACTURED ACCORDING TO AASHTO "STANDARD SPECIFICATIOS FOR STRUCTURAL SUPPORTS FOR HIGHWAY SIGNS, LUMINAIRES AND TRAFFIC SIGNALS" CURRENT AT THE TIME THE PROJECT IS ADVERTISED. LIGHT POLES SHALL BE DESIGNED FOR 90 MPH WIND VELOCITY AND A MINIMUM DESIGN LIFE OF 50 YEARS.
2. POLES SHALL BE DESIGNED TO WITHSTAND LOADING OF 75 LB. LUMINAIRE WITH AN EPA OF 1.6 SQ. FT. INCLUDING ALL ATTACHMENTS.

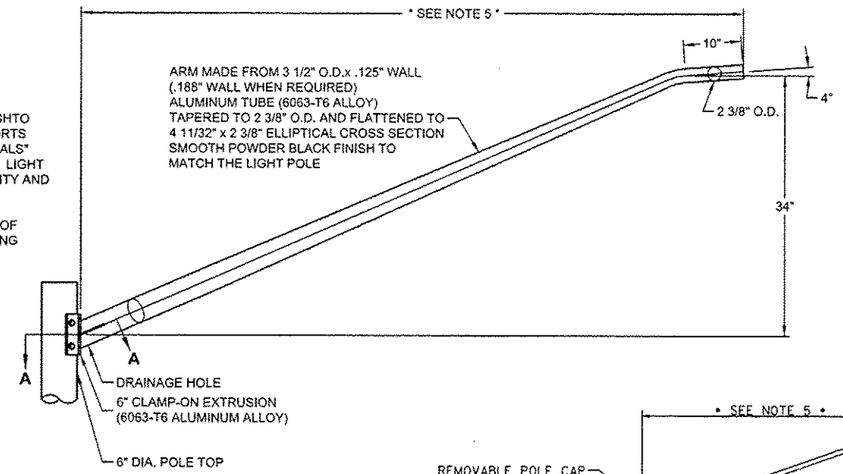

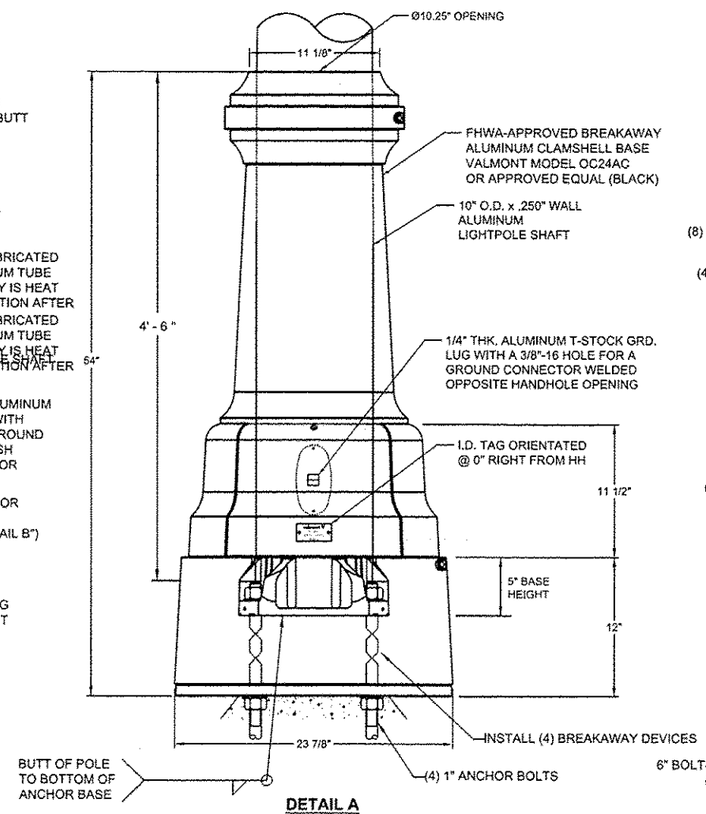

DETAIL A

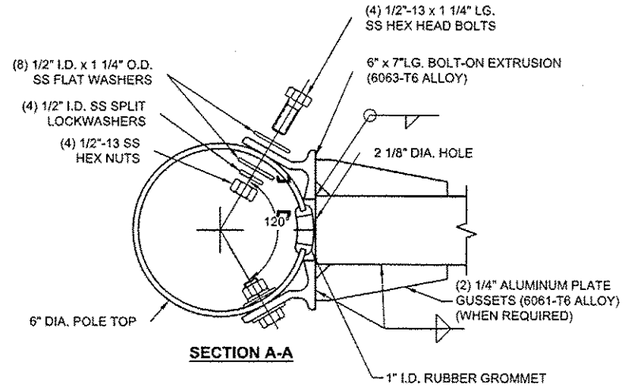

SECTION A-A

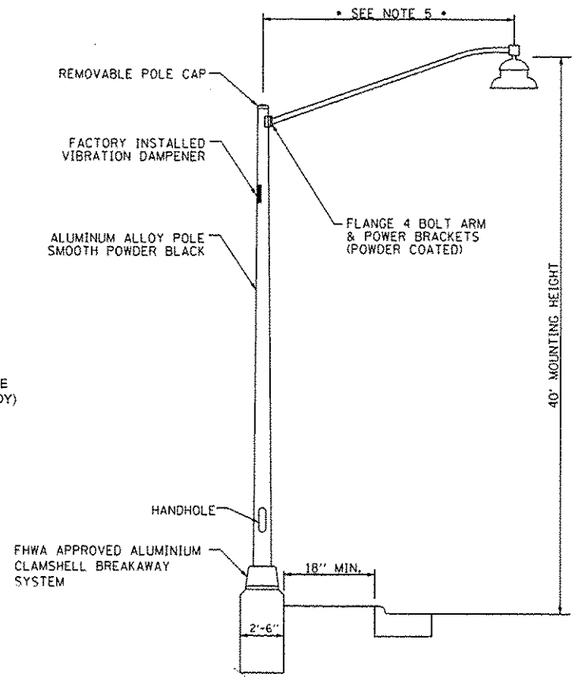

LIGHT POLE, SPECIAL

NOT TO SCALE

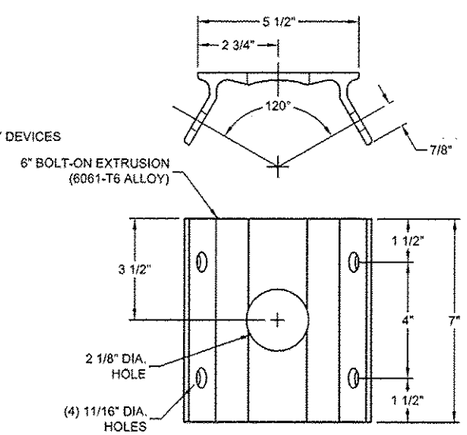

EXTRUSION DETAIL

LIGHT POLE, SPECIAL, LUMINAIRE SCHEDULE

TYPE	DESCRIPTION	MANUFACTURER	POLE	LAMP	VOLTAGE
LIGHT POLE, SPECIAL	DOMUS 55 SERIES, TYPE III CUTOFF CATALOG DMS55-400PSMH-SG3-480V*	LUMEC *	VALMONT * 40 FT M.H., WITH CLAMSHELL BASE ON CONCRETE FOUNDATION MAST ARM LENGTH AS SPECIFIED	400W M.H. PULSE START	480 V

* OR APPROVED EQUAL

NOTE:
1. WELDING WIRE (ER4043).
2. MAST ARM HEAT TREATED AFTER FABRICATION TO T6 CONDITION.
3. ALL HARDWARE IS 300 SERIES STAINLESS STEEL, COATED WITH ANTI-SEIZE COMPOUND.

NOTES:

1. REFER TO ROADWAY LIGHTING DETAIL FOR LIGHT POLE FOUNDATION DETAIL ~~(BE-301)~~.
2. REFER TO ROADWAY LIGHTING DETAIL POLE WIRING DETAIL ~~(BE-702)~~
3. REFER TO ROADWAY LIGHTING DETAIL CONDUIT TRENCH - PHOTOCELL MOUNTING
4. REFER TO DETAIL A ON THIS SHEET.
5. SPAN LENGTH SHALL BE 6', 8', 10' OR 12'. REFER TO NOTE 13, SEE SHEET 1 FOR WHICH LENGTH.

PEN TABLE = Rockford.Lightingtbl
PLOT DRIVER = pdfWOLAYERS-wpltcfg

DIRECTORY = U:\DOCS\D0101350\2_N\Work\Lighting\Dgn\CADD_Stands\Electrical\
USER NAME = Corey Cook

CMT
License No. 184-000613

FILE NAME = 0305006-LIGHT18.dgn	DESIGNED - CPT	REVISED -	
MODEL NAME = Default	DRAWN - JWD	REVISED -	
PLOT SCALE = 40.0000 ' / in.	CHECKED - AB	REVISED -	
PLOT DATE = 3/10/2015 - 8:16:38 AM	DATE - 1/9/2015	REVISED -	

STATE OF ILLINOIS
DEPARTMENT OF TRANSPORTATION

ROADWAY LIGHTING DETAIL
DECORATIVE LIGHT POLES – LUMINAIRE SCHEDULE

SCALE: N/A | SHEET 18 OF 24 SHEETS | STA. N/A TO STA. N/A

F.A.P. RTE.	SECTION	COUNTY	TOTAL SHEETS	SHEET NO.
734	78R-2	WINNEBAGO	926	529

CONTRACT NO. 64C21

ILLINOIS FED. AID PROJECT

LIGHT POLE FOUNDATION DEPTH TABLE
40 FT. (12.192 m) TO 47.5 FT. (14.478 m) MOUNTING HEIGHT

SOIL CONDITIONS	DESIGN DEPTH "D" OF FOUNDATION	
	SINGLE ARM POLE	TWIN ARM POLE
SOFT CLAY Qu = 0.375 TON/SQ. FT.	13'-0" (3.96 m)	15'-0" (4.57 m)
MEDIUM CLAY Qu = 0.75 TON/SQ.FT	9'-6" (2.09 m)	10'-9" (3.23 m)
STIFF CLAY Qu = 1.50 TON/SQ. FT.	7'-0" (2.13 m)	8'-0" (2.44 m)
LOOSE SAND ø = 34°	9'-0" (2.74 m)	10'-0" (3.05 m)
MEDIUM SAND ø = 37.5°	8'-3" (2.52 m)	9'-0" (2.74 m)
DENSE SAND ø = 40°	7'-9" (2.36 m)	9'-0" (2.74 m)

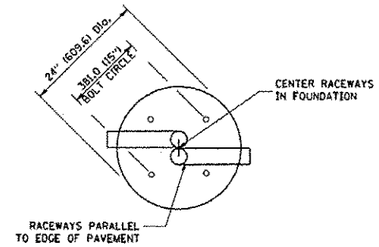

TOP VIEW

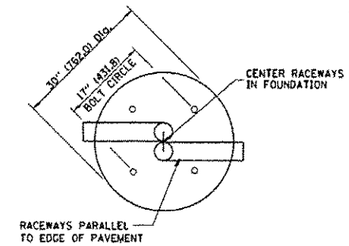

TOP VIEW

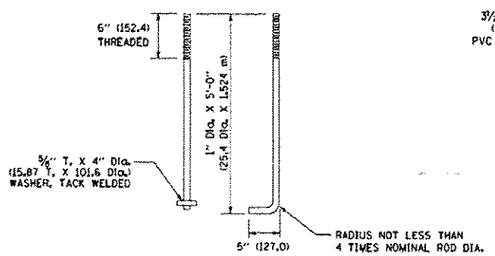

ANCHOR ROD DETAIL

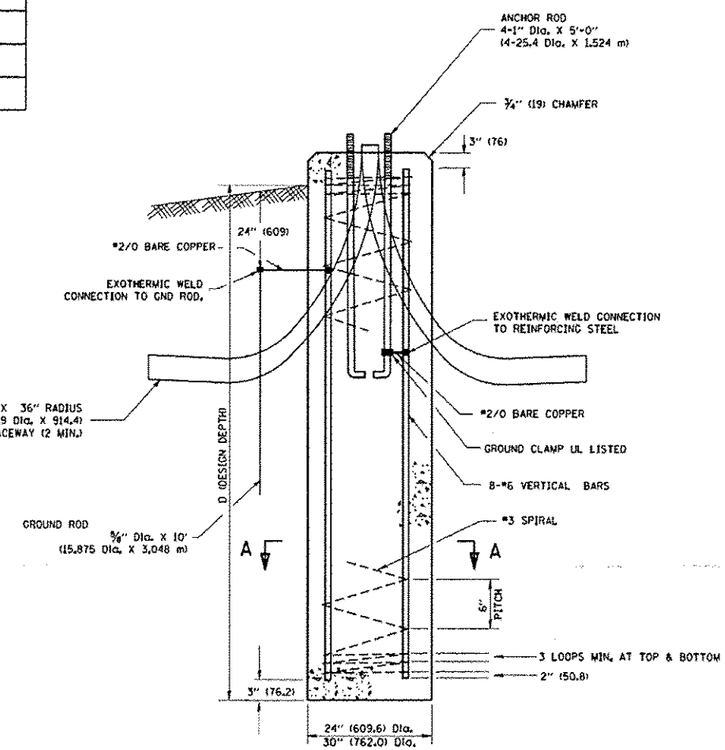

FOUNDATION DETAIL

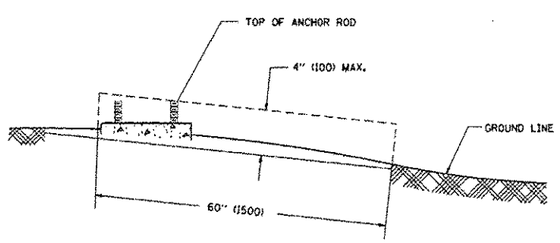

FOUNDATION EXTENSION DETAIL

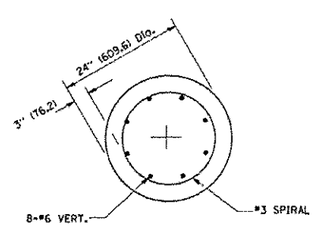

SECTION A-A

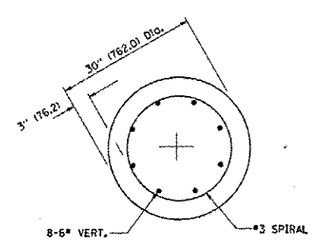

SECTION A-A

NOTES

1. ALL DIMENSIONS ARE IN INCHES (MILLIMETERS) UNLESS OTHERWISE SHOWN.
2. THE ANCHOR RODS AND RACEWAYS SHALL BE PROPERLY SECURED IN PLACE BEFORE THE CONCRETE IN PLACED.
3. THE FOUNDATION SHALL NOT PROTRUDE MORE THAN 4 IN. (100 MM) ABOVE THE FINISHED GRADE WITHIN A 60 IN. (1.5 m) CHORD ACROSS THE FOUNDATION, WITH ANCHOR RODS INCLUDED, IN ACCORDANCE WITH AASHTO GUIDELINES. IF THE FOUNDATION HEIGHT, INCLUDING ANCHOR RODS, EXTENDS BEYOND THESE SPECIFIED LIMITS, THE FOUNDATION SHALL BE REPLACED AT THE CONTRACTOR'S EXPENSE. SEE FOUNDATION EXTENSION DETAIL.
4. THE HOLE FOR THE FOUNDATION SHALL BE MADE BY DRILLING WITH AN AUGER, OF THE SAME DIAMETER AS THE FOUNDATION. IF SOIL CONDITIONS REQUIRE THE USE OF A LINER TO FORM THE HOLE, THE LINER SHALL BE WITHDRAWN AS THE CONCRETE IS DEPOSITED.
5. THE TOP OF THE FOUNDATION SHALL BE CONSTRUCTED LEVEL. A LINER OR FORM SHALL BE USED TO PRODUCE A UNIFORM SMOOTH SIDE TO THE TOP OF THE FOUNDATION. FOUNDATION TOP SHALL BE CHAMFERED 3/4-IN. (20 mm).
6. THE CONCRETE SHALL BE CLASS SI. CONCRETE SHALL CURE ACCORDING TO ARTICLE 1020.13 BEFORE LIGHT POLES ARE INSTALLED.
7. THE ANCHOR ROD SHALL BE A HOOK ROD TYPE. COLD BENDING OF THE ANCHOR ROD WILL NOT BE ALLOWED. THE RADIUS OF THE HOOK BEND SHALL NOT BE LESS THAN 4 TIMES THE NOMINAL DIAMETER OF THE ANCHOR ROD. A TACK WELDED ANCHOR ROD MAY BE SUBSTITUTED WITH THE APPROVAL OF THE ENGINEER.
8. THE ANCHOR RODS SHALL BE ACCORDING TO ASTM F1554 GRADE 725 (GRADE 105). NUTS SHALL BE HEXAGON NUTS ACCORDING TO ASTM A 194 2H OR ASTM A 563 DH, AND WASHERS SHALL BE ACCORDING TO ASTM F 436.
9. ANCHOR RODS, NUTS AND WASHERS SHALL BE COMPLETELY GALVANIZED BY EITHER THE HOT-DIPPED PROCESS CONFORMING WITH AASHTO M 232, THE MECHANICAL PLATING METHOD CONFORMING TO AASHTO M 298, CLASS 50 WITH A MAXIMUM COATING THICKNESS OF 150 UM(6 MILS) OR THE ELECTROLYTIC PROCESS ACCORDING TO ASTM F 1136.
10. THE ANCHOR RODS SHALL BE THREADED A MINIMUM OF 6 INCHES (150 mm) WITH A MINIMUM OF 3 INCHES (75 mm) OF THREADED ANCHOR ROD EMBEDDED IN THE FOUNDATION.
11. ANCHOR RODS SHALL PROJECT 2 3/4" (69.9 mm) ABOVE THE TOP OF THE FOUNDATION. IF BREAKAWAY COUPLINGS ARE SPECIFIED, THE CONTRACTOR SHALL CAREFULLY COORDINATE THE ANCHOR ROD PROJECTION WITH THE INSTALLATION REQUIREMENTS OF THE BREAKAWAY COUPLINGS.
12. THE CONTRACTOR SHALL USE A #3 SPIRAL AT 6" (152.4 mm) PITCH OR MAY SUBSTITUTE #3 TIES AT 12" (304.8 mm) O.C. WITH THE APPROVAL OF THE ENGINEER.
13. THE CABLE TRENCHES AND FOUNDATION SHALL BE BACK FILLED AND COMPACTED AS SPECIFIED BEFORE THE LIGHT POLE IS ERECTED.
14. THE RACEWAYS SHALL PROJECT 1" (25.4 mm) ABOVE THE TOP OF THE FOUNDATION.

LIGHT POLE FOUNDATION
40' (12.192 m) TO 47 1/2' (14.478 m) M.H. 15" (381 mm) BOLT CIRCLE

PEN TABLE = Rockford_Lighting.tbl
PLOT DRIVER = pdf/NOLAYERS/wplot.cfg

DIRECTORY = L:\PROJECTS\D1\D20\D20-N\Rockford\Lighting\Dwg\CAD_Sheets\Electrical\
USER NAME = Casey Hall

CMT	FILE NAME = D205006-LIGHT19.dgn	DESIGNED - CPT	REVISED -	STATE OF ILLINOIS DEPARTMENT OF TRANSPORTATION	ROADWAY LIGHTING DETAIL LIGHT POLE FOUNDATION ~~(BE-301)~~
	MODEL NAME = Default	DRAWN - JWD	REVISED -		
	PLOT SCALE = 40.0000 ' / in.	CHECKED - AB	REVISED -		
Licence No. 184-000513	PLOT DATE = 3/10/2015 = 8:16:32 AM	DATE - 1/9/2015	REVISED -		SCALE: N/A · SHEET 19 OF 24 SHEETS · STA. N/A TO STA. N/A

F.A.P. RTE.	SECTION	COUNTY	TOTAL SHEETS	SHEET NO.
734	78R-2	WINNEBAGO	926	530
		CONTRACT NO. 64C21		
		ILLINOIS FED. AID PROJECT		

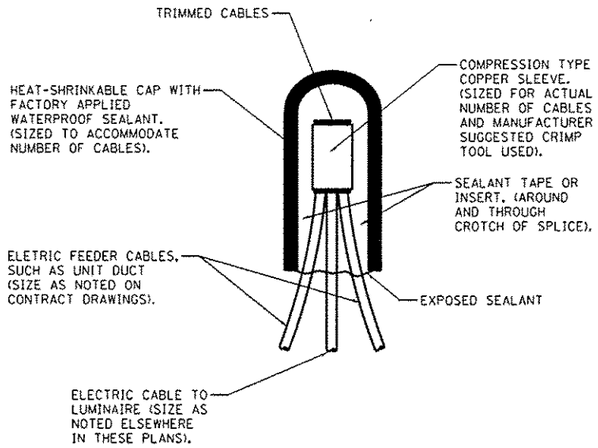

NOTES:

1. ALL TAPED SPLICES SHALL USE 2 LAYERS OF ELECTRICAL TAPE OVER 3 LAYERS OF RUBBER TAPE AS REQUIRED BY THE STANDARD SPECIFICATION. COAT THE FINISH TAPED SPLICE WITH BONDING COMPOUND.
2. ALL CABLE SPLICES SHALL BE TAPED UNLESS ANOTHER METHOD HAS BEEN SPECIFICALLY APPROVED BY THE ENGINEER.
3. THE NUMBER OF CABLES IN SPLICE MAY VARY

TYPICAL SPLICE DETAIL

N.T.S.

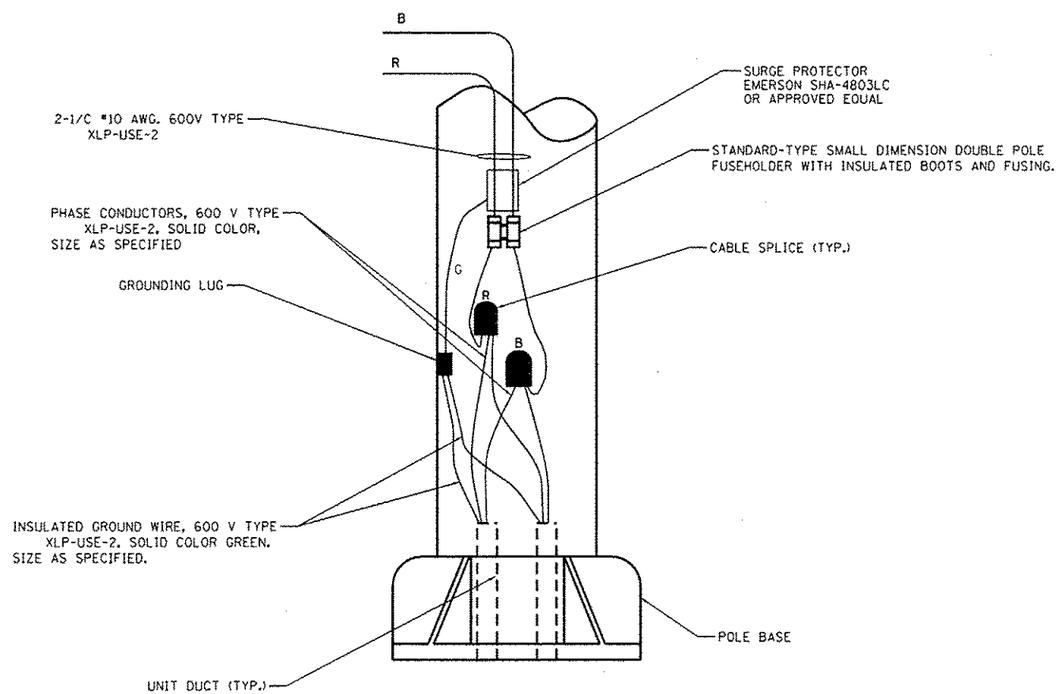

POLE WIRING DETAIL

N.T.S.

CMT License No. 184-000613	FILE NAME = 0205096 LIGHT20.dgn	DESIGNED - CPT	REVISED -	STATE OF ILLINOIS DEPARTMENT OF TRANSPORTATION	ROADWAY LIGHTING DETAIL TYPICAL SPLICE – POLE WIRING DETAIL ~~(BE-702)~~		F.A.P. RTE.	SECTION	COUNTY	TOTAL SHEETS	SHEET NO.
	MODEL NAME = Default	DRAWN - JWD	REVISED -				734	78R-2	WINNEBAGO	926	531
	PLOT SCALE = 40.0316 ' / in.	CHECKED - AB	REVISED -						CONTRACT NO. 64C21		
	PLOT DATE = 3/10/2015 - 8:16:44 AM	DATE - 1/9/2015	REVISED -		SCALE: N/A	SHEET 20 OF 24 SHEETS STA. N/A TO STA. N/A			ILLINOIS FED. AID PROJECT		

PEN TABLE = Rockford_Lighting.tbl
PLOT DRIVER = pdfMOLAYERS-v8.tcfg

DIRECTORY = L:\ROCKFORD\1320-02_N_Main\Lighting\Dgns\CAD_Sheets\Electrical\
USER NAME = Carey Cole

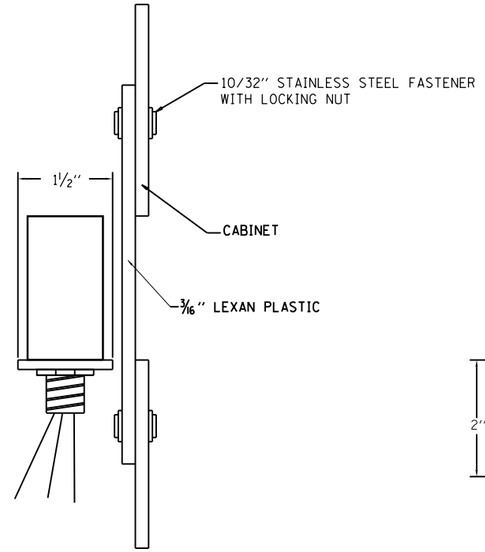

SIDE VIEW

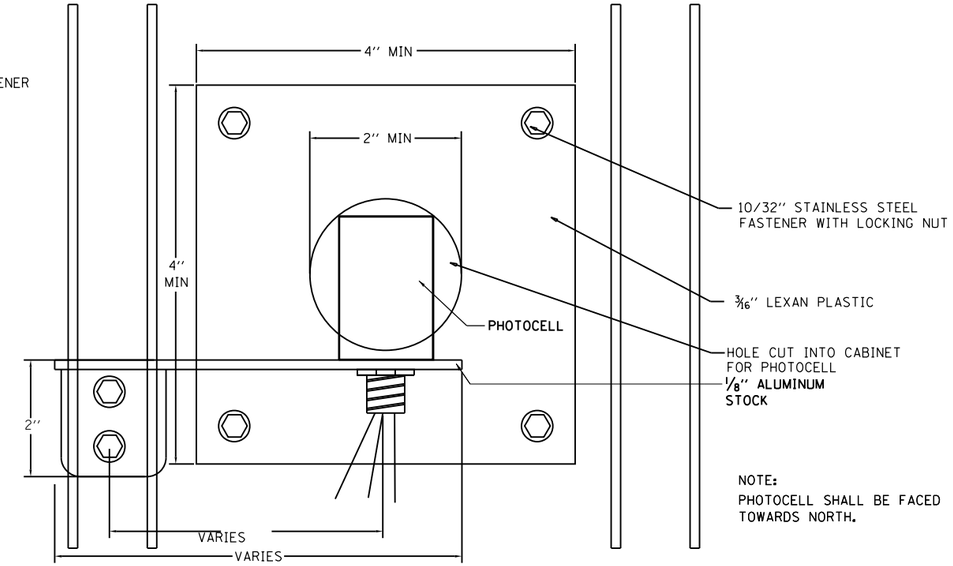

NOTE:
PHOTOCELL SHALL BE FACED
TOWARDS NORTH.

FRONT VIEW

PHOTOCELL MOUNTING DETAIL

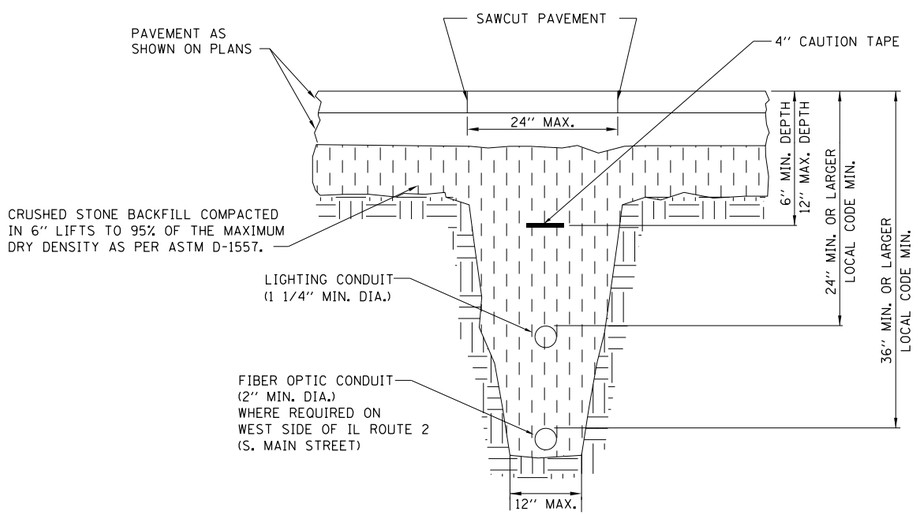

FIBER OPTICS AND STREET LIGHTING CONDUIT TRENCH

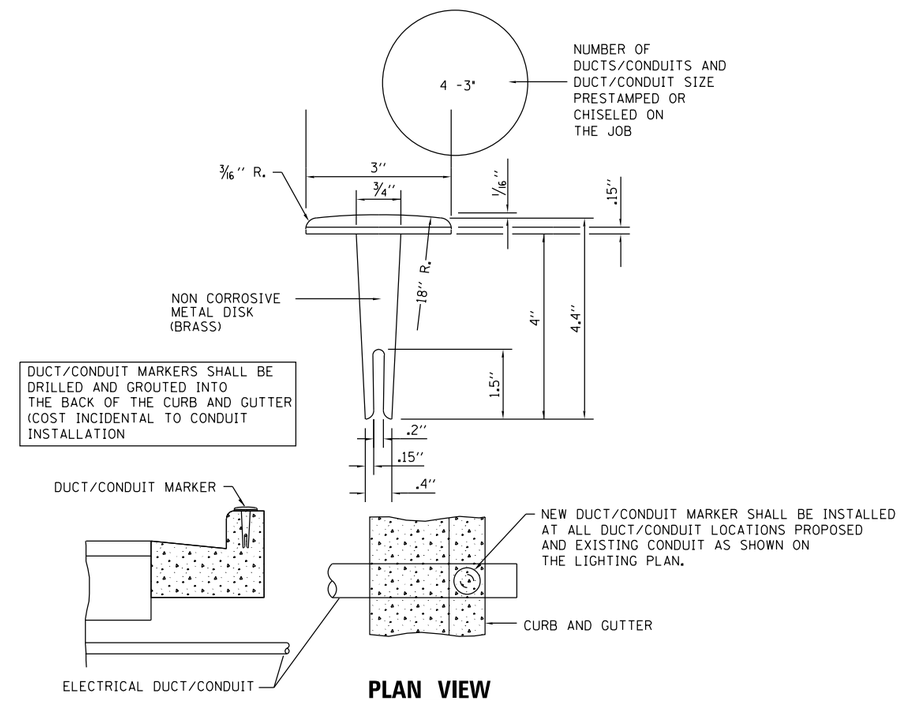

DUCT/CONDUIT MARKERS SHALL BE DRILLED AND GROUTED INTO THE BACK OF THE CURB AND GUTTER (COST INCIDENTAL TO CONDUIT INSTALLATION

PLAN VIEW

DUCT MARKER DETAIL

NOT TO SCALE

PEN TABLE = RockfordLightung.tbl
PLOT DRIVER = pdfNULAYERSbw.pltcfg

DIRECTORY = L:\ROCKFORD\1326\042_N.MainSt.Lighting\Drawn\CADD_Sheets\Electrical\
USER NAME = Casey Toth

CMT License No. 184-000613 © Copyright CMT, Inc.	FILE NAME = D206006-LIGHT21.dgn	DESIGNED - CPT	REVISED -	STATE OF ILLINOIS DEPARTMENT OF TRANSPORTATION	ROADWAY LIGHTING DETAIL
	MODEL NAME = Default	DRAWN - JWD	REVISED -		CONDUIT TRENCH – DUCT MARKER – PHOTOCELL MOUNTING
	PLOT SCALE = 40.0018 ' / in.	CHECKED - AB	REVISED -		
	PLOT DATE = 3/10/2015 - 8:16:45 AM	DATE - 1/9/2015	REVISED -		SCALE: N/A SHEET 21 OF 24 SHEETS STA. N/A TO STA. N/A

F.A.P. RTE.	SECTION	COUNTY	TOTAL SHEETS	SHEET NO.
734	78R-2	WINNEBAGO	926	532
		CONTRACT NO. 64C21		
		ILLINOIS FED. AID PROJECT		

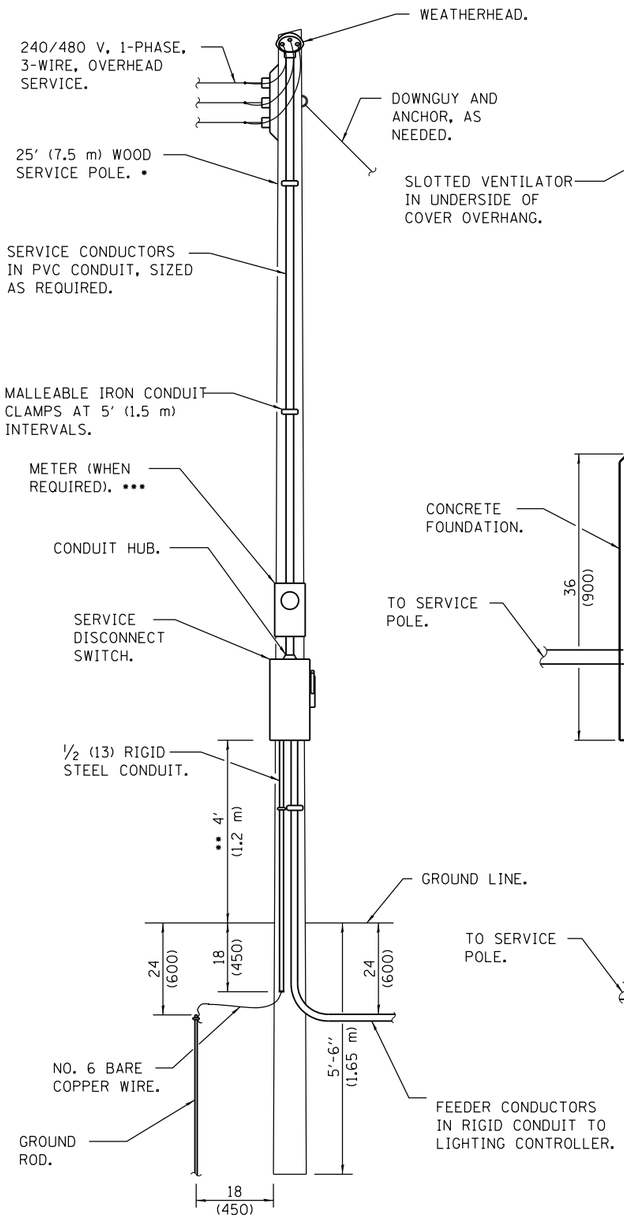

ELECTRIC SERVICE INSTALLATION

- • SIZE LARGER AS NEEDED.
- •• OR AS DIRECTED BY UTILITY COMPANY.
- ••• WHEN COLD SEQUENCING IS REQUIRED, PROVIDE A METER DISCONNECT SWITCH AS DIRECTED BY UTILITY COMPANY.

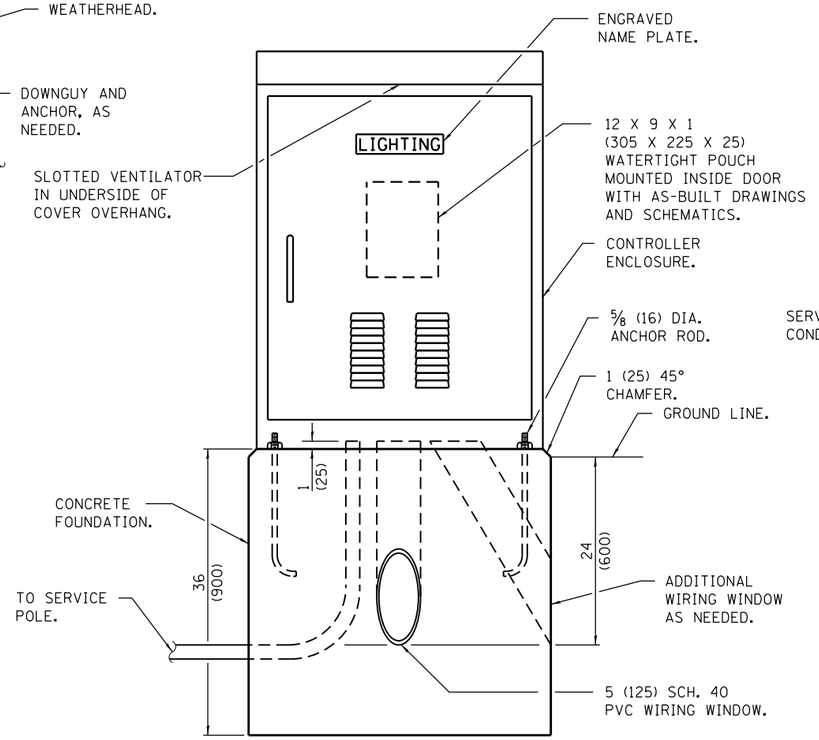

LIGHTING CONTROLLER

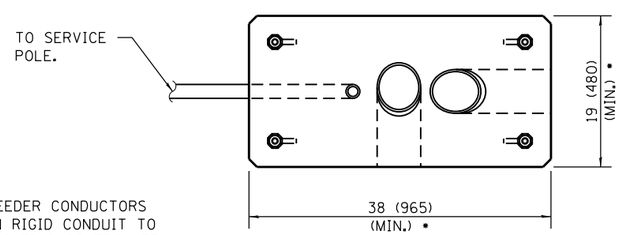

FOUNDATION (PLAN)

(WORK PAD NOT SHOWN.)

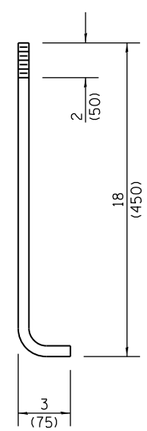

ANCHOR ROD DETAIL

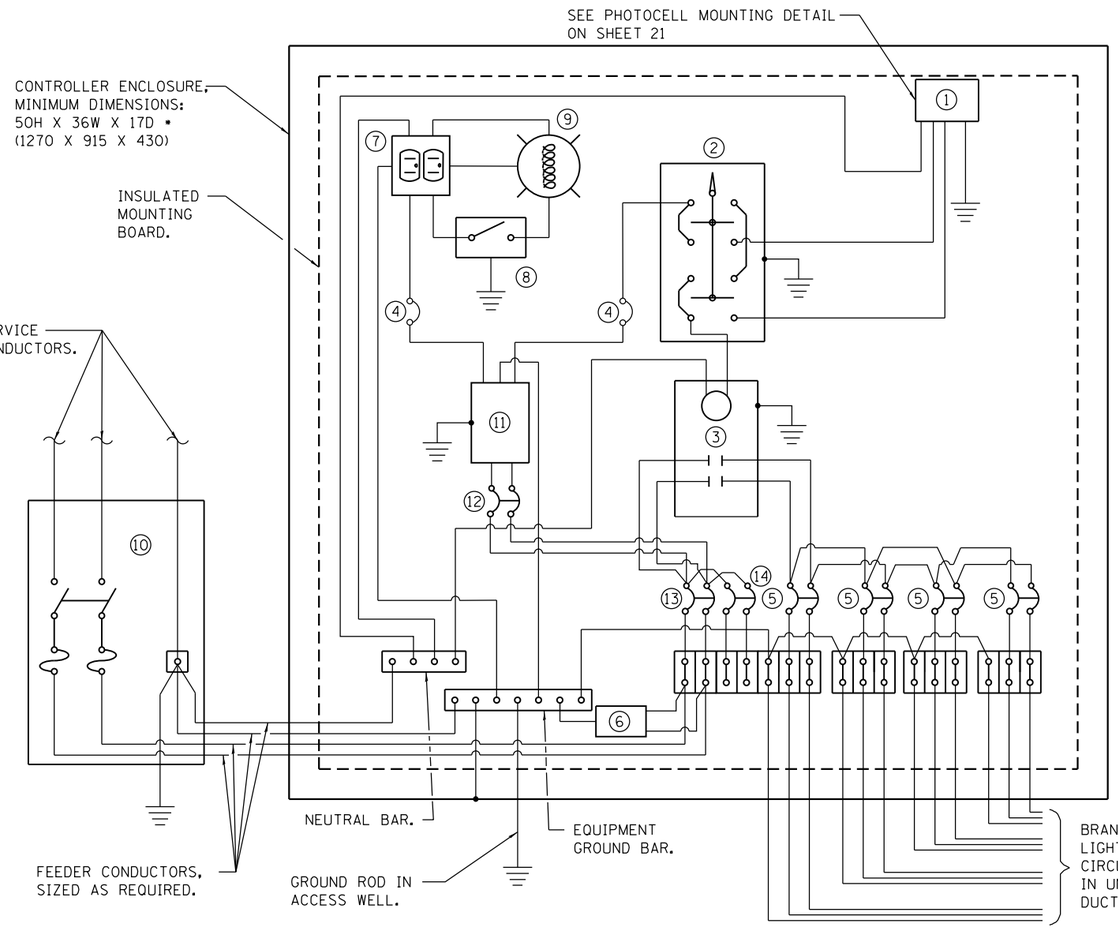

CONTROL SCHEMATIC

1. PHOTOCELL WITH INTEGRAL SURGE ARRESTER.
2. HAND-OFF-AUTO SELECTOR SWITCH.
3. 100 AMP•, ELECTRICALLY HELD CONTACTOR.
4. 15 AMP, 1-POLE CIRCUIT BREAKER.
5. 20 AMP•, 2-POLE CIRCUIT BREAKER (TWO SPARES REQUIRED BUT NOT SHOWN).
6. SURGE ARRESTOR.
7. GFCI DUPLEX RECEPTACLE.
8. SINGLE-POLE, SINGLE-THROW SWITCH.
9. INCANDESCENT LUMINAIRE, ENCLOSED AND GASKETTED WITH 100 WATT LAMP.
10. SERVICE DISCONNECT SWITCH - 2-POLE, 3-WIRE, 100 AMP•, FUSED AT 100 AMP•, SOLID NEUTRAL IN NEMA 4X ENCLOSURE HAVING LOCKABLE EXTERNAL HANDLE.
11. TRANSFORMER - 1KVA•, 480V PRIMARY, 120/240V SECONDARY, SINGLE-PHASE, 60HZ.
12. 15 AMP, 2-POLE CIRCUIT BREAKER.
13. 100 AMP•, 2-POLE CIRCUIT BREAKER.
14. 30 AMP, 2-POLE CIRCUIT BREAKER

• SIZE LARGER AS NEEDED.

ALL DIMENSIONS ARE IN INCHES (MILLIMETERS) UNLESS OTHERWISE SHOWN.

LIGHTING CONTROLLER BASE MOUNTED, 480V

CMT License No. 184-000613 ©Copyright CMT, Inc.	FILE NAME = D206006-LIGHT22.dgn	DESIGNED - CPT	REVISED -
	MODEL NAME = Default	DRAWN - JWD	REVISED -
	PLOT SCALE = 40.0018 ' / in.	CHECKED - AB	REVISED -
	PLOT DATE = 3/10/2015 - 8:16:46 AM	DATE - 1/9/2015	REVISED -

STATE OF ILLINOIS
DEPARTMENT OF TRANSPORTATION

ROADWAY LIGHTING DETAIL
LIGHTING CONTROLLER BASE MOUNTED

SCALE: N/A | SHEET 22 OF 24 SHEETS | STA. N/A TO STA. N/A

F.A.P. RTE.	SECTION	COUNTY	TOTAL SHEETS	SHEET NO.
734	78R-2	WINNEBAGO	926	533

CONTRACT NO. 64C21

ILLINOIS FED. AID PROJECT

PEN TABLE = RockfordLightingtbl
PLOT DRIVER = pdfNULAYERSbw.pltcfg

DIRECTORY = L:\ROCKFORD\1328042_N.Main\SLighting\Dmw\CADD_Sheets\Electrical\...
USER NAME = Casey Tobin

ROADWAY LIGHTING CONTROLLER "C1" ONE-LINE

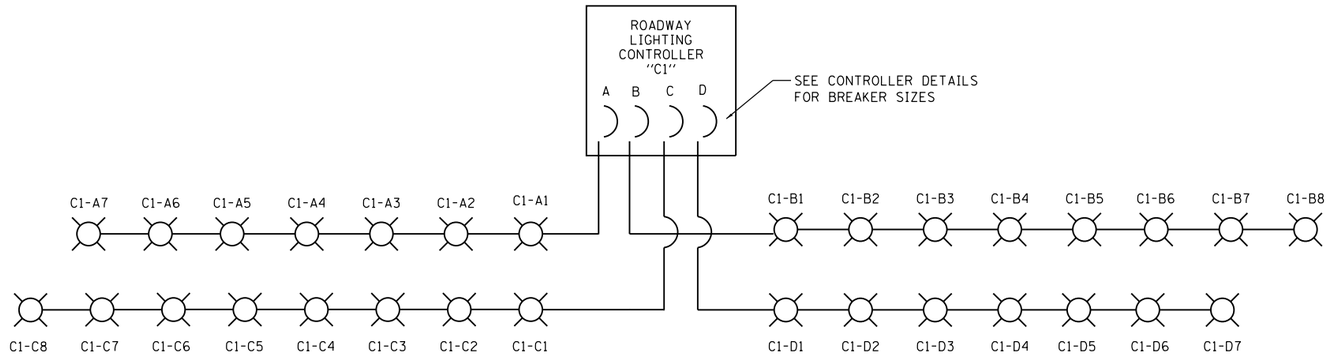

CONTROLLER "C1" LOAD SCHEDULE		
CIRCUIT #	AMPERES	WATTAGE
A	5.8	2800
B	6.6	3200
C	6.6	3200
D	5.8	2800

ROADWAY LIGHTING CONTROLLER "C2" ONE-LINE

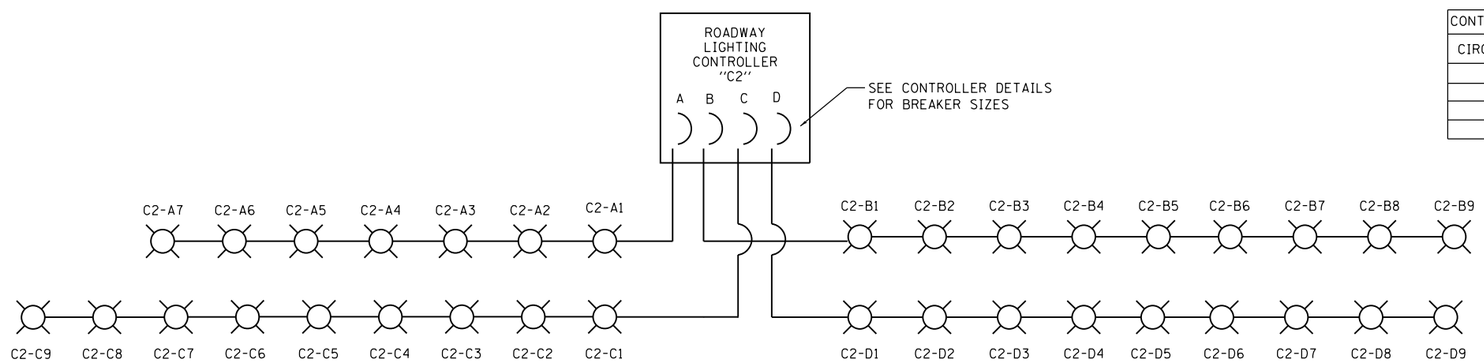

CONTROLLER "C2" LOAD SCHEDULE		
CIRCUIT #	AMPERES	WATTAGE
A	5.8	2800
B	7.5	3600
C	7.5	3600
D	7.5	3600

LEGEND

METAL HALIDE LUMINAIRE
400 WATT

NOTE:

1. NEUTRAL AND GROUND ARE NOT SHOWN BUT ARE REQUIRED FOR ALL CIRCUITS.
2. SEE SHEET 22 FOR ROADWAY LIGHTING CONTROLLER DETAIL.

PEN TABLE = RockfordLightng.tbl
PLOT DRIVER = pdfNOLAYERSbw.pltcfg
DIRECTORY = L:\ROCKFORD\13280-02_N.Main St\Lighting\Dwg\C\0D_Sheets\Electrical\...
USER NAME = Campbell Robin

MODEL NAME = D806006-LIGHT23.dgn	DESIGNED - CPT	REVISED -	
MODEL NAME = D806006-LIGHT23.dgn	DRAWN - CPT	REVISED -	
PLOT SCALE = 40.0000 ' / in.	CHECKED - AB	REVISED -	
PLOT DATE = 3/10/2015 - 8:16:46 AM	DATE - 1/9/2015	REVISED -	

CMT
License No. 184-000613
© Copyright CMT, Inc.

STATE OF ILLINOIS
DEPARTMENT OF TRANSPORTATION

ROADWAY LIGHTING DETAIL
LIGHTING CONTROLLER "C1" & "C2" ONE-LINE

SCALE: N/A | SHEET 23 OF 24 SHEETS | STA. TO STA.

F.A.P. RTE.	SECTION	COUNTY	TOTAL SHEETS	SHEET NO.
734	78R-2	WINNEBAGO	926	534

CONTRACT NO. 64C21

ILLINOIS FED. AID PROJECT

ROADWAY LIGHTING CONTROLLER "C3" ONE-LINE

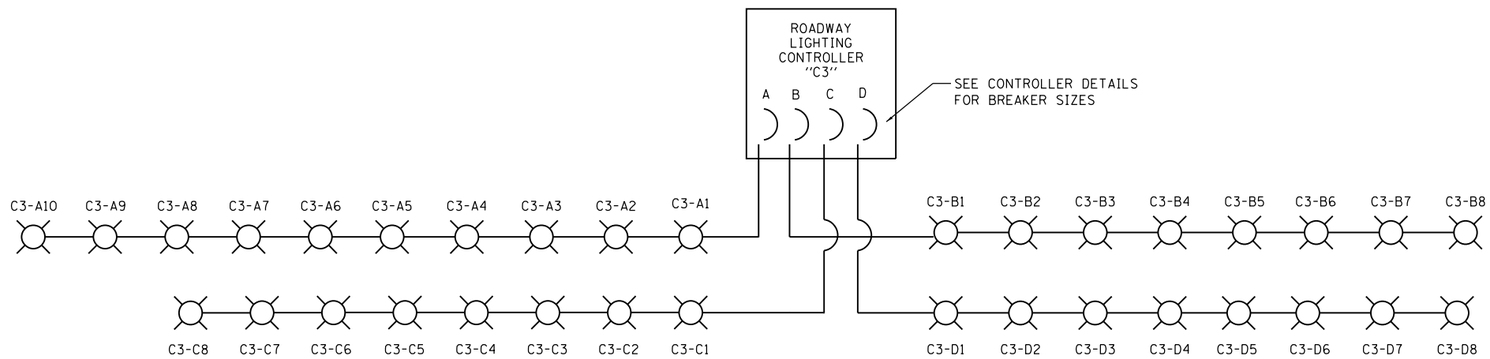

CONTROLLER "C3" LOAD SCHEDULE		
CIRCUIT #	AMPERES	WATTAGE
A	8.3	4000
B	6.6	3200
C	6.6	3200
D	6.6	3200

ROADWAY LIGHTING CONTROLLER "C4" ONE-LINE

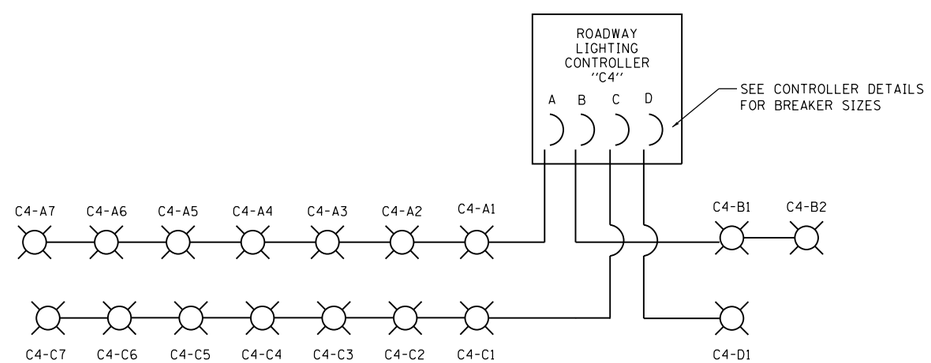

CONTROLLER "C4" LOAD SCHEDULE		
CIRCUIT #	AMPERES	WATTAGE
A	5.8	2800
B	1.6	800
C	5.8	2800
D	0.8	400

LEGEND

METAL HALIDE LUMINAIRE
400 WATT

NOTE:

1. NEUTRAL AND GROUND ARE NOT SHOWN BUT ARE REQUIRED FOR ALL CIRCUITS.
2. SEE SHEET 22 FOR ROADWAY LIGHTING CONTROLLER DETAIL.

PEN TABLE = RockfordLightng.tbl
PLOT DRIVER = pdfNOLAYERSbw.pltcfg
DIRECTORY = L:\ROCKFORD\13280-02_N.Main St\Lighting\Dwg\CADD_Sheets\Electrical\...
USER NAME = Campbell Robin

CMT License No. 184-000613 © Copyright CMT, Inc.	MODEL NAME = D806006-LIGHT24.dgn	DESIGNED - CPT	REVISED -
	MODEL NAME = D806006-LIGHT24.dgn	DRAWN - CPT	REVISED -
	PLOT SCALE = 40.0000 ' / in.	CHECKED - AB	REVISED -
	PLOT DATE = 3/10/2015 - 8:16:47 AM	DATE - 1/9/2015	REVISED -

STATE OF ILLINOIS
DEPARTMENT OF TRANSPORTATION

ROADWAY LIGHTING DETAIL
LIGHTING CONTROLLER "C3" & "C4" ONE-LINE

SCALE: N/A | SHEET 24 OF 24 SHEETS | STA. TO STA.

F.A.P. RTE.	SECTION	COUNTY	TOTAL SHEETS	SHEET NO.
734	78R-2	WINNEBAGO	926	535

CONTRACT NO. 64C21

ILLINOIS FED. AID PROJECT

20200200	ROCK EXCAVATION	
CU YD	LOCATION	COMMENTS
120	VARIES	USED AS NEEDED
120	TOTAL	

X0322464	ABANDON & FILL EXISTING SANITARY MANHOLE			
EACH	STRUCUTRE I.D.	ROADWAY	STATION	OFFSET
1	071-008	IL Route 2	541+96	4' LT
1	071-009	IL Route 2	546+71	4' LT
1	071-010	IL Route 2	550+82	3' LT
1	071-011	IL Route 2	554+18	2' RT
1	071-031	IL Route 2	566+69	53' LT
1	089-110	Halsted Rd.	338+76	14' RT
6	TOTAL			

X0323760	SANITARY SEWER SERVICE, 6" PVC, COMPLETE				
EACH	ROADWAY	STATION	OFFSET		ADDRESS
1	IL Route 2	535+25	4'	LT	1706
1	IL Route 2	537+63	5'	RT	1810
1	IL Route 2	538+17	5'	RT	1814
1	IL Route 2	542+16	4'	RT	1904
1	IL Route 2	544+24	4'	RT	1920
1	IL Route 2	547+73	5'	RT	2010
1	IL Route 2	551+59	5'	RT	2106
1	IL Route 2	552+17	5'	RT	N/A
1	IL Route 2	552+74	5'	RT	N/A
1	IL Route 2	552+98	5'	RT	N/A
1	IL Route 2	553+68	5'	RT	2126
1	Custer Ave.	99+07	2'	LT	2104
1	IL Route 2	559+55	20'	RT	2308
1	IL Route 2	560+04	20'	RT	2312
1	IL Route 2	560+51	18'	RT	2314
1	IL Route 2	560+97	16'	RT	2320
1	IL Route 2	561+25	14'	RT	2328
1	IL Route 2	564+62	30'	LT	2501
1	IL Route 2	566+21	38'	LT	2430
1	IL Route 2	566+63	44'	LT	2500
1	IL Route 2	569+10	27'	LT	2516
1	IL Route 2	570+99	23'	LT	2520
1	IL Route 2	578+90	41'	RT	2725
1	Pierce Ave.	279+34	0'	RT	3102
1	Deborah Ave.	318+94	0'	RT	3304
1	Van Wie Ave.	158+90	0'	RT	2218
1	Fulton Ave.	181+79	0'	RT	1015
1	Fulton Ave.	181+87	0'	RT	1020
1	Willoughby Ave.	212+03	1'	RT	2501
1	Halsted Rd.	338+12	14'	RT	3338
1	Halsted Rd.	341+80	0'	RT	3325
31	TOTAL				

X0322791	FILL EXISTING SANITARY SEWERS								
		UPSTREAM LOCATION			DOWNSTREAM LOCATION				
CU YD	ROADWAY	STATION	OFFSET		STATION	OFFSET		UPSTREAM MH	DOWNSTREAM MH
12.5	IL Route 2	541+97	4'	LT	536+65	4'	LT	071-008	071-006
11.0	IL Route 2	546+71	3'	LT	541+97	4'	LT	071-009	071-008
10.0	IL Route 2	550+87	3'	LT	546+71	3'	LT	071-010	071-009
8.0	IL Route 2	554+18	2'	RT	550+87	3'	LT	071-011	071-010
0.5	IL Route 2	566+69	53'	LT	566+58	46'	LT	071-031	071-153
3.5	IL Route 2	568+15	39'	LT	566+69	53'	LT	071-149	071-031
45.5	TOTAL								

#2000297	SANITARY SEWER MAINLINE REPAIR, 8"						
		UPSTREAM LOCATION			DOWNSTREAM LOCATION		
FOOT	ROADWAY	STATION	OFFSET		STATION	OFFSET	
9	Halsted Rd.	338+21	14'	RT	338+12	14'	RT
9	TOTAL						

X0327549	SANITARY SEWER MAINLINE REPAIR, 10"						
		UPSTREAM LOCATION			DOWNSTREAM LOCATION		
FOOT	ROADWAY	STATION	OFFSET		STATION	OFFSET	
18	IL Route 2	542+16	4'	RT	541+98	4'	RT
6	IL Route 2	563+84	21'	LT	563+77	20'	LT
10	IL Route 2	561+98	5'	LT	561+87	7'	LT
27	IL Route 2	575+02	46'	LT	575+29	46	LT
9	IL Route 2	587+98	29'	RT	587+98	38'	RT
70	TOTAL						

X0327550	SANITARY SEWER MAINLINE REPAIR, 12"						
		UPSTREAM LOCATION			DOWNSTREAM LOCATION		
FOOT	ROADWAY	STATION	OFFSET		STATION	OFFSET	
6	IL Route 2	578+79	22'	RT	578+79	28'	RT
6	TOTAL						

X0327551	SANITARY SEWER MAINLINE REPAIR, 15"						
		UPSTREAM LOCATION			DOWNSTREAM LOCATION		
FOOT	ROADWAY	STATION	OFFSET		STATION	OFFSET	
15	IL Route 2	587+98	40'	RT	587+83	40'	RT
10	IL Route 2	588+11	40'	RT	588+01	40'	RT
25	TOTAL						

X6026050	SANITARY MANHOLES TO BE ADJUSTED				
EACH	STRUCUTRE I.D.	ROADWAY	STATION	OFFSET	
1	071-004	IL Route 2	534+41	6'	LT
1	081-005	IL Route 2	575+32	40'	RT
1	081-141	IL Route 2	581+68	39'	RT
1	081-117	IL Route 2	619+75	56'	RT
1	081-110	Belmont Blvd.	361+80	0'	RT
5	TOTAL				

X6026051	SANITARY MANHOLES TO BE RECONSTRUCTED				
EACH	STRUCUTRE I.D.	ROADWAY	STATION	OFFSET	
1	071-030	IL Route 2	565+94	25'	LT
1	071-153	IL Route 2	566+58	46'	LT
1	071-149	Ford Ave.	199+88	2'	RT
1	071-150	IL Route 2	568+09	25'	RT
1	081-004	IL Route 2	578+79	41'	RT
1	081-143	IL Route 2	584+90	39'	RT
1	081-001	IL Route 2	585+15	39'	RT
1	081-144	IL Route 2	585+14	59'	RT
1	081-013	IL Route 2	587+98	40'	RT
1	081-059	IL Route 2	590+81	41'	RT
1	081-044	IL Route 2	592+55	46'	RT
1	081-045	IL Route 2	593+68	48'	RT
1	071-176	Ford Ave.	198+13	0'	RT
1	089-004	Belmont Blvd.	358+14	0'	RT
1	089-028	Riverside Blvd.	718+78	81'	RT
15	TOTAL				

X6026054	SANITARY MANHOLES TO BE REMOVED				
EACH	STRUCUTRE I.D.	ROADWAY	STATION	OFFSET	
1	071-006	IL Route 2	536+64	4'	LT
1	071-012	IL Route 2	536+35	5'	RT
1	071-013	IL Route 2	542+09	4'	RT
1	071-014	IL Route 2	546+60	5'	RT
1	PRIVATE	IL Route 2	547+76	20'	LT
1	071-015	IL Route 2	551+00	5'	RT
1	071-017	IL Route 2	554+13	8'	RT
1	071-018	IL Route 2	554+84	15'	RT
1	071-151	IL Route 2	556+86	3'	RT
1	071-024	IL Route 2	558+38	18'	RT
1	071-029	IL Route 2	561+90	7'	RT
1	PRIVATE	IL Route 2	569+10	36'	LT
1	PRIVATE	Fulton Ave.	181+92	22'	RT
1	071-036	IL Route 2	571+07	23'	LT
1	081-009	Eddy Ave.	239+58	3'	RT
1	081-008	IL Route 2	577+19	41'	LT
1	081-002	IL Route 2	578+79	42'	LT
1	081-058	Deborah Ave.	318+94	0'	RT
1	081-046	Pierce Ave.	279+43	0'	RT
1	089-104	Halsted Rd.	341+81	0'	RT
1	089-002	Halsted Rd.	338+22	14'	RT
21	TOTAL				

X6026055	SANITARY MANHOLE, SPECIAL					
EACH	STRUCUTRE I.D.	ROADWAY	STATION	OFFSET		DIA.
1	071-006	IL Route 2	536+64	4'	LT	4'
1	071-012	IL Route 2	536+75	5'	RT	4'
1	071-013	IL Route 2	542+03	4'	RT	4'
1	071-014	IL Route 2	546+60	5'	RT	4'
1	071-015	IL Route 2	551+00	5'	RT	4'
1	071-017	IL Route 2	554+13	8'	RT	4'
1	071-018	IL Route 2	554+84	15'	RT	4'
1	071-151	IL Route 2	556+86	3'	RT	4'
1	071-024	IL Route 2	558+38	18'	RT	4'
1	071-029	IL Route 2	562+37	4'	RT	4'
1	071-036	IL Route 2	571+07	23'	LT	4'
1	081-008	IL Route 2	577+19	41'	LT	4'
1	081-002	IL Route 2	578+79	42'	LT	4'
1	MH #1	Fulton Ave.	180+53	1'	LT	4'
1	MH #2	Fulton Ave.	181+94	0'	RT	4'
1	081-058	Deborah Ave.	319+07	0'	RT	4'
1	089-104	Halsted Rd.	341+68	0'	RT	4'
1	089-002	Halsted Rd.	338+22	14'	RT	4'
1	081-009	Eddy Ave.	239+58	3'	RT	4'
1	081-046	Pierce Ave.	279+43	0'	RT	4'
20	TOTAL					

Z0056900	SANITARY SEWER, 8"								
		UPSTREAM LOCATION			DOWNSTREAM LOCATION				
FOOT	ROADWAY	STATION	OFFSET		STATION	OFFSET		UPSTREAM MH	DOWNSTREAM MH
48	Fulton Ave.	180+53	1'	LT	180+05	5'	LT	#1	071-029
140	Fulton Ave.	181+94	0'	RT	180+53	1'	LT	#2	#1
188	TOTAL								

Z0057000	SANITARY SEWER, 10"								
		UPSTREAM LOCATION			DOWNSTREAM LOCATION				
FOOT	ROADWAY	STATION	OFFSET		STATION	OFFSET		UPSTREAM MH	DOWNSTREAM MH
14	IL Route 2	536+76	5'	RT	536+65	4'	LT	071-012	071-006
135	IL Route 2	594+53	56'	LT	593+68	48'	RT	081-046	081-045
149	TOTAL								

XX007506	SANITARY SERVICE CLEANOUT				
EACH	ROADWAY	STATION	OFFSET		ADDRESS
1	IL Route 2	535+08	37'	RT	N/A
1	Wagner Ave.	58+92	23'	LT	1305
1	Wagner Ave.	59+39	23'	LT	N/A
1	IL Route 2	554+56	45'	RT	N/A
1	IL Route 2	555+57	43'	RT	2201
1	IL Route 2	560+97	51'	RT	2327
1	IL Route 2	561+38	45'	RT	2327
1	IL Route 2	563+48	58'	LT	2412
1	IL Route 2	563+62	58'	LT	2422
1	IL Route 2	565+23	67'	LT	2430
10	TOTAL				

Z0062456	TEMPORARY PAVEMENT		
AREA (SY)	ROADWAY	FROM STA.	TO STA.
25	IL Route 2	537+54	537+69
25	IL Route 2	538+06	538+21
67	IL Route 2	541+83	542+23
25	IL Route 2	544+16	544+31
25	IL Route 2	547+65	547+80
25	IL Route 2	551+51	551+66
192	TOTAL		

SANITARY SEWER GENERAL NOTES

1. THE CONTRACTOR IS SOLELY RESPONSIBLE FOR EXECUTION OF WORK TO THE LINES AND GRADES SHOWN ON THESE PLANS. CONSTRUCTION SHALL NOT VARY FROM PLANS WITHOUT DISTRICT APPROVAL.

2. THE ROCK RIVER WATER RECLAMATION DISTRICT (RRWRD), MUNICIPALITIES, PERTINENT ROADWAY AUTHORITIES, AND ALL AFFECTED PROPERTY OWNERS SHALL BE NOTIFIED AT LEAST 48 HOURS BEFORE STARTING CONSTRUCTION.

3. ALL PIPE, FITTINGS, PRECAST MANHOLE STRUCTURES, FRAMES AND LIDS, AND PIPE INSTALLATION PERTAINING TO THE SANITARY SEWER IMPROVEMENTS SHALL CONFORM TO THE FOLLOWING SPECIFICATIONS: STANDARD SPECIFICATIONS FOR WATER AND SEWER MAIN CONSTRUCTION IN ILLINOIS, CURRENT EDITION, DIVISION IV, SECTIONS 41–2.01 A THROUGH C, PROTECTION OF WATER MAINS, AND ROCK RIVER WATER RECLAMATION DISTRICT'S GENERAL PROVISIONS AND TECHNICAL SPECIFICATIONS FOR SANITARY SEWER CONSTRUCTION.

4. THE CONTRACTOR SHALL BE RESPONSIBLE FOR ALL TESTS OF MATERIALS AND FINAL INSTALLATION REQUIRED BY THE ROCK RIVER WATER RECLAMATION DISTRICT. ALL DEFICIENCIES NOTED BY THE INSPECTORS SHALL BE CORRECTED BY THE CONTRACTOR WITHOUT COST TO THE DISTRICT AND PRIOR TO FINAL PAYMENT.

5. ALL WORK WITHIN STREETS, ROADS, ALLEYS, HIGHWAYS, RAILROAD RIGHTS–OF–WAY OR FLOOD PLAINS SHALL BE SUBJECT TO THE REGULATIONS AND REQUIREMENTS OF THE CONTRACT DOCUMENTS FOR THE IL ROUTE 2 (N. MAIN STREET) PROJECT. SHOULD CONFLICTS OR CONTRADICTIONS ARISE BETWEEN THE PLANS, SPECIFICATIONS AND THE ROADWAY, RAILROAD OR WATERWAY PERMITS, THE PERMITS SHALL GOVERN.

6. FINAL INSPECTION, TESTING AND ACCEPTANCE TESTS FOR THE SANITARY SEWER AND SANITARY MANHOLES SHALL BE IN ACCORDANCE WITH GENERAL PROVISIONS AND TECHNICAL SPECIFICATIONS FOR SANITARY SEWER CONSTRUCTION AND THE REQUIREMENTS OF THE ROCK RIVER WATER RECLAMATION DISTRICT. LOW PRESSURE AIR TESTING SHALL BE PERFORMED ON ALL NEW SANITARY SEWER LINES, AND SHALL USE AN ALLOWABLE PRESSURE DROP OF 0.5 PSIG. ALL FLEXIBLE SEWER PIPE SHALL BE DEFLECTION TESTED. DEFLECTION SHALL NOT EXCEED 5% OF BASE I.D. INDICATED IN THE APPLICABLE ASTM STANDARD. THE FINAL DEFLECTION TEST SHALL NOT BE MADE UNTIL ALL THE BACKFILL HAS BEEN IN PLACE FOR A MINIMUM OF THIRTY (30) DAYS. LOW PRESSURE AIR TESTING OF SEWER MAIN WITH LIVE SERVICE CONNECTIONS AND SANITARY SEWER MAIN LINE REPAIR WILL NOT BE REQUIRED. LIVE SEWERS AND MAIN LINE REPAIRS SHALL BE TELEVISED BY RRWRD FOR FINAL ACCEPTANCE.

7. ALL NEW SANITARY SEWER MANHOLES SHALL BE VACUUM TESTED PER ASTM C–1244 7/32 STANDARD TEST METHOD FOR CONCRETE SEWER MANHOLES BY THE NEGATIVE PRESSURE TEST PRIOR TO ACCEPTANCE.

8. THE CONTRACTOR SHALL NOTIFY ALL UTILITY COMPANIES PRIOR TO BEGINNING ANY WORK. ALL UNDERGROUND UTILITIES (INCLUDING STORM SEWER) SHALL BE LOCATED BY THE UTILITY INVOLVED AND SPECIAL CARE SHALL BE TAKEN WHEN EXCAVATING NEAR UNDERGROUND UTILITIES TO AVOID DAMAGE. IN THE EVENT THAT THE WORK REQUIRES EXCAVATION AND INSTALLATION OF SANITARY SEWER UNDER AN EXISTING UTILITY, PROPER BRACING AND PROTECTION SHALL BE USED. THE CONTRACTOR SHALL BE RESPONSIBLE FOR COORDINATING ALL SANITARY SEWER WORK WITH THE STORM SEWER REMOVAL, STORM SEWER INSTALLATION, UTILITY RELOCATION, LIGHT POLE INSTALLATION, AND ALL OTHER WORK INCLUDED IN THE IL ROUTE 2 (N. MAIN STREET) IMPROVEMENT PROJECT. FORTY–EIGHT (48) HOURS PRIOR TO STARTING CONSTRUCTION, THE CONTRACTOR SHALL CALL J.U.L.I.E. AT 1–800–892–0123 FOR UTILITY LOCATION AT SITE. THE CONTRACTOR SHALL ALSO BE RESPONSIBLE FOR NOTIFYING ALL UTILITIES NOT ON THE J.U.L.I.E. NETWORK.

9. CONTRACTOR SHALL MAINTAIN AT ALL TIMES DURING CONSTRUCTION A PERSON COMPETENT IN COMPLIANCE WITH OSHA TRENCHING AND EXCAVATION REQUIREMENTS. THE COMPETENT PERSON SHALL BE ONE WHO IS CAPABLE OF IDENTIFYING EXISTING AND PROBABLE HAZARDS IN THE SURROUNDINGS, OR WORKING CONDITIONS WHICH ARE UNSANITARY, HAZARDOUS OR DANGEROUS TO EMPLOYEES, AND WHO HAS AUTHORIZATION TO TAKE PROMPT CORRECTIVE MEASURES TO ELIMINATE THEM. THE METHODS AND MEANS TO COMPLY WITH CONSTRUCTION SITE SAFETY ARE THE SOLE RESPONSIBILITY OF THE CONTRACTOR. DISTRICT STAFF IS NOT RESPONSIBLE FOR CONTRACTOR'S COMPLIANCE PROCEDURES.

10. BEDDING, BACKFILL AND COMPACTION

PIPE BEDDING

PIPE BEDDING FOR PVC PIPE SHALL BE CLASS IA PER ASTM STANDARD D–2321. THE TRENCH BOTTOM SHALL BE BEDDED WITH SIX INCHES (6") (MINIMUM) CRUSHED STONE FOUNDATION. CRUSHED STONE SHALL BE PLACED TO A MINIMUM OF TWELVE INCHES (12") ABOVE THE TOP OF THE PIPE, PER THE BEDDING DETAIL.

BEDDING SHALL BE GRADED SUCH THAT IT PRECLUDES THE MIGRATION OF TRENCH WALL MATERIAL INTO THE BEDDING; THE DISTRICT SHALL APPROVE THIS BEDDING MATERIAL AFTER THE CHARACTERISTICS OF THE TRENCH ARE DETERMINED. IN THE EVENT THAT THE TRENCH BOTTOM IS UNSTABLE AS DETERMINED BY THE DISTRICT, THE CONTRACTOR SHALL UNDERCUT THE TRENCH AS REQUIRED AND FURNISH FOUNDATION MATERIAL AT NO ADDITIONAL COST TO THE DISTRICT. THE FOUNDATION MATERIAL SHALL BE A COARSE AGGREGATE MATERIAL OF A GRADATION DISTRIBUTION THAT WILL INHIBIT THE MIGRATION OF THE BEDDING MATERIAL, TRENCH BOTTOMS AND WALLS.

IN THE EVENT THE WATER TABLE IS ABOVE THE BOTTOM OF THE PIPE BEDDING, OR THE TRENCH BOTTOM IS UNSTABLE OR UNSUITABLE, A POROUS GRANULAR FOUNDATION MEETING IDOT SPECIFICATIONS OF CA5, CA3 OR "A" STONE SHALL BE INSTALLED AS NECESSARY BELOW THE GRANULAR BEDDING MATERIAL, EXTENDING TO THE LIMITS OF THE BEDDING DIAGRAM AT NO EXTRA COST TO THE DISTRICT. SHOULD BOULDERS, FROZEN MATERIAL, ETC., WHICH COULD DAMAGE THE PIPE BE PRESENT IN THE NATIVE BACKFILL MATERIAL, THE CONTRACTOR SHALL BRING THE BEDDING MATERIAL TO A POINT TWENTY–FOUR INCHES (24") ABOVE THE CROWN OF THE PIPE (COST INCIDENTAL). THE FOUNDATION MATERIAL SHALL INHIBIT THE MIGRATION OF THE BEDDING MATERIAL INTO THE FOUNDATION.

BACKFILL AND COMPACTION

THE CONTRACTOR SHALL USE APPROVED SELECT TRENCH BACKFILL TO THE LEVEL OF THE BASE UNDER ALL ROADS, ALLEYWAYS, SHOULDERS, SIDEWALKS, DRIVEWAYS, PARKING LOTS OR PAVEMENTS OF ANY KIND AND BEYOND SUCH PAVEMENTS AS SET FORTH IN GENERAL PROVISIONS AND TECHNICAL SPECIFICATIONS FOR SANITARY SEWER CONSTRUCTION T.S. 2:4–C. SELECT TRENCH BACKFILL UNDER SAID STRUCTURES SHALL BE F.A.6 MECHANICALLY COMPACTED IN SIX–INCH (6") TO EIGHTEEN–INCH (18") LOOSE LIFTS TO THE SUBGRADE ELEVATION OF THE ROAD, ALLEY, SHOULDER, SIDEWALK, DRIVEWAY, PARKING LOT OR PAVEMENT. THE MATERIALS AND COMPACTION SHALL BE IN ACCORDANCE WITH IDOT STANDARD SPECIFICATIONS FOR ROAD AND BRIDGE CONSTRUCTION (CURRENT EDITION), INCLUDING SECTION 208 AND 550.07, METHOD 1. ALL SELECT TRENCH BACKFILL SHALL BE COMPACTED TO NINETY–FIVE PERCENT (95%) OF PROCTOR DENSITY; ALL OTHER BACKFILL SHALL BE COMPACTED TO NINETY PERCENT (90%) (MINIMUM) OF PROCTOR DENSITY.

CONTRACTOR SHALL PROPERLY DISPOSE OF ALL SPOIL AT NO ADDITIONAL COST TO THE DISTRICT. THE CONTRACTOR SHALL EXERCISE CARE NOT TO DISTURB ANY EXISTING UTILITIES DURING BACKFILLING AND COMPACTION OPERATIONS.

THE CONTRACTOR SHALL FURNISH A BACKHOE AND OPERATOR DURING THE TESTING OF THE BACKFILL PLACED DURING CONSTRUCTION. ALL COMPACTION TESTS WILL BE PERFORMED AT THE CONTRACTOR'S EXPENSE BY AN APPROVED, INDEPENDENT GEOTECHNICAL TESTING FIRM. IF THE TESTS DO NOT MEET THE COMPACTION REQUIREMENT SPECIFIED ABOVE, THE AREA SHALL BE BOTH RECOMPACTED AND RETESTED AT THE CONTRACTOR'S EXPENSE UNTIL THE TEST REQUIREMENTS ARE MET.

FOR GRANULAR BACKFILL (F.A.6), A VIBRATORY PLATE, OR OTHER APPROVED EQUIPMENT–MOUNTED COMPACTION DEVICES MUST BE USED BY THE CONTRACTOR TO COMPACT THE BACKFILL. WATER–JETTING, PONDING OR FLOODING WILL NOT BE PERMITTED AS A MEANS OF TRENCH COMPACTION ON THIS PROJECT EXCEPT AROUND MANHOLES WHERE JETTING MAY BE USED.

IF INITIAL TESTS SHOW COMPACTION REQUIREMENTS ARE BEING MET, NO FURTHER LIFT TESTING WILL BE REQUIRED UNLESS METHOD, EQUIPMENT OR MATERIALS CHANGE. THE FINAL LIFT FORMING THE SUBGRADE MUST BE TESTED.

THE CONTRACTOR SHALL USE REASONABLE CARE WHILE BACKFILLING OVER THE SEWER. NO MATERIALS SUCH AS ROCKS OR BOULDERS, WHICH COULD DAMAGE THE PIPE, SHALL BE DROPPED DIRECTLY ON THE SEWER PIPE. IF THESE MATERIALS ARE PRESENT IN THE BACKFILL, THE CONTRACTOR SHALL BRING THE BEDDING MATERIAL TO A POINT 24" ABOVE THE CROWN OF THE PIPE BEFORE BACKFILLING. THE COST OF THIS ADDITIONAL GRANULAR MATERIAL SHALL BE CONSIDERED INCIDENTAL TO THE CONTRACT UNIT PRICE FOR THE SANITARY SEWER.

IN TRENCHES NOT REQUIRING SELECT TRENCH BACKFILL, NO EXCAVATED MATERIAL LARGER THAN EIGHT INCHES (8") IN ANY DIMENSION SHALL BE USED IN THE BACKFILL.

THE CONTRACTOR SHALL GUARANTEE AGAINST SETTLEMENT THROUGHOUT THIS PROJECT FOR A PERIOD OF THREE (3) YEARS AFTER FINAL ACCEPTANCE IS GRANTED BY THE DISTRICT AND THE ILLINOIS DEPARTMENT OF TRANSPORTATION (IDOT). ANY SETTLEMENT THAT OCCURS DURING THIS THREE–YEAR PERIOD SHALL BE REPAIRED AT THE CONTRACTOR'S EXPENSE.

PAYMENT FOR BEDDING, BACKFILL AND COMPACTION SHALL BE INCLUDED IN THE UNIT PRICE FOR ALL SANITARY SEWER RELATIED BID ITEMS, COMPLETE IN PLACE.

11. BYPASS PUMPING

THE CONTRACTOR SHALL PROVIDE BYPASS PUMPING AS REQUIRED AND SHALL BE TOTALLY RESPONSIBLE FOR PROVIDING ALL PUMPS, CONDUITS, PLUGS AND OTHER EQUIPMENT TO SAFELY DIVERT THE FLOW OF SEWAGE AS REQUIRED TO CONSTRUCT THE PROPOSED SANITARY SEWER, MANHOLES AND SANITARY SEWER SERVICES.

THE CONTRACTOR SHALL FURNISH THE NECESSARY LABOR AND SUPERVISION TO SET UP AND OPERATE THE BYPASS PUMPING SYSTEM. THE CONTRACTOR SHALL ONLY PUMP FLOW INTO OTHER SANITARY SEWER MANHOLES AS APPROVED BY THE DISTRICT. THE PUMPING SYSTEM SHALL HAVE SUFFICIENT CAPACITY TO HANDLE THE EXISTING FLOW PLUS ANY ADDITIONAL FLOW THAT MAY OCCUR DURING A RAINSTORM OR PEAK FLOW PERIODS. THE CONTRACTOR SHALL PROVIDE SUFFICIENT INSPECTION PERSONNEL TO ENSURE THAT SURCHARGING AND BACKUPS DO NOT OCCUR ON PUBLIC OR PRIVATE PROPERTY. IF PUMPING IS REQUIRED ON A 24–HOUR BASIS, THE EQUIPMENT SUPPLIED SHALL BE EQUIPPED TO MINIMIZE NOISE TO A LEVEL OF NINETY DECIBELS (90 DB) OR LESS.

ALL PLUGS OR BLOCKING SHALL BE RESTRAINED TO ENSURE THEY CANNOT BE WASHED DOWNSTREAM.

THE CONTRACTOR SHALL BE RESPONSIBLE FOR MAINTAINING CONTINUAL SANITARY SEWER SERVICE TO EACH RESIDENT FOR THE DURATION OF CONSTRUCTION. THE CONTRACTOR SHALL BE RESPONSIBLE FOR THE CLEAN UP, REPAIR, RESTORATION OF DAMAGED PROPERTY AND ANY COSTS AND CLAIMS RESULTING FROM SEWAGE BACKUPS.

PAYMENT FOR BYPASS PUMPING SHALL BE INCLUDED IN CONTRACT UNIT PRICE PER LINEAL FOOT OF SANITARY SEWER INSTALLED.

12. DEWATERING

THE CONTRACTOR SHALL USE ALL MEANS AT HIS DISPOSAL TO MAINTAIN DRY TRENCHES TO THE SATISFACTION OF THE DISTRICT.

GROUND WATER SHALL NOT BE PUMPED ON EXISTING GROUND SURFACES OR PAVEMENTS WHERE IT MAY CAUSE A TRAFFIC NUISANCE, OR INTO EXISTING SANITARY SEWERS; IT SHALL BE DISCHARGED TO A POINT ACCEPTABLE TO THE DISTRICT, WITH ALL EROSION CONTROL SPECIFICATIONS TAKEN INTO ACCOUNT.

DEWATERING WELL POINTS SHALL REQUIRE PERMITS ISSUED BY THE WINNEBAGO COUNTY HEALTH DEPARTMENT. THE INSTALLATION, OPERATION AND REMOVAL OF WELL POINTS SHALL CONFORM TO THE HEALTH DEPARTMENT REQUIREMENTS. THE HEALTH DEPARTMENT SHALL BE NOTIFIED PRIOR TO INSTALLING DEWATERING WELLS AND PRIOR TO ABANDONMENT OF WELL POINTS SO THAT THEY MAY BE PRESENT IF THEY DESIRE.

ANY PERMITS REQUIRED TO PERFORM DEWATERING WORK ON THIS PROJECT SHALL BE SECURED BY THE CONTRACTOR; IT SHALL BE HIS RESPONSIBILITY TO PROVIDE ANY BONDS, INSURANCE'S, GUARANTEES, ETC. AS REQUIRED BY SAID PERMIT. ABANDONMENT OF DEWATERING FACILITIES SHALL BE PERFORMED IN ACCORDANCE WITH APPLICABLE STATE AND COUNTY REQUIREMENTS.

IF GENERATORS ARE REQUIRED TO RUN ON A TWENTY–FOUR (24) HOUR BASIS, THE DEVICE(S) SHALL BE EQUIPPED WITH AN ADEQUATE MUFFLER AND PROPERLY MAINTAINED TO PREVENT EXCESSIVE NOISE. THE EQUIPMENT SUPPLIED SHALL BE EQUIPPED TO MINIMIZE NOISE TO A LEVEL OF NINETY DECIBELS (90 DB) OR LESS.

PAYMENT FOR DEWATERING SHALL BE INCLUDED IN THE UNIT PRICE FOR ALL SANITARY SEWER RELATED BID ITEMS, COMPLETE IN PLACE.

13. GENERAL LOCATION OF SANITARY SEWER IS GOVERNED BY EXISTING OBSTRUCTIONS IN THE FIELD. MINOR VARIATIONS IN LOCATION MAY BE MADE AFTER APPROVAL BY RRWRD TO FACILITATE CONSTRUCTION OPERATIONS.

14. SANITARY SEWER CONSTRUCTION SHALL BE STAGED TO CONFORM WITH THE ROADWAY MAINTENANCE OF TRAFFIC (MOT) PLANS. AT VARIOUS LOCATIONS, THE CONTRACTOR SHALL INSTALL TEMPORARY SANITARY SEWER PIPE, INSTALL PLUGS IN THE SANITARY SEWER OR MAKE TEMPORARY CONNECTIONS BETWEEN PROPOSED AND EXISTING SEWER PIPE FOR THE PURPOSE OF CONSTRUCTION STAGING. INSTALLATION AND REMOVAL OF THESE TEMPORARY STAGING ITEMS SHALL BE INCLUDED IN THE CONTRACT UNIT COSTS FOR ALL THE ASSOCIATED SANITARY SEWER ITEMS.

15. TRAFFIC CONTROL REQUIRED TO CONSTRUCTION PROPOSED SANITARY SEWER IMPROVEMENTS SHALL BE PAID FOR UNDER THE TRAFFIC CONTROL ITEMS DESCRIBED IN THE ROADWAY PLANS AND PROJECT SPECIAL PROVISIONS.

16. REMOVAL OF SANITARY SEWER AND SEWER SERVICES SHALL CONSIST OF COMPLETELY REMOVING THE EXISTING PIPE AND DISPOSING THE MATERIAL PER SECTION 202.03 OF THE IDOT STANDARD SPECIFICATIONS. PAYMENT FOR REMOVAL OF SANITARY SEWER AND SEWER MANHOLES SHALL BE INCLUDED IN THE UNIT PRICE FOR ALL SANITARY SEWER RELATED BID ITEMS, COMPLETE IN PLACE.

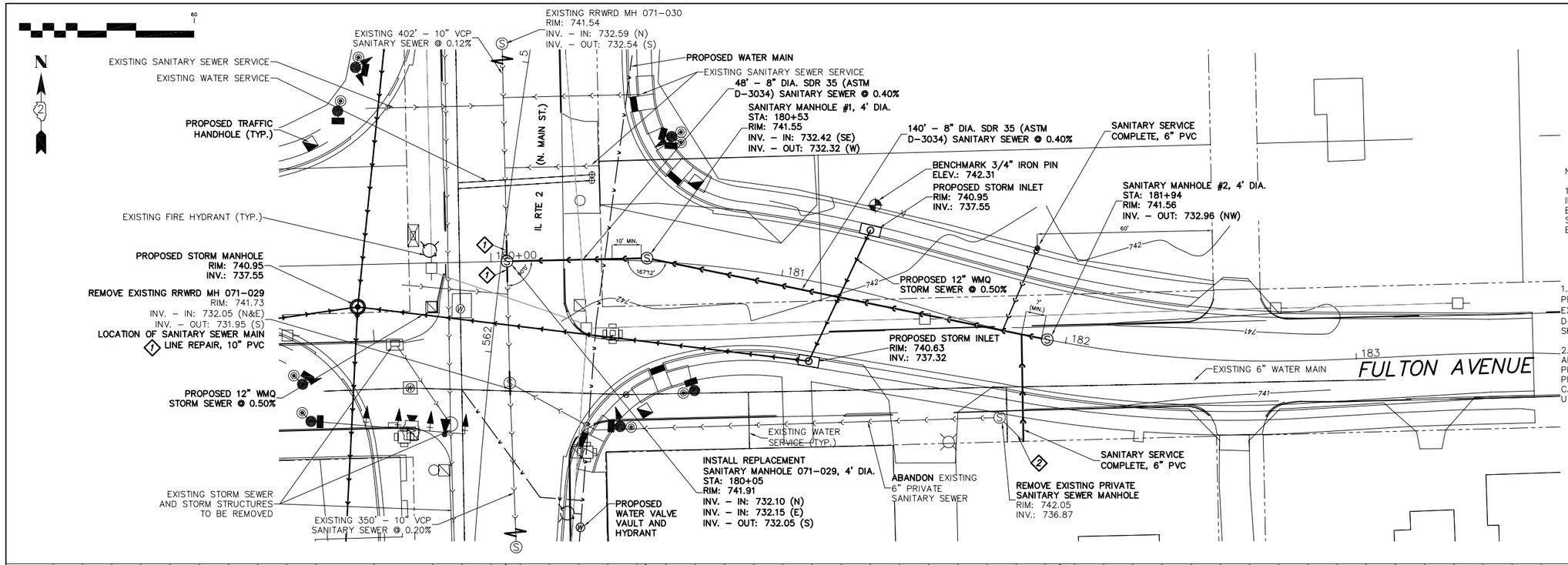

EXISTING WATER VALVE
EXISTING WATER VALVE VAULT
EXISTING LIGHT POLE
EXISTING UTILITY POLE
EXISTING TRAFFIC HAND HOLE
EXISTING TRAFFIC SIGNAL (ON POST)
EXISTING TRAFFIC SIGNAL (ON POST W/ MAST ARM)
EXISTING AERIAL UTILITY

NOTE:

1. THIS DRAWING GOVERNS THE PROPOSED SANITARY SEWER IMPROVEMENTS; PROPOSED STORM SEWER AND WATER MAIN ELEMENTS HAVE BEEN SHOWN FOR REFERENCE ONLY. STORM SEWER AND WATER MAIN CONSTRUCTION SHALL BE BASED ON A SEPARATE DESIGN DRAWING.

PLAN NOTES

1. REMOVE AND REPLACE A MINIMUM OF 3' PER SPECIAL PROVISIONS (8' MIN. AT LOCATION OF MANHOLE REMOVAL) OF EXISTING VCP SANITARY SEWER WITH 10" PVC SDR 35 (ASTM D–3034). ACTUAL LENGTH OF REMOVAL AND REPLACEMENT SHALL BE TO STRUCTURALLY SOUND VCP SANITARY SEWER.

2. ALIGNMENT OF EXISTING SANITARY SEWER SERVICE IS APPROXIMATE AND MAY VARY. CONTRACTOR SHALL PHYSICALLY LOCATE THE PIPE BACK TO THE PROPERTY LINE PRIOR TO RE–LAYING THE SANITARY SEWER SERVICE. EXTREME CARE SHALL BE TAKEN WHEN EXCAVATING NEAR EXISTING UTILITIES.

ELEVATIONS SHOWN HEREON ARE BASED ON WINGIS MONUMENT WIN 10.0N–4.9E WHICH HAS A PUBLISHED ELEVATION OF 741.21 AND IS LOCATED ON THE SOUTH SIDE OF CUSTER AVENUE APPROXIMATELY 150' EAST OF FREEMONT STREET.

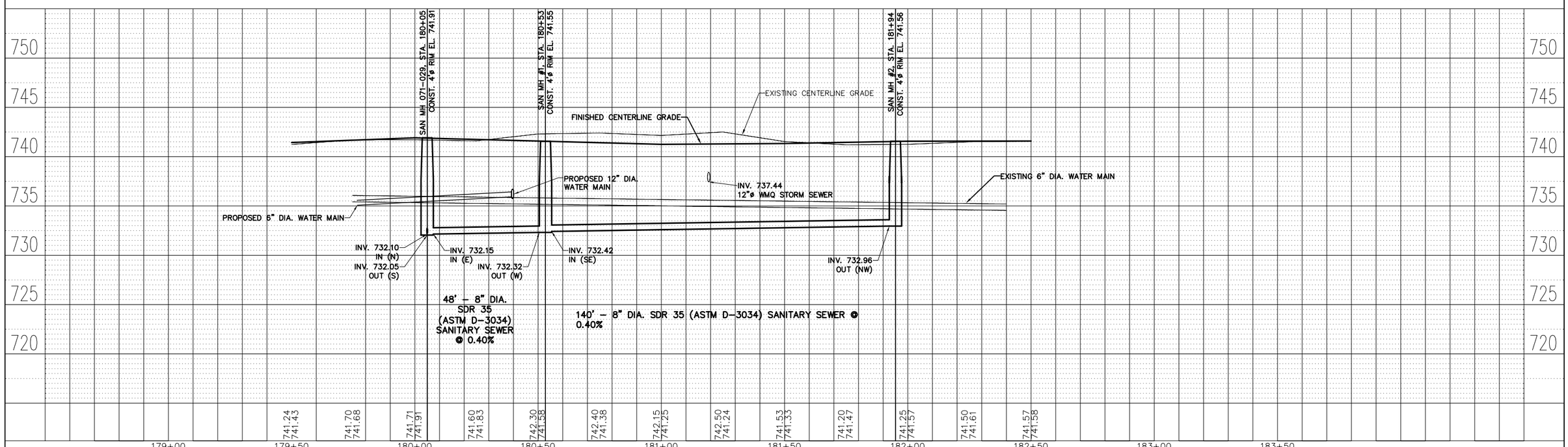

ROCK RIVER WATER RECLAMATION DISTRICT	USER NAME = –	DESIGNED –	REVISED –
		DRAWN JCW	REVISED –
	PLOT SCALE = AS NOTED	CHECKED –	REVISED –
	PLOT DATE = 10/24/2014	DATE 10/24/2014	REVISED –

STATE OF ILLINOIS
DEPARTMENT OF TRANSPORTATION

NORTH MAIN STREET SEWER REHABILITATION
NORTH OF AUBURN - CAPITAL IMPROVEMENT PROJECT #1214

SCALE: AS NOTED | SHEET OF SHEETS | STA. TO STA.

F.A. RTE.	SECTION	COUNTY	TOTAL SHEETS	SHEET NO.
734	78R2	WINNEBAGO	926	538
		CONTRACT NO. 64C21		
		ILLINOIS	FED. AID PROJECT	

PLAN NOTES

1. CONTRACTOR SHALL ENSURE 18" VERTICAL SEPARATION BETWEEN PROPOSED SANITARY SERVICE AND PROPOSED STORM SEWER

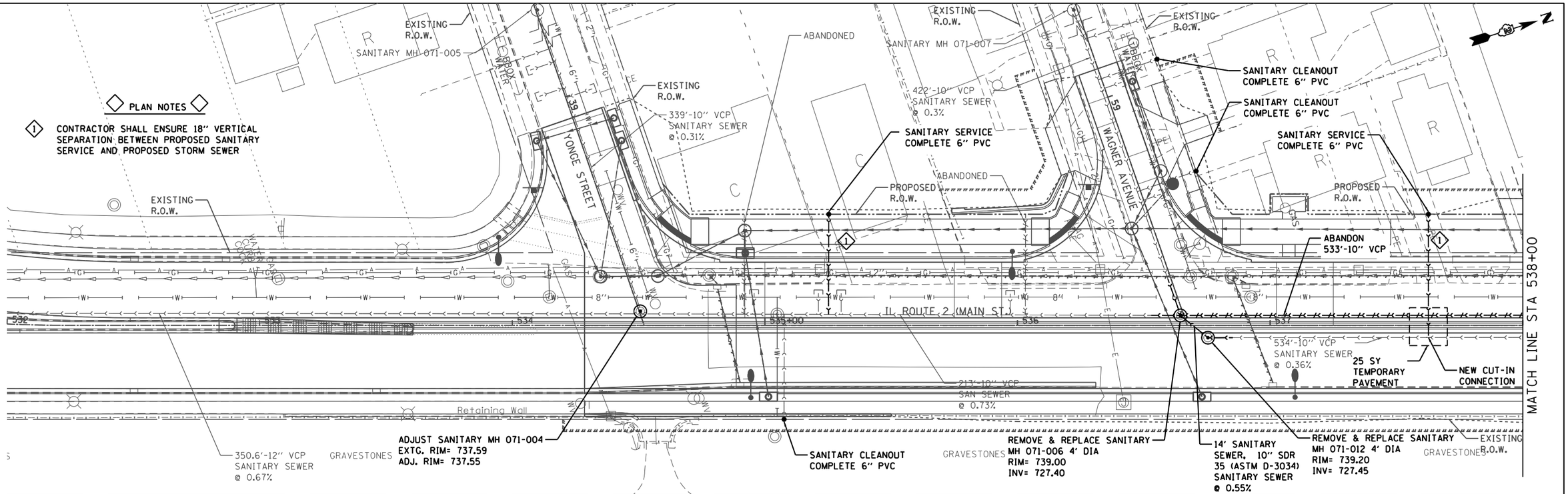

PLAN		BY	DATE
SURVEYED			
PLOTTED			
ALIGNMENT CHECKED			
RT. OF WAY CHECKED			
CADD FILE NAME			
NOTE BOOK NO.			

PROFILE		BY	DATE
SURVEYED			
PLOTTED			
GRADES CHECKED			
BKM. NOTED			
STRUCTURE NOTATNS CHKD			
NOTE BOOK NO.			

COMPANY NAME: $COMPANY_NAME$
PROJECT CONTACT: $PROJECT_CONTACT$
CLIENT: $CLIENT$ $TIME$
DATE PLOTTED: $DATE$
FILE NAME: $FILE$
PLOT DRIVER: PLT_DRV
PEN TABLE: PEN_TABLE

USER NAME = DSTANCZ	DESIGNED -	REVISED -	
	DRAWN -	REVISED -	
PLOT SCALE = $SCALE$	CHECKED -	REVISED -	
PLOT DATE = 7/28/2014	DATE -	REVISED -	

STATE OF ILLINOIS
DEPARTMENT OF TRANSPORTATION

IL ROUTE 2 (N. MAIN STREET)
SANITARY SEWER SHEETS

SCALE: 1" = 20' | SHEET 1 OF 29 SHEETS | STA. 534+38.63 TO STA. 538+00

F.A. RTE.	SECTION	COUNTY	TOTAL SHEETS	SHEET NO.
734	78R-2	WINNEBAGO	926	539

CONTRACT NO. 64C21

ILLINOIS FED. AID PROJECT

PLAN NOTES

1. CONTRACTOR SHALL ENSURE 18" VERTICAL SEPARATION BETWEEN PROPOSED SANITARY SERVICE AND PROPOSED STORM SEWER
2. CONTRACTOR SHALL PROTECT EXISTING SANITARY SEWER DURING INSTALLATION OF LIGHT POLE FOUNDATIONS

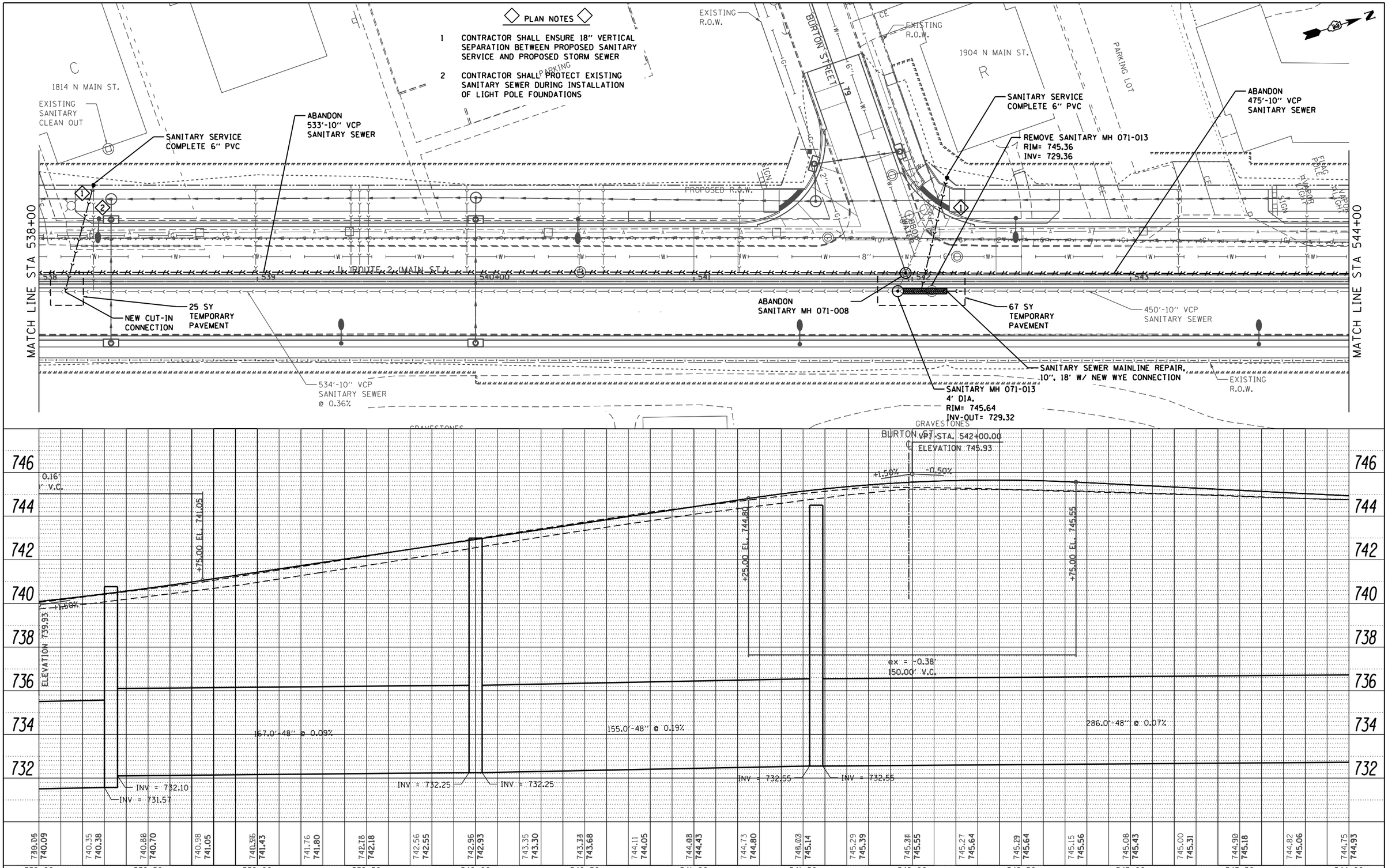

PLAN		BY	DATE
SURVEYED			
PLOTTED			
ALIGNMENT CHECKED			
RT. OF WAY CHECKED			
CADD FILE NAME			
NOTE BOOK NO.			

PROFILE		BY	DATE
SURVEYED			
PLOTTED			
GRADES CHECKED			
BM. NOTED			
STRUCTURE NOTATNS CHKD			
NOTE BOOK NO.			

COMPANY NAME: $COMPANY_NAME$
PROJECT CONTACT: $PROJECT_CONTACT$
CREATED BY: $USER$ $TIME$
DATE PLOTTED: $DATE$
FILE NAME: $FILES$
PLOT DRIVER: PLT_DRV
PEN TABLE: PEN_TABLE

USER NAME = DSTANCZ	DESIGNED -	REVISED -
	DRAWN -	REVISED -
PLOT SCALE = $SCALE$	CHECKED -	REVISED -
PLOT DATE = 7/28/2014	DATE -	REVISED -

STATE OF ILLINOIS
DEPARTMENT OF TRANSPORTATION

IL ROUTE 2 (N. MAIN STREET)
SANITARY SEWER SHEETS

SCALE: 1" = 20' | SHEET 2 OF 29 SHEETS | STA. 538+00 TO STA. 544+00

F.A. RTE.	SECTION	COUNTY	TOTAL SHEETS	SHEET NO.
734	78R-2	WINNEBAGO	926	540

CONTRACT NO. 64C21

ILLINOIS FED. AID PROJECT

◇ PLAN NOTES ◇

1. CONTRACTOR SHALL ENSURE 18" VERTICAL SEPARATION BETWEEN PROPOSED SANITARY SERVICE AND PROPOSED STORM SEWER

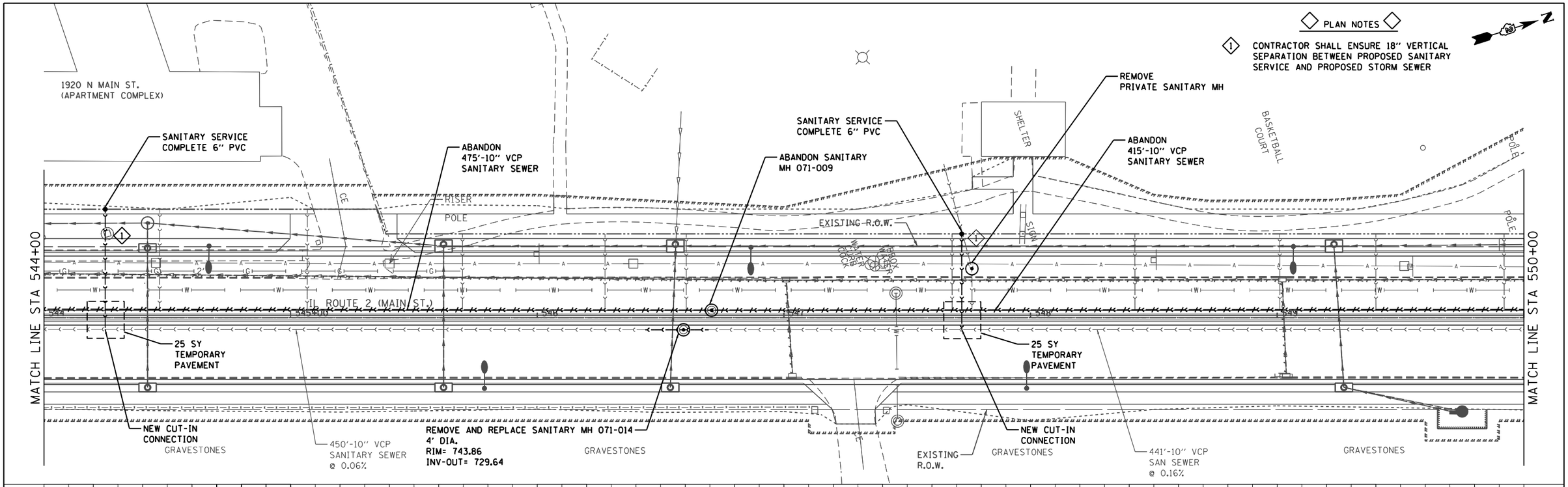

PLAN		BY	DATE
SURVEYED			
PLOTTED			
ALIGNMENT CHECKED			
RT. OF WAY CHECKED			
CADD FILE NAME			
NOTE BOOK NO.			

PROFILE		BY	DATE
SURVEYED			
PLOTTED			
GRADES CHECKED			
BLM. NOTED			
STRUCTURE NOTATNS CHKD			
NOTE BOOK NO.			

COMPANY NAME: $COMPANY_NAME$
PROJECT CONTACT: $PROJECT_CONTACT$
CELL PHONE: $CELL_PHONE$
DATE PLOTTED: $DATE$ $TIME$
FILE NAME: $FILES$
PLOT DRIVER: PLT_DRV
PEN TABLE: PEN_TABLE

USER NAME = DSTANCZ	DESIGNED -	REVISED -	
	DRAWN -	REVISED -	
PLOT SCALE = $SCALE$	CHECKED -	REVISED -	
PLOT DATE = 7/28/2014	DATE -	REVISED -	

STATE OF ILLINOIS
DEPARTMENT OF TRANSPORTATION

IL ROUTE 2 (N. MAIN STREET)
SANITARY SEWER SHEETS

SCALE: 1" = 20' | SHEET 3 OF 29 SHEETS | STA. 544+00 TO STA. 550+00

F.A. RTE.	SECTION	COUNTY	TOTAL SHEETS	SHEET NO.
734	78R-2	WINNEBAGO	926	541
		CONTRACT NO. 64C21		
		ILLINOIS FED. AID PROJECT		

PLAN NOTES

1. CONTRACTOR SHALL ENSURE 18" VERTICAL SEPARATION BETWEEN PROPOSED SANITARY SERVICE AND PROPOSED STORM SEWER
2. CONTRACTOR SHALL PROTECT EXISTING SANITARY SEWER DURING INSTALLATION OF LIGHT POLE FOUNDATION

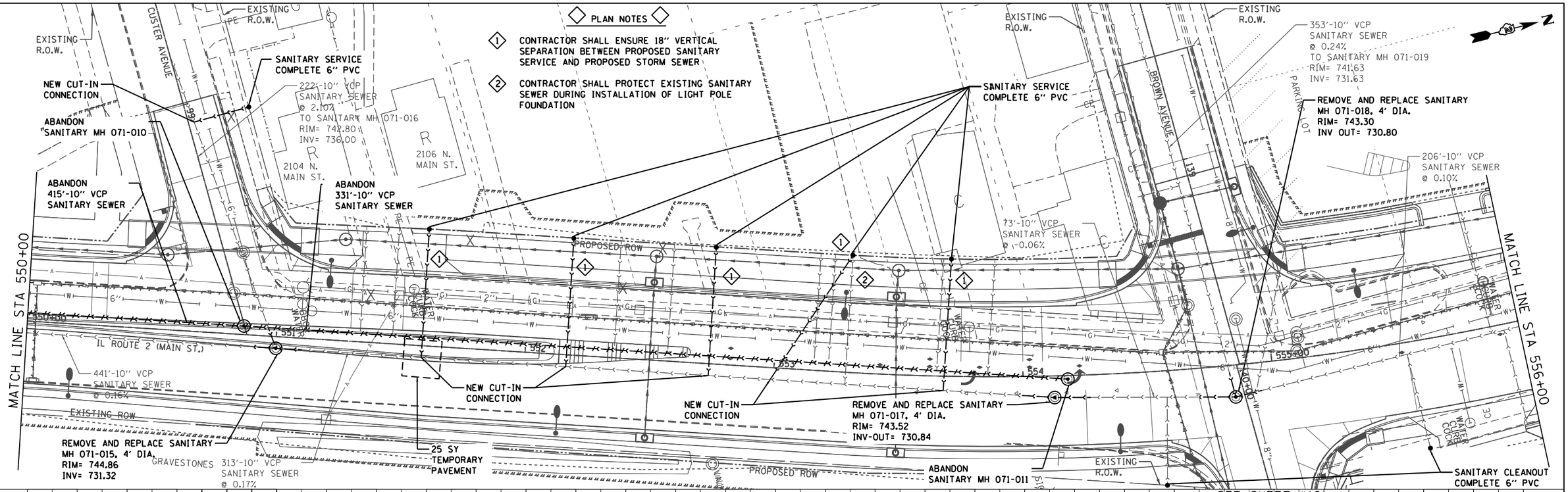

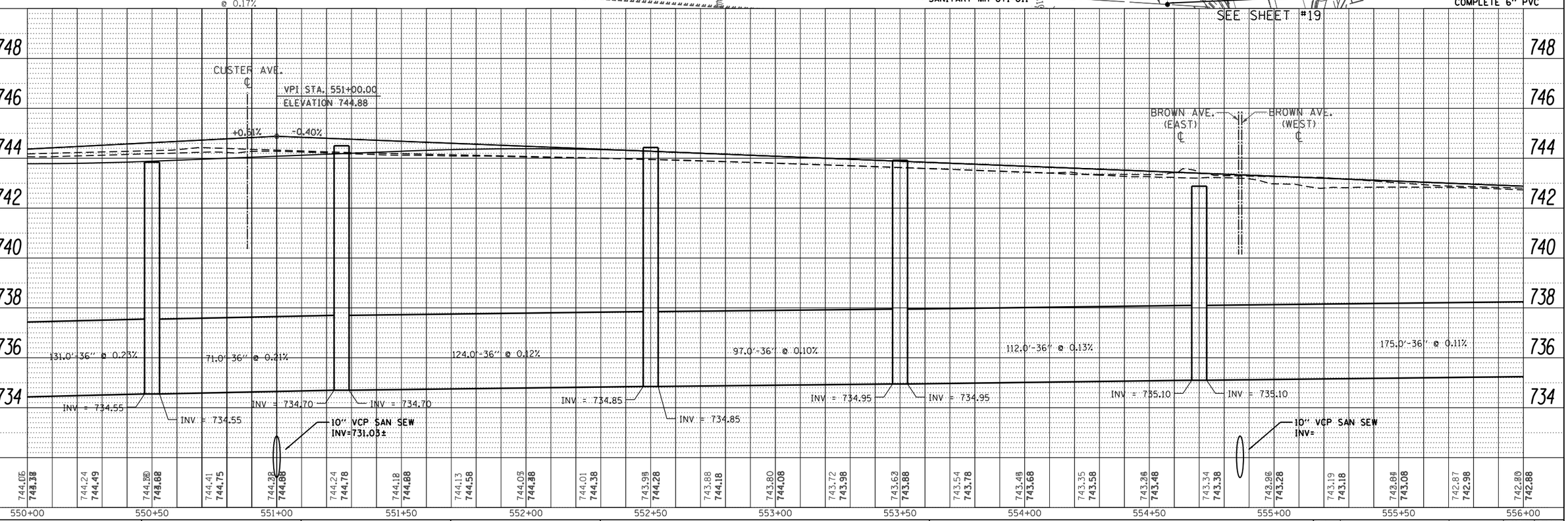

PLAN	BY	DATE
SURVEYED		
PLOTTED		
ALIGNMENT CHECKED		
RT. OF WAY CHECKED		
CADD FILE NAME		
NOTE BOOK NO.		

PROFILE	BY	DATE
SURVEYED		
PLOTTED		
GRADES CHECKED		
B.M. NOTED		
STRUCTURE NOTAT'NS CHK'D		
NOTE BOOK NO.		

COMPANY NAME: $COMPANY_NAME$
PROJECT CONTACT: $PROJECT_CONTACT$
CLIENT: $CLIENT$
DATE PLOTTED: $DATE$ $TIME$
FILE NAME: $FILE$
PLOT DRIVER: PLT_DRV
PEN TABLE: PEN_TABLE

USER NAME = DSTANCZ	DESIGNED -	REVISED -
	DRAWN -	REVISED -
PLOT SCALE = $SCALE$	CHECKED -	REVISED -
PLOT DATE = 7/28/2014	DATE -	REVISED -

STATE OF ILLINOIS
DEPARTMENT OF TRANSPORTATION

IL ROUTE 2 (N. MAIN STREET)
SANITARY SEWER SHEETS

SCALE: 1" = 20' | SHEET 4 OF 29 SHEETS | STA. 550+00 TO STA. 556+00

F.A. RTE.	SECTION	COUNTY	TOTAL SHEETS	SHEET NO.
734	78R-2	WINNEBAGO	926	542

CONTRACT NO. 64C21

ILLINOIS FED. AID PROJECT

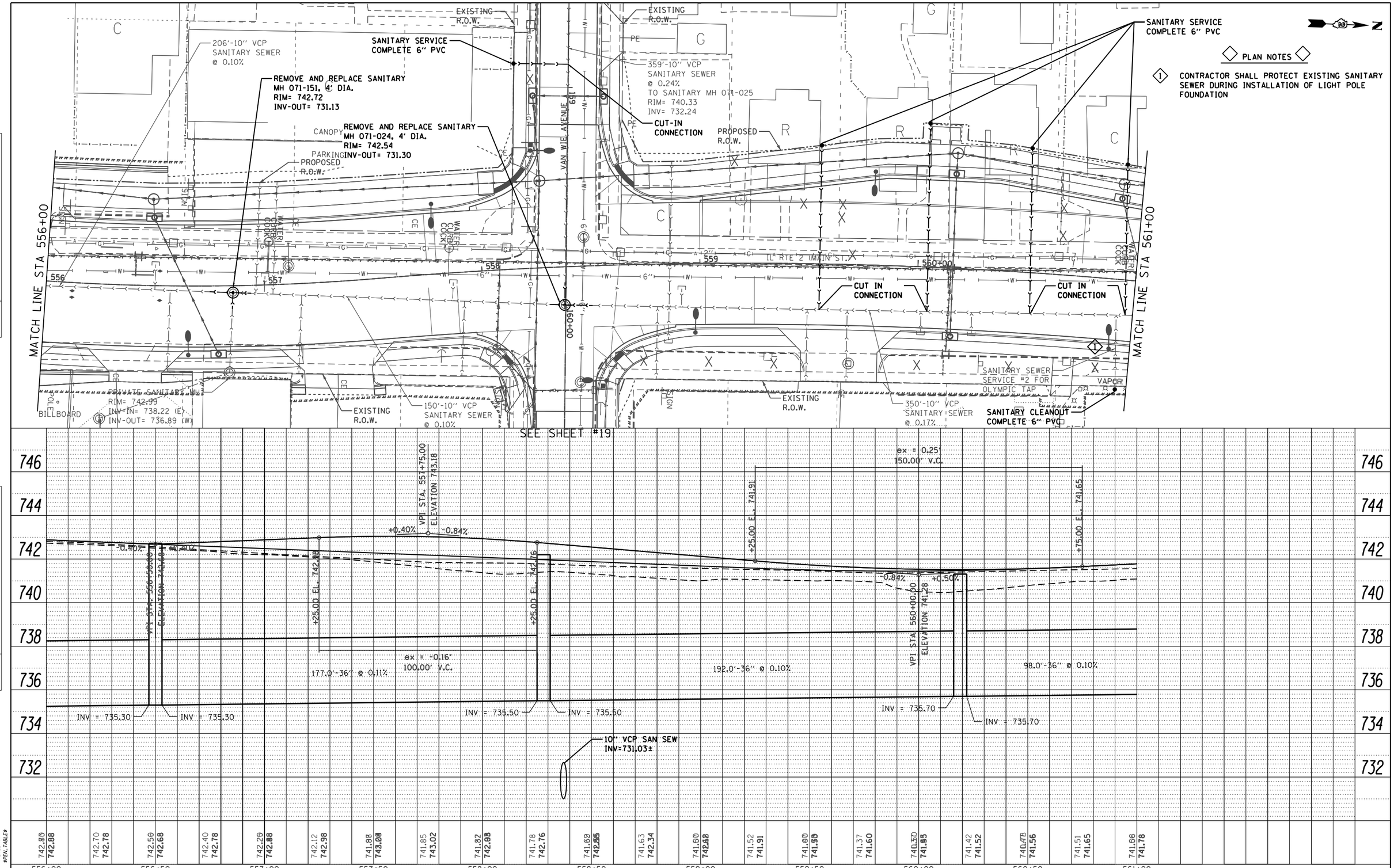

PLAN	BY	DATE
SURVEYED		
PLOTTED		
ALIGNMENT CHECKED		
RT. OF WAY CHECKED		
CADD FILE NAME		
NOTE BOOK NO.		

PROFILE	BY	DATE
SURVEYED		
PLOTTED		
GRADES CHECKED		
BLM. NOTED		
STRUCTURE NOTATNS CHKD		
NOTE BOOK NO.		

COMPANY NAME: $COMPANY_NAME$
PROJECT CONTACT: $PROJECT_CONTACT$
CLIENT: $CLIENT$ $TIME$
DATE PLOTTED: $DATE$
FILE NAME: $FILE$
PLOT DRIVER: PLT_DRV
PEN TABLE: PEN_TABLE

USER NAME = DSTANCZ	DESIGNED -	REVISED -	
	DRAWN -	REVISED -	
PLOT SCALE = $SCALE$	CHECKED -	REVISED -	
PLOT DATE = 7/28/2014	DATE -	REVISED -	

STATE OF ILLINOIS
DEPARTMENT OF TRANSPORTATION

IL ROUTE 2 (N. MAIN STREET)
SANITARY SEWER SHEETS

SCALE: 1" = 20' | SHEET 5 OF 29 SHEETS | STA. 556+00 TO STA. 561+00

F.A. RTE.	SECTION	COUNTY	TOTAL SHEETS	SHEET NO.
734	78R-2	WINNEBAGO	926	543

CONTRACT NO. 64C21

ILLINOIS FED. AID PROJECT

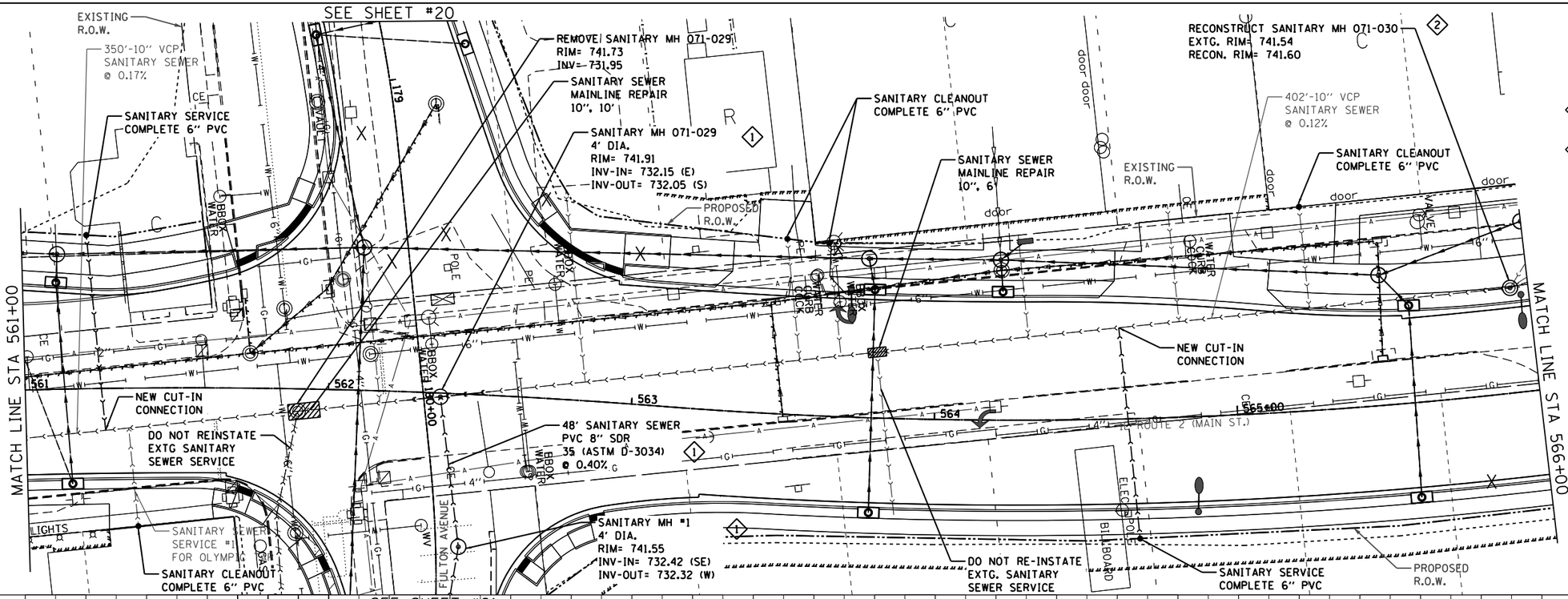

◇ PLAN NOTES ◇

1. SEE ALSO FULTON AVENUE SANITARY SEWER PLAN AND PROFILE DRAWING
2. PLUG EXISTING SANITARY SEWER SERVICES (3 EACH), INCIDENTAL TO MH RECONSTRUCTION, 2 WEST SERVICES TO BE RECONNECTED TO SANITARY SEWER UPSTREAM OF MH 071-030. EAST SERVICE TO BE ABANDONED

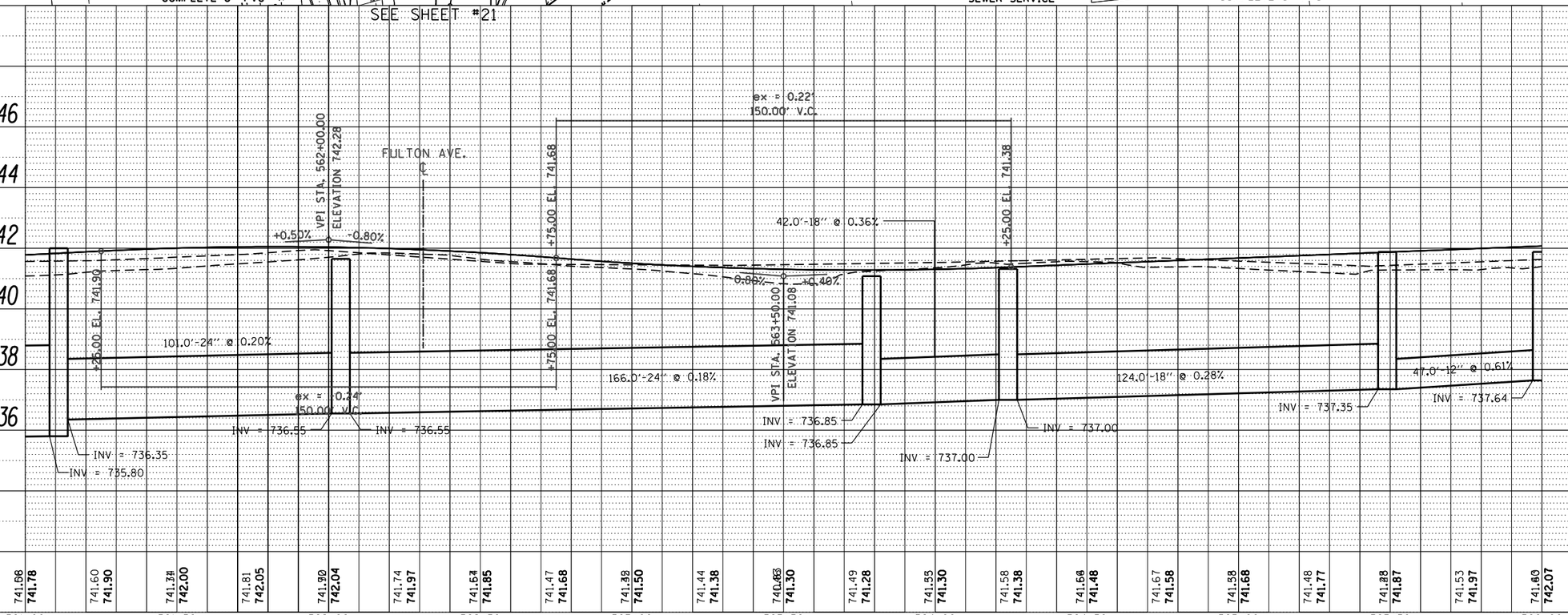

USER NAME = DSTANCZ	DESIGNED -	REVISED -	
	DRAWN -	REVISED -	
PLOT SCALE = $SCALE$	CHECKED -	REVISED -	
PLOT DATE = 7/28/2014	DATE -	REVISED -	

STATE OF ILLINOIS
DEPARTMENT OF TRANSPORTATION

IL ROUTE 2 (N. MAIN STREET)
SANITARY SEWER SHEETS

SCALE: 1" = 20' | SHEET 6 OF 29 SHEETS | STA. 561+00 TO STA. 566+00

F.A. RTE.	SECTION	COUNTY	TOTAL SHEETS	SHEET NO.
734	78R-2	WINNEBAGO	926	544

CONTRACT NO. 64C21

ILLINOIS FED. AID PROJECT

PLAN: SURVEYED / PLOTTED / ALIGNMENT CHECKED / RT. OF WAY CHECKED / CADD FILE NAME — NOTE BOOK NO. — BY — DATE

PROFILE: SURVEYED / PLOTTED / GRADES CHECKED / B.M. NOTED / STRUCTURE NOTATNS CHKD — NOTE BOOK NO. — BY — DATE

COMPANY NAME: $COMPANY_NAME$
PROJECT CONTACT: $PROJECT_CONTACT$
CREATED BY: $CREATOR$
DATE PLOTTED: $DATE$ $TIME$
FILE NAME: $FILES$
PLOT DRIVER: PLT_DRV
PEN TABLE: PEN_TABLE

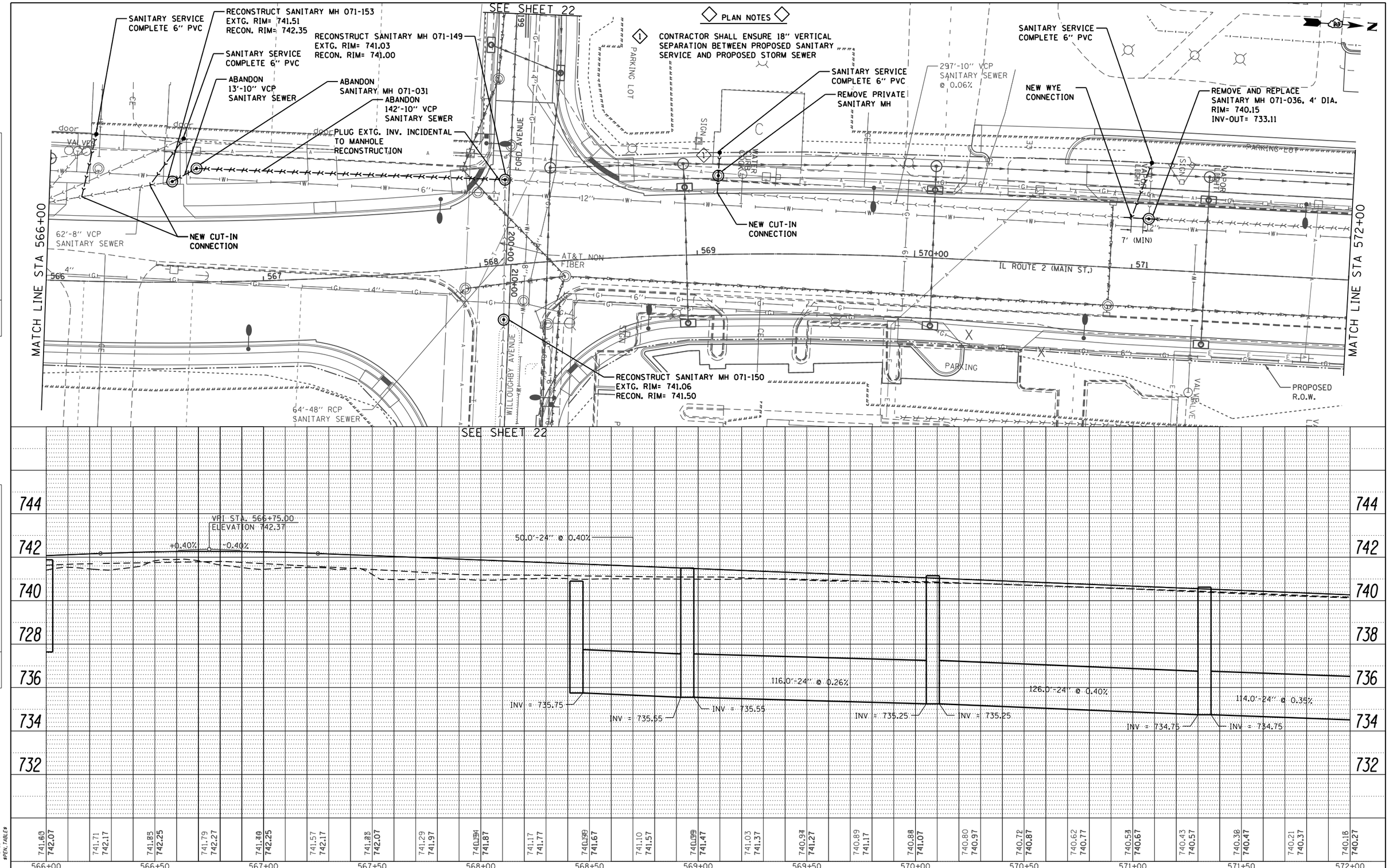

PLAN	BY	DATE
SURVEYED		
PLOTTED		
ALIGNMENT CHECKED		
RT. OF WAY CHECKED		
CADD FILE NAME		
NOTE BOOK NO.		

PROFILE	BY	DATE
SURVEYED		
PLOTTED		
GRADES CHECKED		
B.M. NOTED		
STRUCTURE NOTAT'NS CHK'D		
NOTE BOOK NO.		

COMPANY NAME: $COMPANY_NAME$
PROJECT CONTACT: $PROJECT_CONTACT$
COLORS: $COLORS$
DATE PLOTTED: $DATE$ $TIME$
FILE NAME: $FILES$
PLOT DRIVER: PLT_DRV
PEN TABLE: PEN_TABLE

USER NAME = DSTANCZ	DESIGNED -	REVISED -
	DRAWN -	REVISED -
PLOT SCALE = $SCALE$	CHECKED -	REVISED -
PLOT DATE = 7/28/2014	DATE -	REVISED -

STATE OF ILLINOIS
DEPARTMENT OF TRANSPORTATION

IL ROUTE 2 (N. MAIN STREET)
SANITARY SEWER SHEETS

SCALE: 1" = 20' | SHEET 7 OF 29 SHEETS | STA. 566+00 TO STA. 572+00

F.A. RTE.	SECTION	COUNTY	TOTAL SHEETS	SHEET NO.
734	78R-2	WINNEBAGO	926	545

CONTRACT NO. 64C21

ILLINOIS FED. AID PROJECT

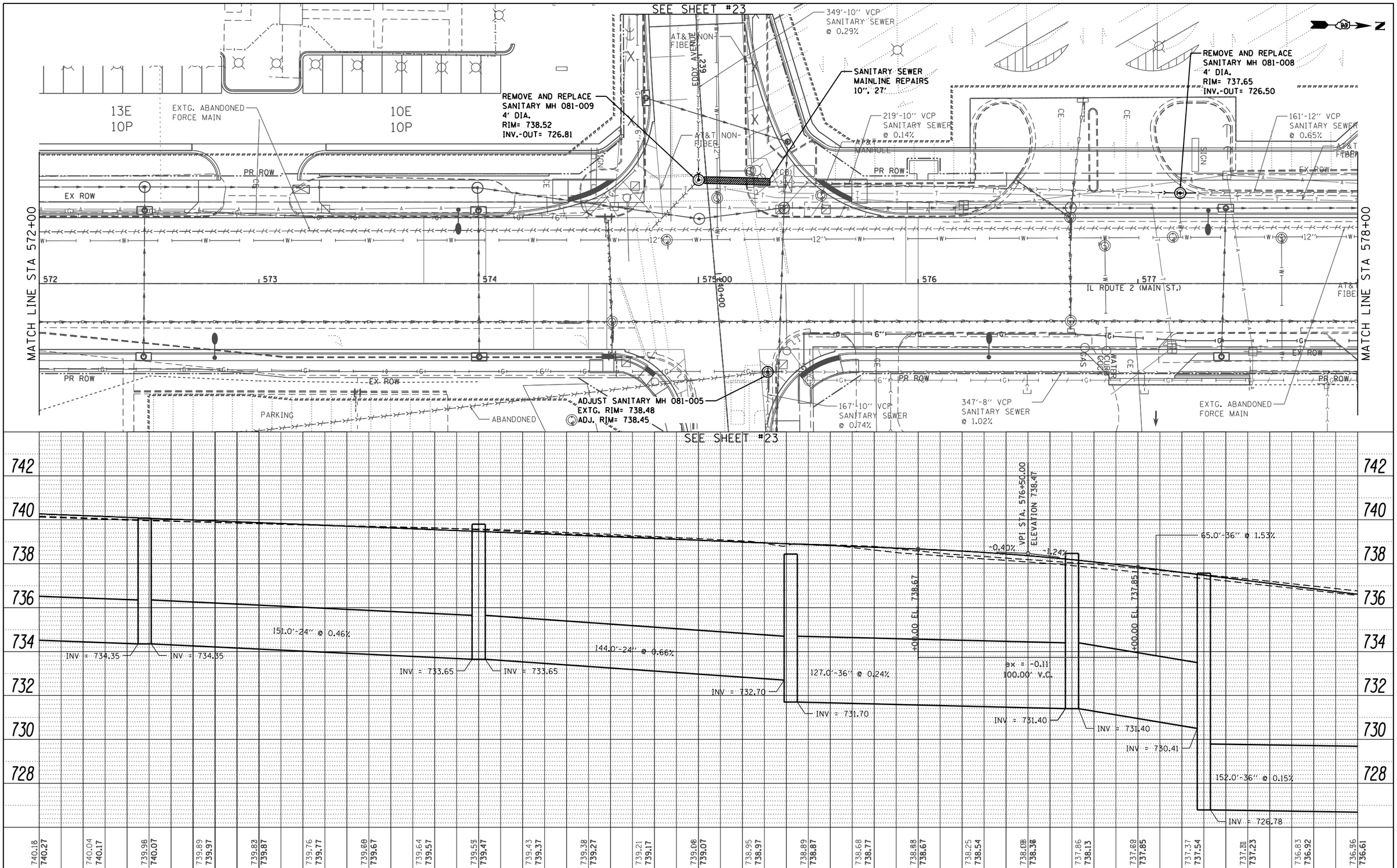

PLAN	BY	DATE
SURVEYED		
PLOTTED		
ALIGNMENT CHECKED		
RT. OF WAY CHECKED		
CADD FILE NAME		
NOTE BOOK NO.		

PROFILE	BY	DATE
SURVEYED		
PLOTTED		
GRADES CHECKED		
BM. NOTED		
STRUCTURE NOTATNS CHKD		
NOTE BOOK NO.		

COMPANY NAME: $COMPANY_NAME$
PROJECT CONTACT: $PROJECT_CONTACT$
FILE NAME: $FILENAME$
DATE PLOTTED: $DATE$ $TIME$
FILE NAME: $FILES$
PLOT DRIVER: PLT_DRV
PEN TABLE: PEN_TABLE

USER NAME = DSTANCZ	DESIGNED -	REVISED -
	DRAWN -	REVISED -
PLOT SCALE = $SCALE$	CHECKED -	REVISED -
PLOT DATE = 7/28/2014	DATE -	REVISED -

STATE OF ILLINOIS
DEPARTMENT OF TRANSPORTATION

IL ROUTE 2 (N. MAIN STREET)
SANITARY SEWER SHEETS

SCALE: 1" = 20' | SHEET 8 OF 29 SHEETS | STA. 572+00 TO STA. 578+00

F.A. RTE.	SECTION	COUNTY	TOTAL SHEETS	SHEET NO.
734	78R-2	WINNEBAGO	926	546

CONTRACT NO. 64C21

ILLINOIS FED. AID PROJECT

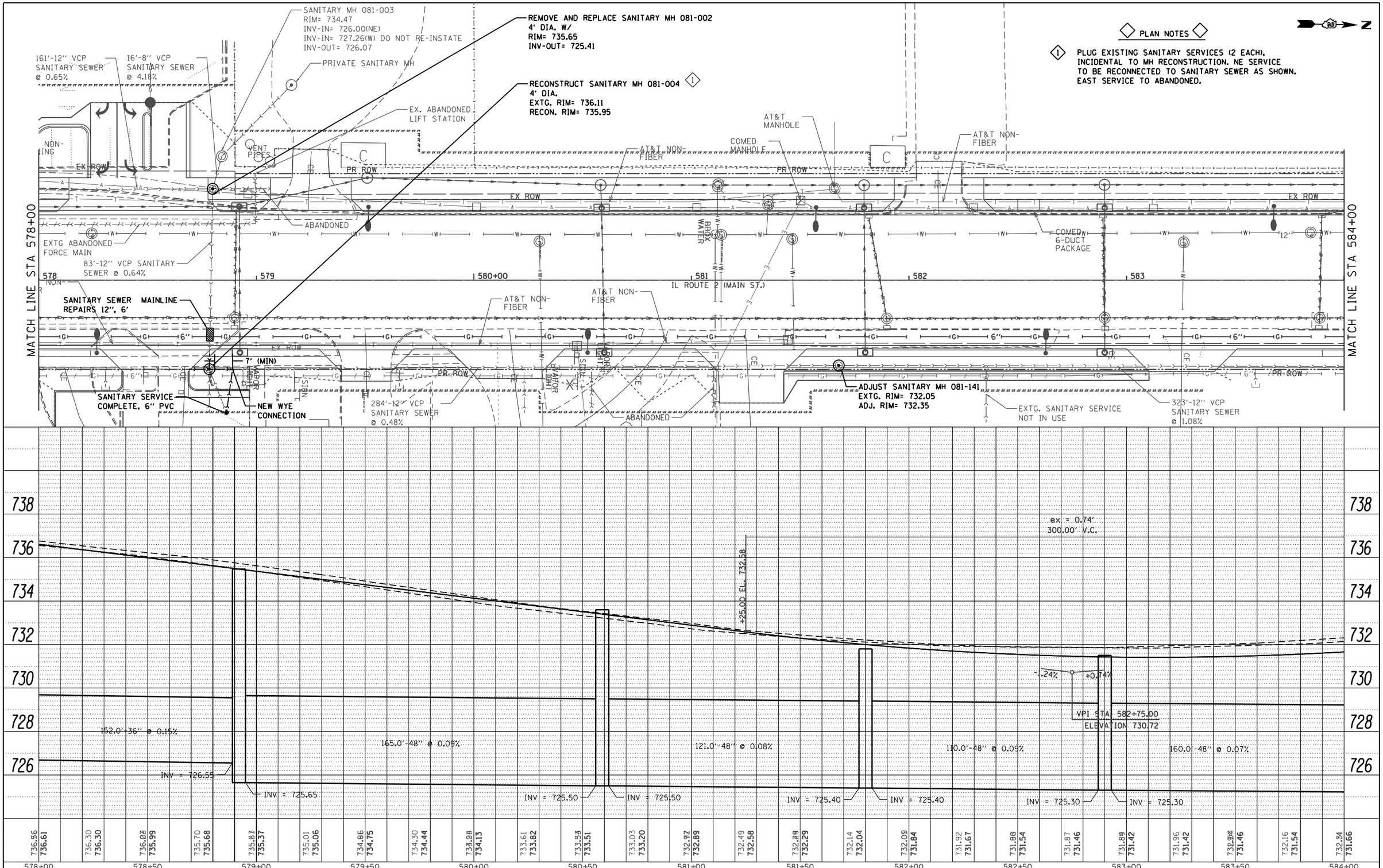

PLAN	BY	DATE
SURVEYED		
PLOTTED		
ALIGNMENT CHECKED		
RT. OF WAY CHECKED		
CADD FILE NAME		
NOTE BOOK NO.		

PROFILE	BY	DATE
SURVEYED		
PLOTTED		
GRADES CHECKED		
BLM. NOTED		
STRUCTURE NOTAT'NS CH'KD		
NOTE BOOK NO.		

COMPANY NAME: $COMPANY_NAME$
PROJECT CONTACT: $PROJECT_CONTACT$
CLIENT: $CLIENT$
DATE PLOTTED: $DATE$ $TIME$
FILE NAME: $FILES$
PLOT DRIVER: PLT_DRV
PEN TABLE: PEN_TABLE

USER NAME = DSTANCZ	DESIGNED -	REVISED -	
	DRAWN -	REVISED -	
PLOT SCALE = $SCALE$	CHECKED -	REVISED -	
PLOT DATE = 7/28/2014	DATE -	REVISED -	

STATE OF ILLINOIS
DEPARTMENT OF TRANSPORTATION

IL ROUTE 2 (N. MAIN STREET)
SANITARY SEWER SHEETS

SCALE: 1" = 20' | SHEET 9 OF 29 SHEETS | STA. 578+00 TO STA. 584+00

F.A. RTE.	SECTION	COUNTY	TOTAL SHEETS	SHEET NO.
734	78R-2	WINNEBAGO	926	547

CONTRACT NO. 64C21

ILLINOIS FED. AID PROJECT

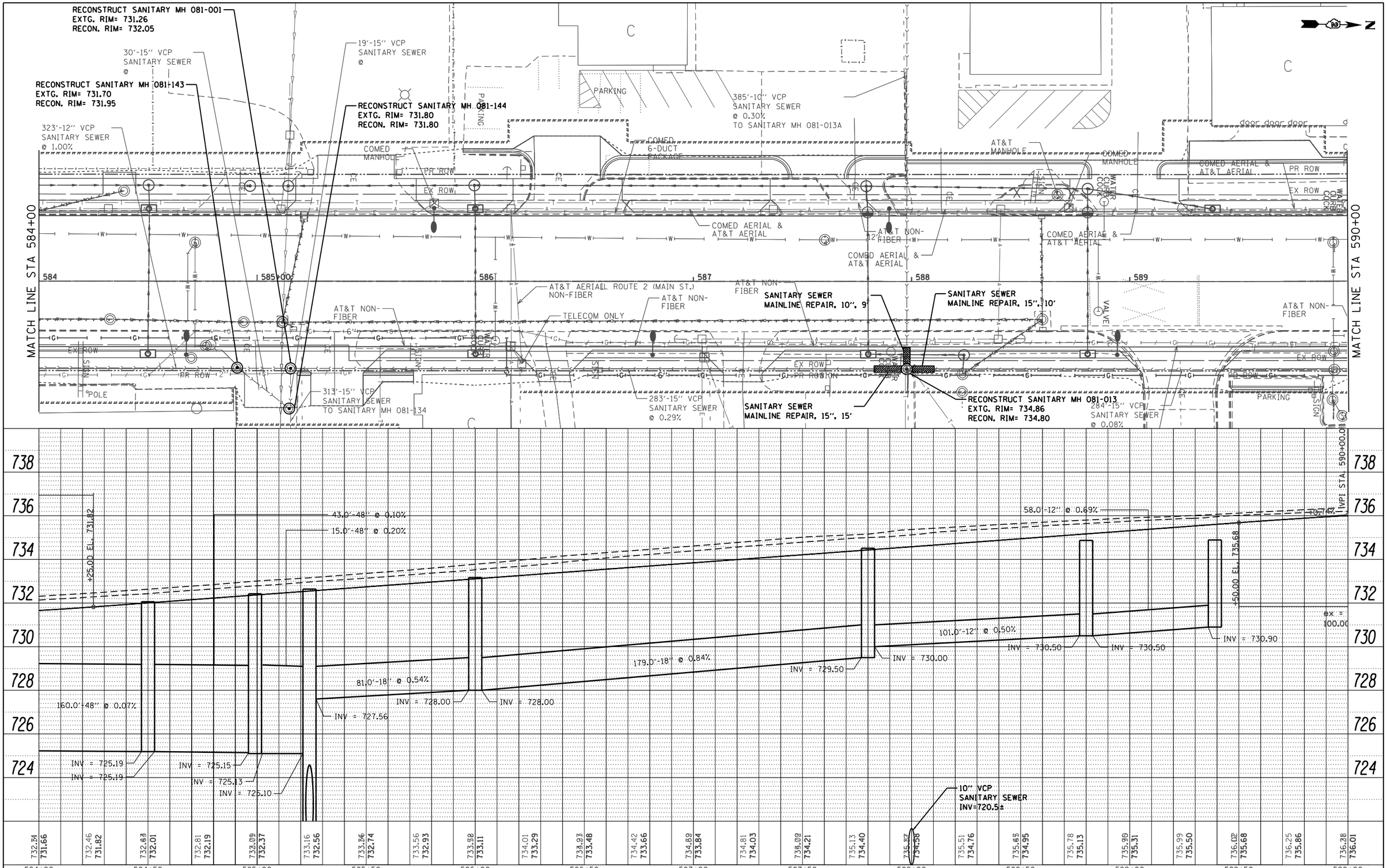

USER NAME = DSTANCZ	DESIGNED -	REVISED -
	DRAWN -	REVISED -
PLOT SCALE = $SCALE$	CHECKED -	REVISED -
PLOT DATE = 7/28/2014	DATE -	REVISED -

STATE OF ILLINOIS
DEPARTMENT OF TRANSPORTATION

IL ROUTE 2 (N. MAIN STREET)
SANITARY SEWER SHEETS

SCALE: 1" = 20' | SHEET 10 OF 29 SHEETS | STA. 584+00 TO STA. 590+00

F.A. RTE.	SECTION	COUNTY	TOTAL SHEETS	SHEET NO.
734	78R-2	WINNEBAGO	926	548

CONTRACT NO. 64C21

ILLINOIS FED. AID PROJECT

RECONSTRUCT SANITARY MH 081-059
EXTG. RIM= 736.48
RECON. RIM= 736.50

284'-15" VCP SANITARY SEWER @ 0.08%

173'-15" VCP SANITARY SEWER @ 0.20%

RECONSTRUCT SANITARY MH 081-044
EXTG. RIM= 736.23
RECON. RIM= 736.70

RECONSTRUCT SANITARY MH 081-045
EXTG. RIM= 735.93
RECON. RIM= 736.50

113'-15" VCP SANITARY SEWER @

REMOVE AND REPLACE SANITARY MH 081-046
4' DIA.
RIM= 736.90
INV-OUT= 725.51

NEW WYE CONNECTION

138'-10" VCP SANITARY SEWER @ 0.37% TO SAN MH 081-047 RIM= 736.27

SANITARY SERVICE COMPLETE, 6" PVC

135' SANITARY SEWER, 10" PVC SDR 35 (ASTM D-3034) @ 1.16%

MATCH LINE STA 590+00

MATCH LINE STA 596+00

590+00 591 592 593 595+00

280+00

IL ROUTE 2 (MAIN ST.)

PIERCE AVENUE

COMED 6-DUCT PACKAGE

COMED AERIAL & AT&T AERIAL

AT&T NON-FIBER

PR ROW

EX ROW

COMED MANHOLE

TO AUTO ZONE

COUNTRY CLUB BEACH DRIVE

SANITARY MH 081-060

PARKING LOT

STREET LIGHT ONLY

GAS METER

CUST POLE

RISER POLE

SIGN

PLAN NOTES

1. CONSTRUCT NEW CONNECTION FOR PROPOSED 10" SANITARY SEWER AT INV. ELEV. 724.00 PLUG EXISTING INV. TO BE ABANDONED, INCIDENTAL TO MH RECONSTRUCTION

PLAN — SURVEYED / PLOTTED / ALIGNMENT CHECKED / RT. OF WAY CHECKED / CADD FILE NAME — NOTE BOOK NO. ____ — BY — DATE

PROFILE — SURVEYED / PLOTTED / GRADES CHECKED / B.M. NOTED / STRUCTURE NOTAT'NS CHK'D — NOTE BOOK NO. ____ — BY — DATE

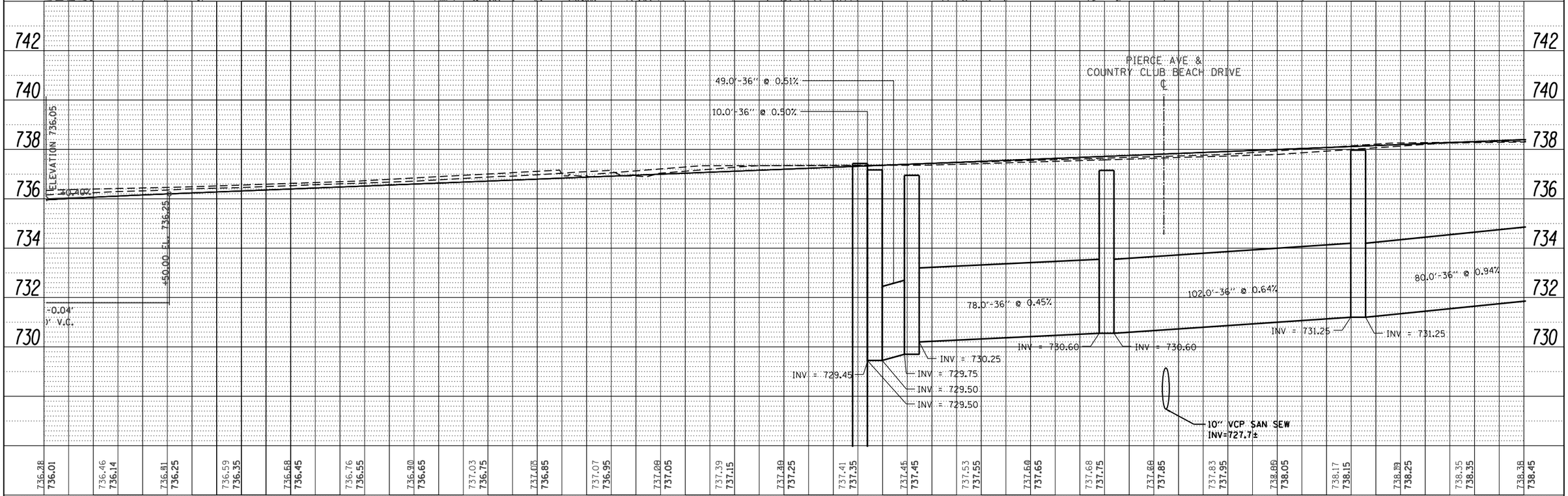

COMPANY NAME: $COMPANY_NAME$
PROJECT CONTACT: $PROJECT_CONTACT$
CLOSURE: $CLOSURE$
DATE PLOTTED: $DATE$ $TIME$
FILE NAME: $FILE$
PLOT DRIVER: PLT_DRV
PEN TABLE: PEN_TABLE

USER NAME = DSTANCZ	DESIGNED -	REVISED -
	DRAWN -	REVISED -
PLOT SCALE = $SCALE$	CHECKED -	REVISED -
PLOT DATE = 7/28/2014	DATE -	REVISED -

STATE OF ILLINOIS
DEPARTMENT OF TRANSPORTATION

IL ROUTE 2 (N. MAIN STREET)
SANITARY SEWER SHEETS

SCALE: 1" = 20' | SHEET 11 OF 29 SHEETS | STA. 590+00 TO STA. 596+00

F.A. RTE.	SECTION	COUNTY	TOTAL SHEETS	SHEET NO.
734	78R-2	WINNEBAGO	926	549

CONTRACT NO. 64C21

ILLINOIS FED. AID PROJECT

NO SANITARY SEWER
IN PUBLIC R.O.W.

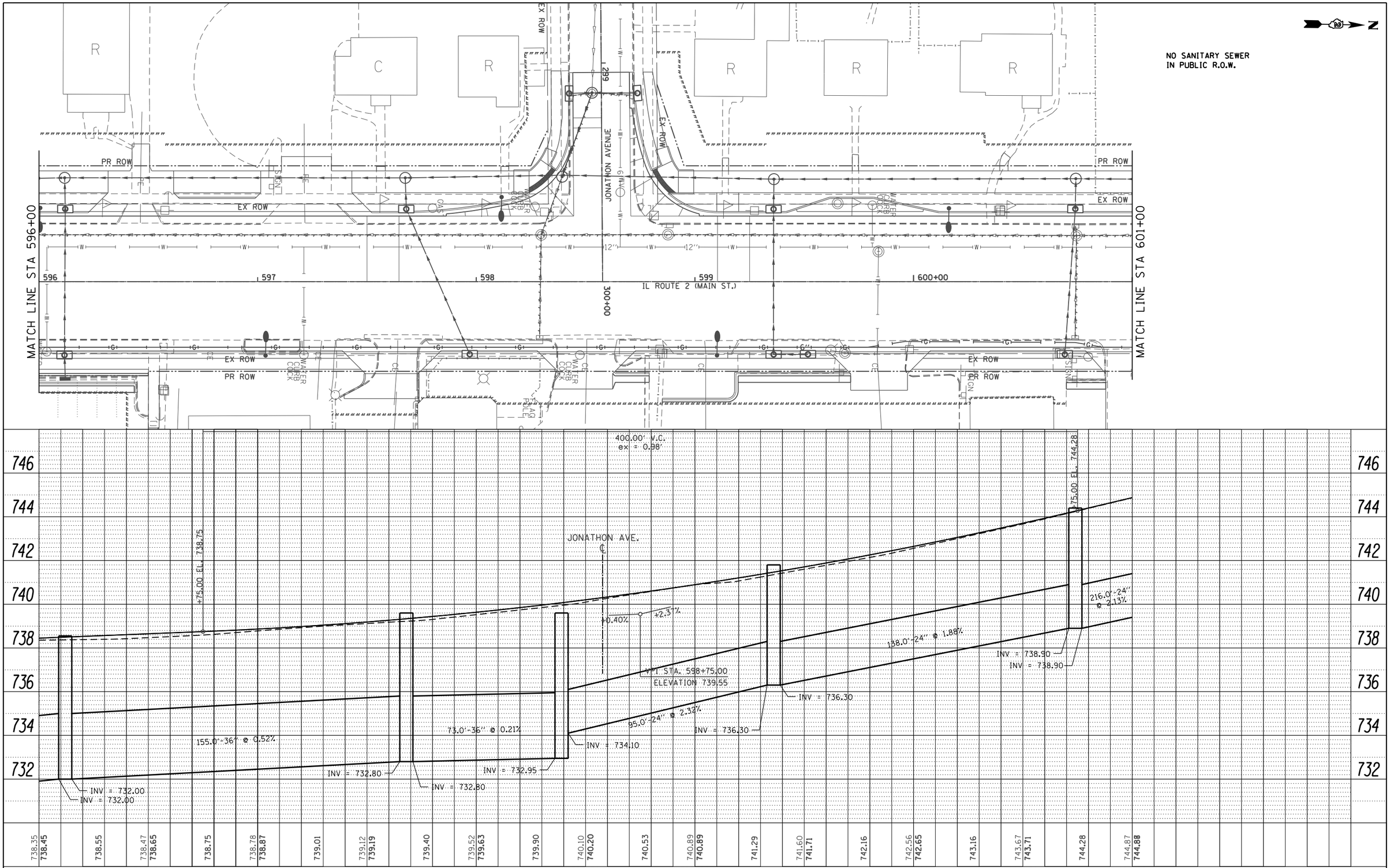

PLAN	BY	DATE
SURVEYED		
PLOTTED		
ALIGNMENT CHECKED		
RT. OF WAY CHECKED		
CADD FILE NAME		
NOTE BOOK NO.		

PROFILE	BY	DATE
SURVEYED		
PLOTTED		
GRADES CHECKED		
B.M. NOTED		
STRUCTURE NOTATNS CHKD		
NOTE BOOK NO.		

COMPANY NAME: $COMPANY_NAME$
PROJECT CONTACT: $PROJECT_CONTACT$
CLIENT: $CLIENT$
DATE PLOTTED: $DATE$ $TIME$
FILE NAME: $FILES$
PLOT DRIVER: PLT_DRV
PEN TABLE: PEN_TABLE

USER NAME = DSTANCZ	DESIGNED -	REVISED -
	DRAWN -	REVISED -
PLOT SCALE = $SCALE$	CHECKED -	REVISED -
PLOT DATE = 7/28/2014	DATE -	REVISED -

STATE OF ILLINOIS
DEPARTMENT OF TRANSPORTATION

IL ROUTE 2 (N. MAIN STREET)
SANITARY SEWER SHEETS

SCALE: 1" = 20' | SHEET 12 OF 29 SHEETS | STA. 596+00 TO STA. 601+00

F.A. RTE.	SECTION	COUNTY	TOTAL SHEETS	SHEET NO.
734	78R-2	WINNEBAGO	926	550

CONTRACT NO. 64C21

ILLINOIS FED. AID PROJECT

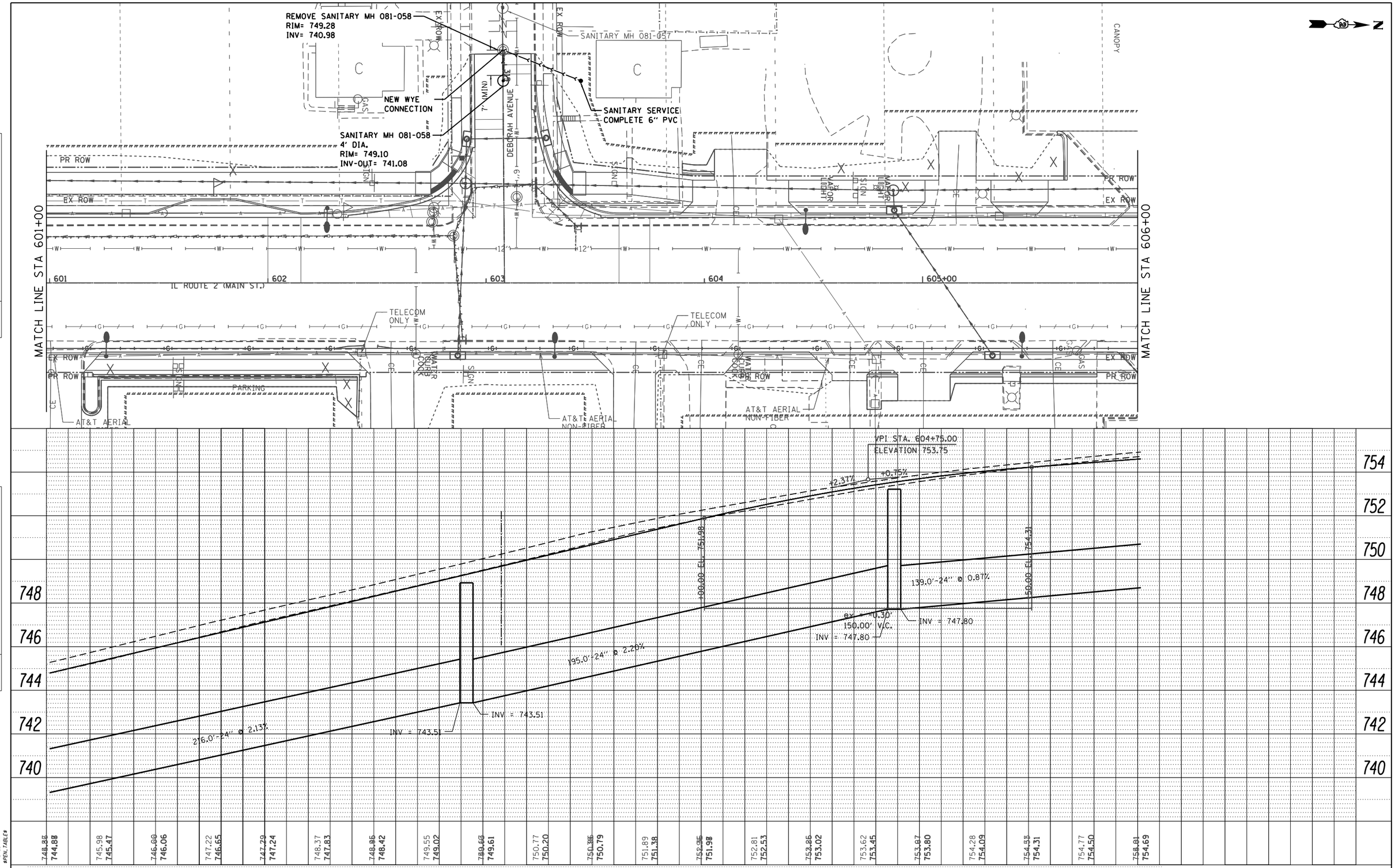

PLAN	BY	DATE
SURVEYED		
PLOTTED		
ALIGNMENT CHECKED		
RT. OF WAY CHECKED		
CADD FILE NAME		
NOTE BOOK NO.		

PROFILE	BY	DATE
SURVEYED		
PLOTTED		
GRADES CHECKED		
B.M. NOTED		
STRUCTURE NOTATNS CHKD		
NOTE BOOK NO.		

COMPANY NAME: $COMPANY_NAME$
PROJECT CONTACT: $PROJECT_CONTACT$
CREATED: $CREATED$
DATE PLOTTED: $DATE$ $TIME$
FILE NAME: $FILE$
PLOT DRIVER: PLT_DRV
PEN TABLE: PEN_TABLE

USER NAME = DSTANCZ	DESIGNED -	REVISED -	
	DRAWN -	REVISED -	
PLOT SCALE = $SCALE$	CHECKED -	REVISED -	
PLOT DATE = 7/28/2014	DATE -	REVISED -	

STATE OF ILLINOIS
DEPARTMENT OF TRANSPORTATION

IL ROUTE 2 (N. MAIN STREET)
SANITARY SEWER SHEETS

SCALE: 1" = 20' | SHEET 13 OF 29 SHEETS | STA. 601+00 TO STA. 606+00

F.A. RTE.	SECTION	COUNTY	TOTAL SHEETS	SHEET NO.
734	78R-2	WINNEBAGO	926	551

CONTRACT NO. 64C21

ILLINOIS FED. AID PROJECT

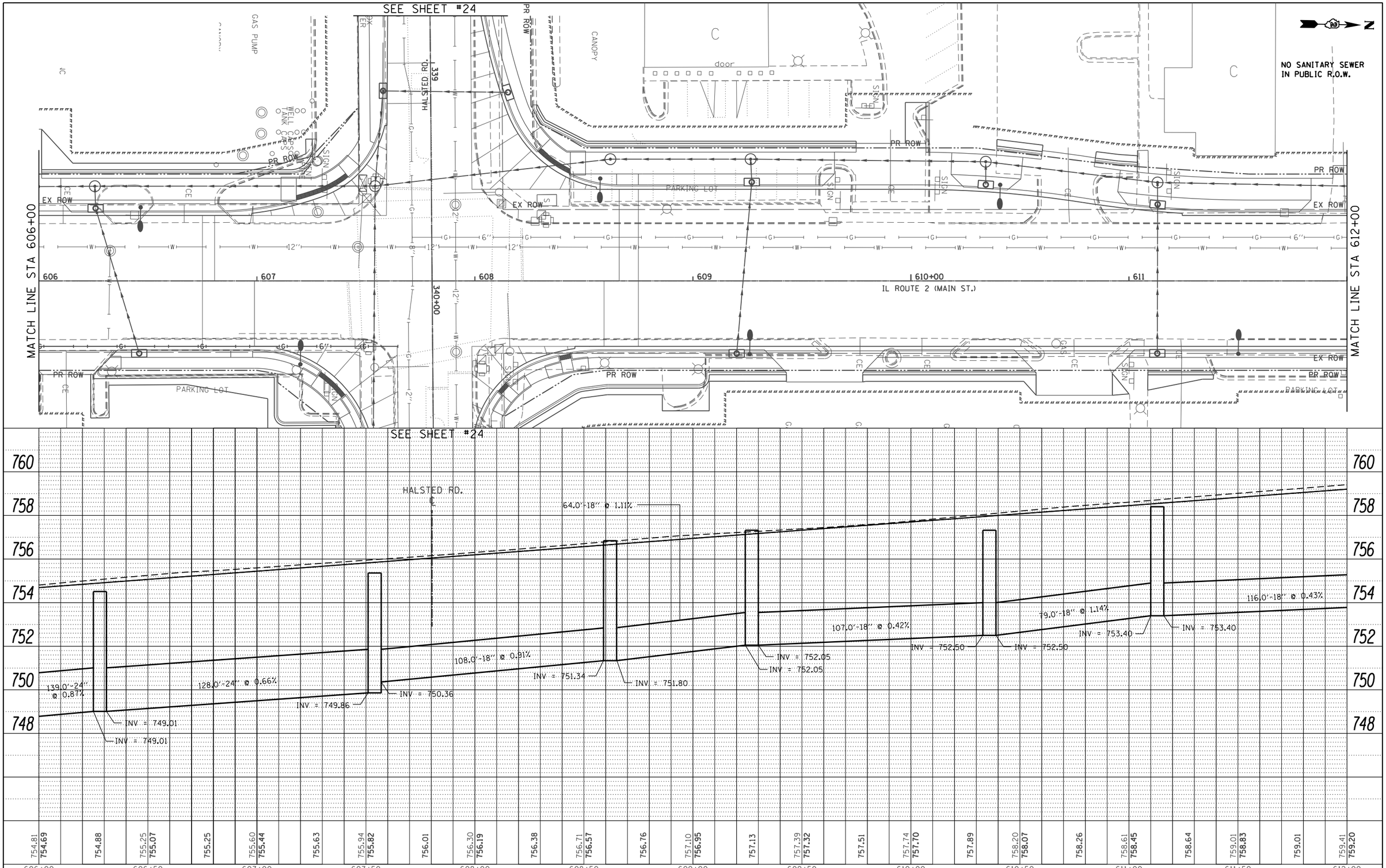

PLAN	BY	DATE
SURVEYED		
PLOTTED		
ALIGNMENT CHECKED		
RT. OF WAY CHECKED		
CADD FILE NAME		
NOTE BOOK NO.		

PROFILE	BY	DATE
SURVEYED		
PLOTTED		
GRADES CHECKED		
B.M. NOTED		
STRUCTURE NOTAT'NS CHK'D		
NOTE BOOK NO.		

COMPANY NAME: $COMPANY_NAME$
PROJECT CONTACT: $PROJECT_CONTACT$
CLIENT: $CLIENT$
DATE PLOTTED: $DATE$ $TIME$
FILE NAME: $FILES$
PLOT DRIVER: PLT_DRV
PEN TABLE: PEN_TABLE

USER NAME = DSTANCZ	DESIGNED -	REVISED -
	DRAWN -	REVISED -
PLOT SCALE = $SCALE$	CHECKED -	REVISED -
PLOT DATE = 7/28/2014	DATE -	REVISED -

STATE OF ILLINOIS
DEPARTMENT OF TRANSPORTATION

IL ROUTE 2 (N. MAIN STREET)
SANITARY SEWER SHEETS

SCALE: 1" = 20' | SHEET 14 OF 29 SHEETS | STA. 606+00 TO STA. 612+00

F.A. RTE.	SECTION	COUNTY	TOTAL SHEETS	SHEET NO.
734	78R-2	WINNEBAGO	926	552

CONTRACT NO. 64C21

ILLINOIS FED. AID PROJECT

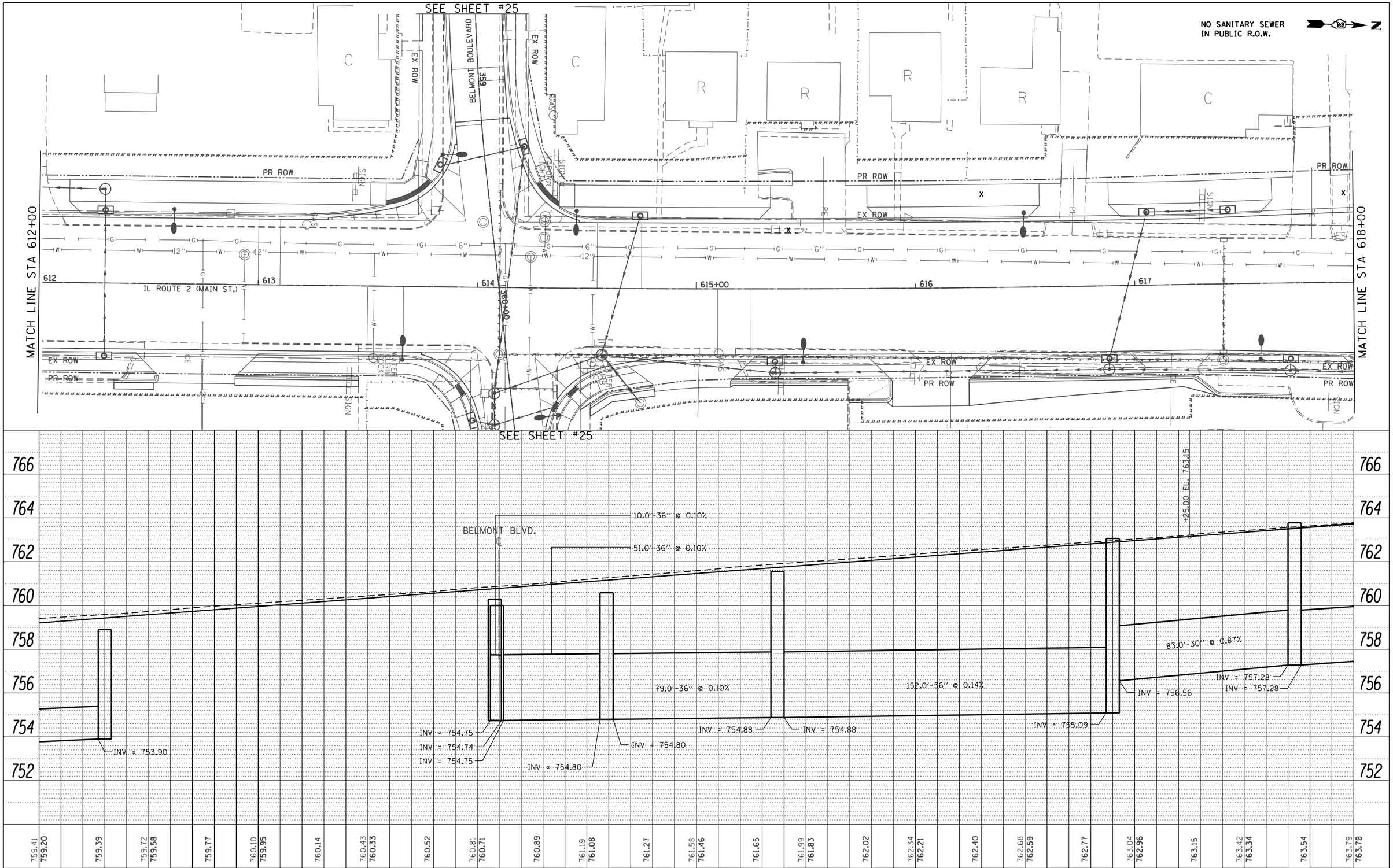

PLAN	BY	DATE
SURVEYED		
PLOTTED		
ALIGNMENT CHECKED		
RT. OF WAY CHECKED		
CADD FILE NAME		
NOTE BOOK NO.		

PROFILE	BY	DATE
SURVEYED		
PLOTTED		
GRADES CHECKED		
B.M. NOTED		
STRUCTURE NOTATNS CHKD		
NOTE BOOK NO.		

COMPANY NAME: $COMPANY.NAME$
PROJECT CONTACT: $PROJECT.CONTACT$
CLIENT: $CLIENT$
DATE PLOTTED: $DATE$ $TIME$
FILE NAME: $FILE$
PLOT DRIVER: $PL.T.DRV$
PEN TABLE: $PEN.TABLE$

USER NAME = DSTANCZ	DESIGNED -	REVISED -	
	DRAWN -	REVISED -	
PLOT SCALE = $SCALE$	CHECKED -	REVISED -	
PLOT DATE = 7/28/2014	DATE -	REVISED -	

STATE OF ILLINOIS
DEPARTMENT OF TRANSPORTATION

IL ROUTE 2 (N. MAIN STREET)
SANITARY SEWER SHEETS

SCALE: 1" = 20' | SHEET 15 OF 29 SHEETS | STA. 612+00 TO STA. 618+00

F.A. RTE.	SECTION	COUNTY	TOTAL SHEETS	SHEET NO.
734	78R-2	WINNEBAGO	926	553

CONTRACT NO. 64C21

ILLINOIS FED. AID PROJECT

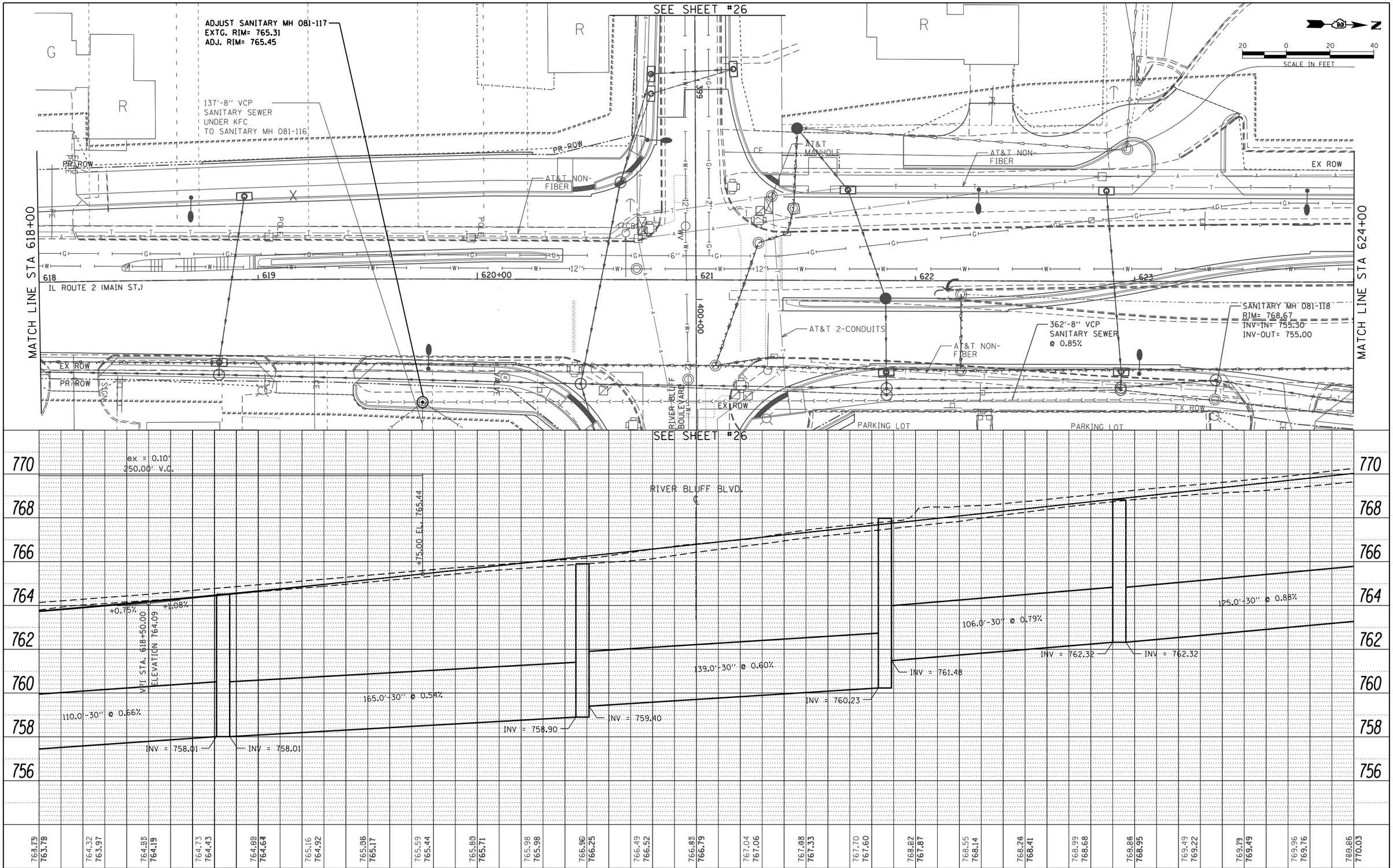

PLAN	BY	DATE
SURVEYED		
PLOTTED		
ALIGNMENT CHECKED		
RT. OF WAY CHECKED		
CADD FILE NAME		
NOTE BOOK NO.		

PROFILE	BY	DATE
SURVEYED		
PLOTTED		
GRADES CHECKED		
B.M. NOTED		
STRUCTURE NOTAT'NS CHK'D		
NOTE BOOK NO.		

COMPANY NAME: $COMPANY_NAME$
PROJECT CONTACT: $PROJECT_CONTACT$
CLIENT: $CLIENT$
DATE PLOTTED: $DATE$ $TIME$
FILE NAME: $FILES$
PLOT DRIVER: PLT_DRV
PEN TABLE: PEN_TABLE

USER NAME = DSTANCZ	DESIGNED -	REVISED -
	DRAWN -	REVISED -
PLOT SCALE = $SCALE$	CHECKED -	REVISED -
PLOT DATE = 7/28/2014	DATE -	REVISED -

STATE OF ILLINOIS
DEPARTMENT OF TRANSPORTATION

IL ROUTE 2 (N. MAIN STREET)
SANITARY SEWER SHEETS

SCALE: 1" = 20' | SHEET 16 OF 29 SHEETS | STA. 618+00 TO STA. 624+00

F.A. RTE.	SECTION	COUNTY	TOTAL SHEETS	SHEET NO.
734	78R-2	WINNEBAGO	926	554

CONTRACT NO. 64C21

ILLINOIS FED. AID PROJECT

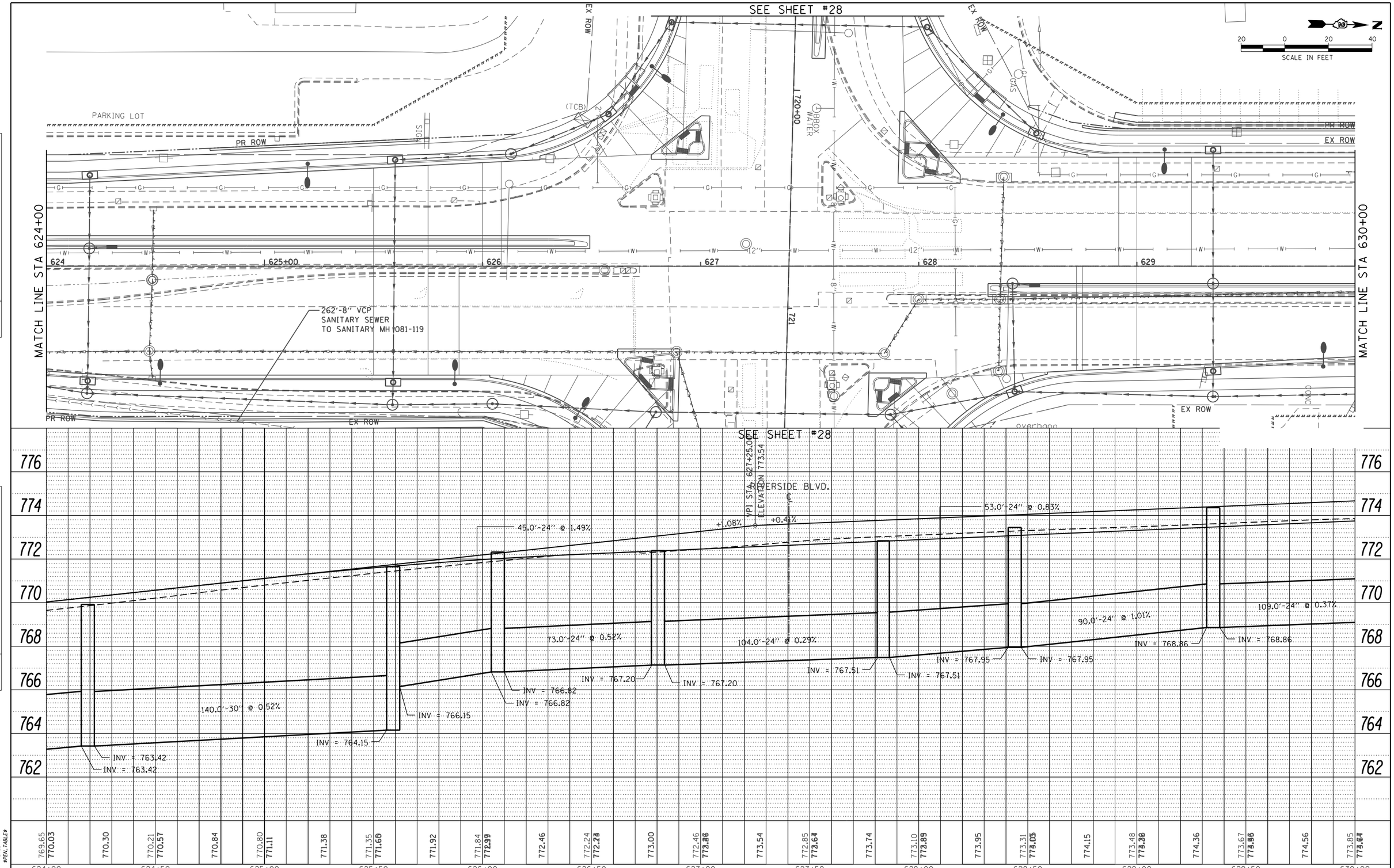

PLAN	BY	DATE
SURVEYED		
PLOTTED		
ALIGNMENT CHECKED		
RT. OF WAY CHECKED		
CADD FILE NAME		
NOTE BOOK NO.		

PROFILE	BY	DATE
SURVEYED		
PLOTTED		
GRADES CHECKED		
B.M. NOTED		
STRUCTURE NOTAT'NS CHK'D		
NOTE BOOK NO.		

COMPANY NAME: $COMPANY_NAME$
PROJECT CONTACT: $PROJECT_CONTACT$
CLOSURE: $CLOSURE$
DATE PLOTTED: $DATE$ $TIME$
FILE NAME: $FILES$
PLOT DRIVER: PLT_DRV
PEN TABLE: PEN_TABLE

USER NAME = DSTANCZ	DESIGNED -	REVISED -	
	DRAWN -	REVISED -	
PLOT SCALE = $SCALE$	CHECKED -	REVISED -	
PLOT DATE = 7/28/2014	DATE -	REVISED -	

STATE OF ILLINOIS
DEPARTMENT OF TRANSPORTATION

IL ROUTE 2 (N. MAIN STREET)
SANITARY SEWER SHEETS

SCALE: 1" = 20' | SHEET 17 OF 29 SHEETS | STA. 624+00 TO STA. 630+00

F.A. RTE.	SECTION	COUNTY	TOTAL SHEETS	SHEET NO.
734	78R-2	WINNEBAGO	926	555

CONTRACT NO. 64C21

ILLINOIS FED. AID PROJECT

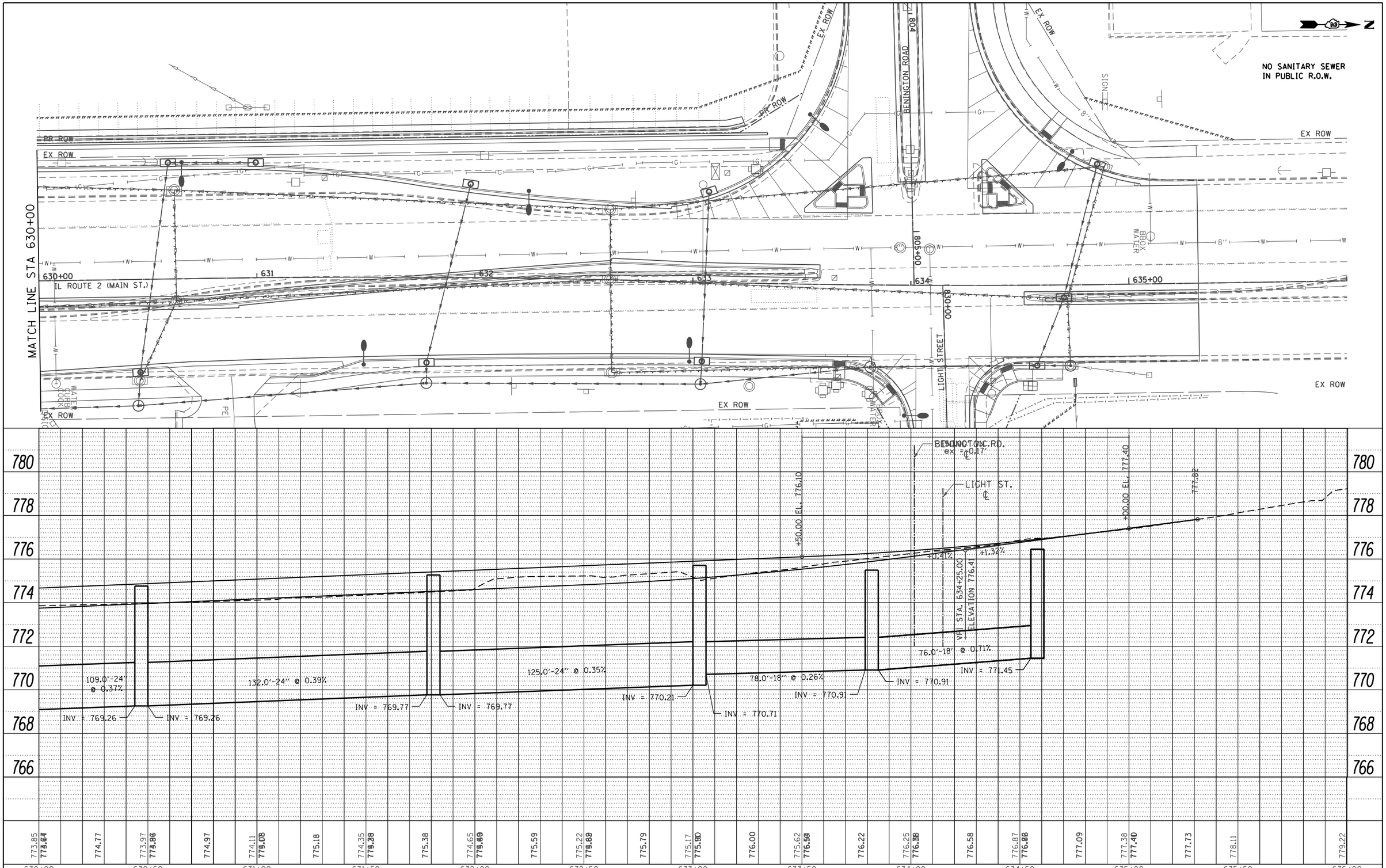

PLAN	BY	DATE
SURVEYED		
PLOTTED		
ALIGNMENT CHECKED		
RT. OF WAY CHECKED		
CADD FILE NAME		
NOTE BOOK NO.		

PROFILE	BY	DATE
SURVEYED		
PLOTTED		
GRADES CHECKED		
BM. NOTED		
STRUCTURE NOTATNS CHKD		
NOTE BOOK NO.		

COMPANY NAME: $COMPANY_NAME$
PROJECT CONTACT: $PROJECT_CONTACT$
CREATED BY: $CREATOR$ $TIME$
DATE PLOTTED: $DATE$
FILE NAME: $FILES$
PLOT DRIVER: PLT_DRV
PEN TABLE: PEN_TABLE

USER NAME = DSTANCZ	DESIGNED -	REVISED -	
	DRAWN -	REVISED -	
PLOT SCALE = $SCALE$	CHECKED -	REVISED -	
PLOT DATE = 7/28/2014	DATE -	REVISED -	

STATE OF ILLINOIS
DEPARTMENT OF TRANSPORTATION

IL ROUTE 2 (N. MAIN STREET)
SANITARY SEWER SHEETS

SCALE: 1" = 20' | SHEET 18 OF 29 SHEETS | STA. 630+00 TO STA. 636+00

F.A. RTE.	SECTION	COUNTY	TOTAL SHEETS	SHEET NO.
734	78R-2	WINNEBAGO	926	556

CONTRACT NO. 64C21

ILLINOIS FED. AID PROJECT

206'-10" VCP
SANITARY SEWER
@ 0.10%
TO SANITARY MH 071-151
RIM= 742.27
INV= 731.27

SANITARY CLEANOUT
COMPLETE 6" PVC

REMOVE AND REPLACE SANITARY MH 071-018
4' DIA.
RIM= 743.30
INV-OUT= 730.80

353'-10" VCP
SANITARY SEWER
@ 0.24%
TO SANITARY MH 071-019
RIM= 741.63
INV= 731.63

PARKING LOT

BROWN AVENUE

SANITARY CLEANOUT
COMPLETE 6" PVC

ABANDON
SANITARY MH 071-011

REMOVE AND REPLACE
SANITARY MH 071-017
4' DIA.
RIM= 743.52
INV= 730.84

313'-10" VCP
SANITARY SEWER
@ 0.17%

SANITARY SERVICE
COMPLETE 6" PVC

NEW CUT-IN
CONNECTION

SCALE IN FEET

SANITARY SERVICE
COMPLETE 6" PVC

350'-10" VCP
SANITARY SEWER
@ 0.17%
TO SANITARY MH 071-029
RIM= 741.80
INV= 732.30

REMOVE AND REPLACE SANITARY MH 071-024
4' DIA.
RIM= 742.54
INV-OUT= 731.30

359'-10" VCP
SANITARY SEWER
@ 0.24%
TO SANITARY MH 071-023
RIM= 740.33
INV= 732.24

VAN WIE AVENUE

NEW CUT IN
CONNECTION

SANITARY SERVICE
COMPLETE 6" PVC

150'-10" VCP
SANITARY SEWER
@ 0.10%
TO SANITARY MH 071-151
RIM= 742.27
INV= 731.27

IL RTE 2
(MAIN ST.)

VPI STA. 138+57.00
ELEVATION 742.49

VPI STA. 139+56.89
ELEVATION 742.79

VPI STA. 139+84.83
ELEVATION 743.33

VPI STA. 140+00.00
ELEVATION 743.34

VPI STA. 140+06.09
ELEVATION 743.45

VPI STA. 140+28.41
ELEVATION 743.00

VPI STA. 140+68.82
ELEVATION 742.88

VPI STA. 159+54.24
ELEVATION 742.08

VPI STA. 159+76.27
ELEVATION 742.53

VPI STA. 159+88.28
ELEVATION 742.77

VPI STA. 160+10.31
ELEVATION 742.34

VPI STA. 160+50.00
ELEVATION 741.81

VPI STA. 160+87.50
ELEVATION 742.00

742.02 | 742.44 | 742.79 | 743.10 | 743.20 **743.34** | 742.99 **742.94** | 740.58 **740.58** | 740.91 **741.00** | 741.23 **742.02** | 741.77 **742.54** | 741.82 **741.98** | 742.07

138+00 | 138+50 | 139+00 | 139+50 | 140+00 | 140+50 | 158+50 | 159+00 | 159+50 | 160+00 | 160+50 | 161+00

PLAN		BY	DATE
SURVEYED			
PLOTTED			
ALIGNMENT CHECKED			
RT. OF WAY CHECKED			
CADD FILE NAME			
NOTE BOOK NO.			

PROFILE		BY	DATE
SURVEYED			
PLOTTED			
GRADES CHECKED			
B.M. NOTED			
STRUCTURE NOTATNS CHKD			
NOTE BOOK NO.			

COMPANY NAME: $COMPANY_NAME$
PROJECT CONTACT: $PROJECT_CONTACT$
CLIENT: $CLIENT$
DATE PLOTTED: $DATE$ $TIME$
FILE NAME: $FILE$
PLOT DRIVER: PL_T_DRV
PEN TABLE: PEN_TABLE

USER NAME = DSTANCZ	DESIGNED -	REVISED -
	DRAWN -	REVISED -
PLOT SCALE = $SCALE$	CHECKED -	REVISED -
PLOT DATE = 7/28/2014	DATE -	REVISED -

STATE OF ILLINOIS
DEPARTMENT OF TRANSPORTATION

BROWN AVENUE & VAN WIE AVENUE
SANITARY SEWER SHEETS

SCALE: 1" = 20' | SHEET 19 OF 29 SHEETS | STA. TO STA.

F.A. RTE.	SECTION	COUNTY	TOTAL SHEETS	SHEET NO.
734	78R-2	WINNEBAGO	926	557
		CONTRACT NO. 64C21		
		ILLINOIS FED. AID PROJECT		

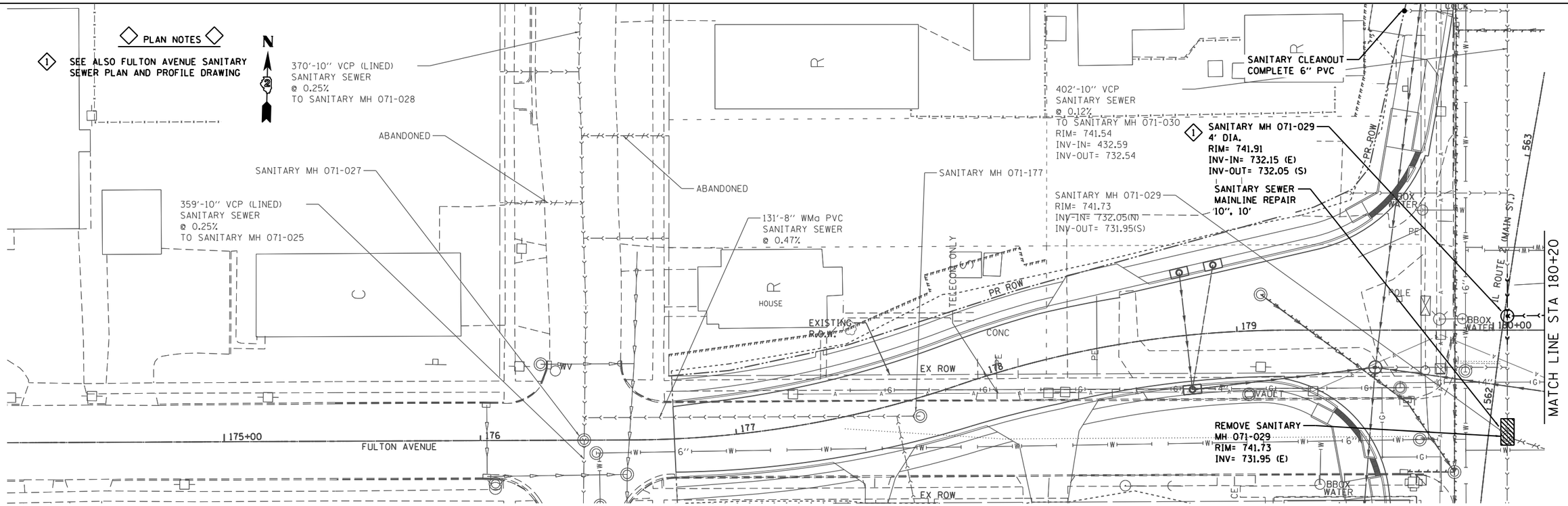

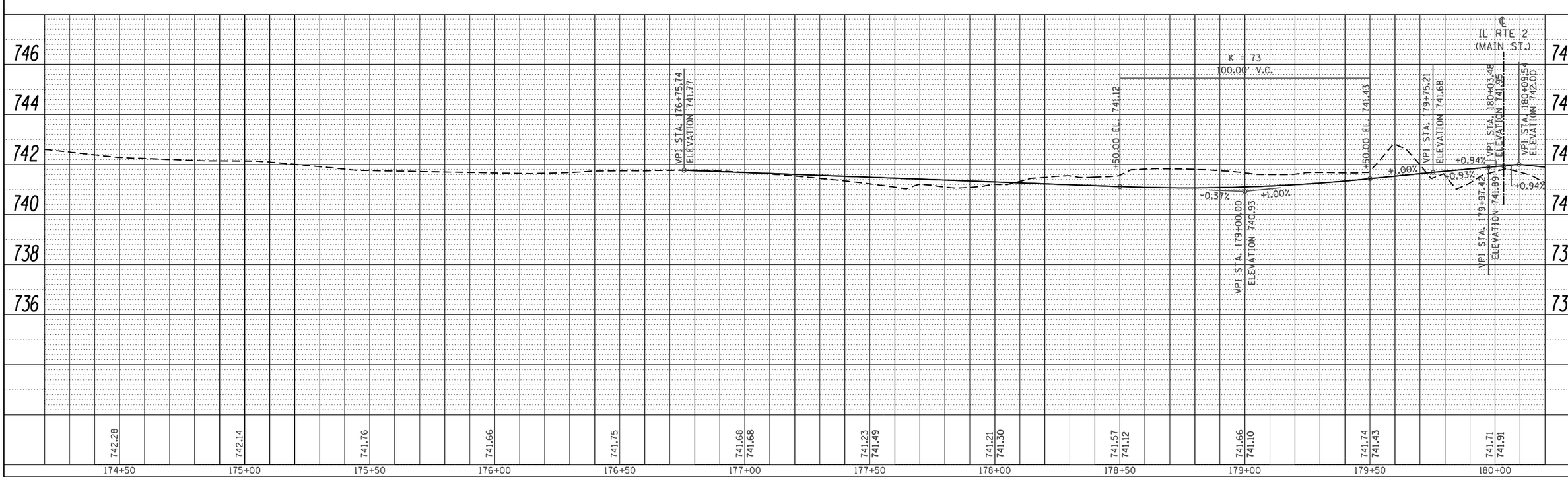

PLAN	BY	DATE
SURVEYED		
PLOTTED		
ALIGNMENT CHECKED		
RT. OF WAY CHECKED		
CADD FILE NAME		
NOTE BOOK NO.		

PROFILE	BY	DATE
SURVEYED		
PLOTTED		
GRADES CHECKED		
B.M. NOTED		
STRUCTURE NOTAT'NS CHK'D		
NOTE BOOK NO.		

COMPANY NAME: $COMPANY_NAME$
PROJECT CONTACT: $PROJECT_CONTACT$
COUNTY: $COUNTY$
DATE PLOTTED: $DATE$ $TIME$
FILE NAME: $FILES$
PLOT DRIVER: PLT_DRV
PEN TABLE: PEN_TABLE

USER NAME = DSTANCZ	DESIGNED -	REVISED -
	DRAWN -	REVISED -
PLOT SCALE = $SCALE$	CHECKED -	REVISED -
PLOT DATE = 7/28/2014	DATE -	REVISED -

STATE OF ILLINOIS
DEPARTMENT OF TRANSPORTATION

FULTON AVENUE (1 OF 2)
SANITARY SEWER SHEETS

SCALE: 1" = 20' | SHEET 20 OF 29 SHEETS | STA. 176+75.74 TO STA. 180+20

F.A. RTE.	SECTION	COUNTY	TOTAL SHEETS	SHEET NO.
734	78R-2	WINNEBAGO	926	558

CONTRACT NO. 64C21

ILLINOIS FED. AID PROJECT

PLAN NOTES

1. CONTRACTOR SHALL ENSURE 18" VERTICAL SEPARATION BETWEEN PROPOSED SANITARY SERVICE AND WATER MAIN
2. SEE ALSO FULTON AVENUE SANITARY SEWER PLAN AND PROFILE DRAWING

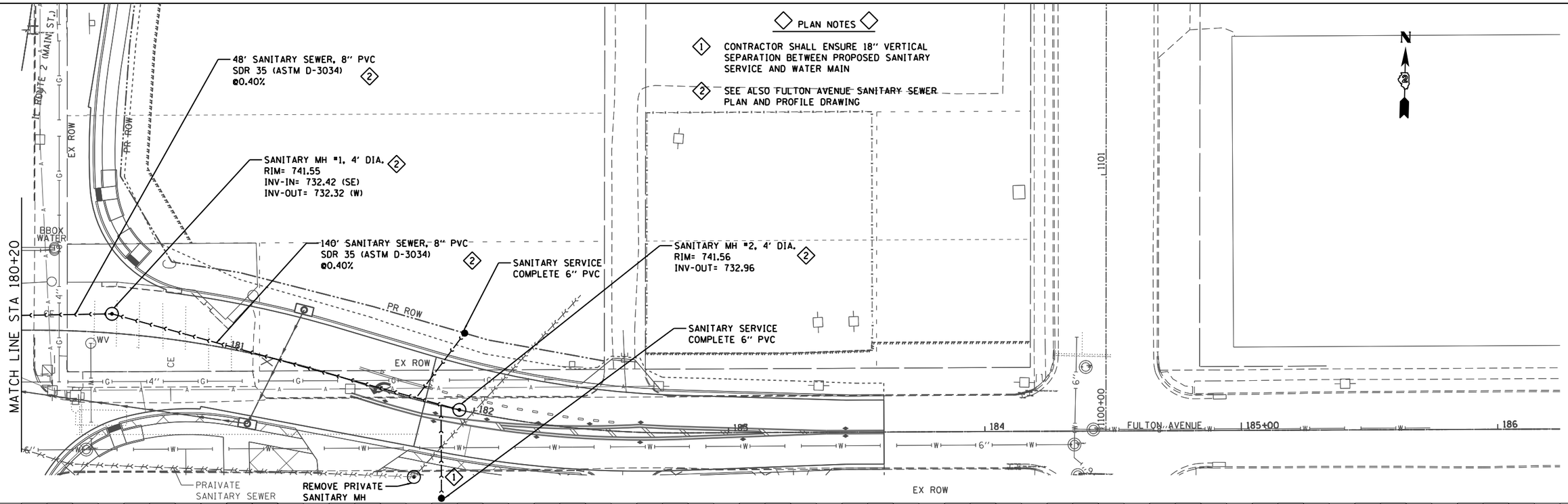

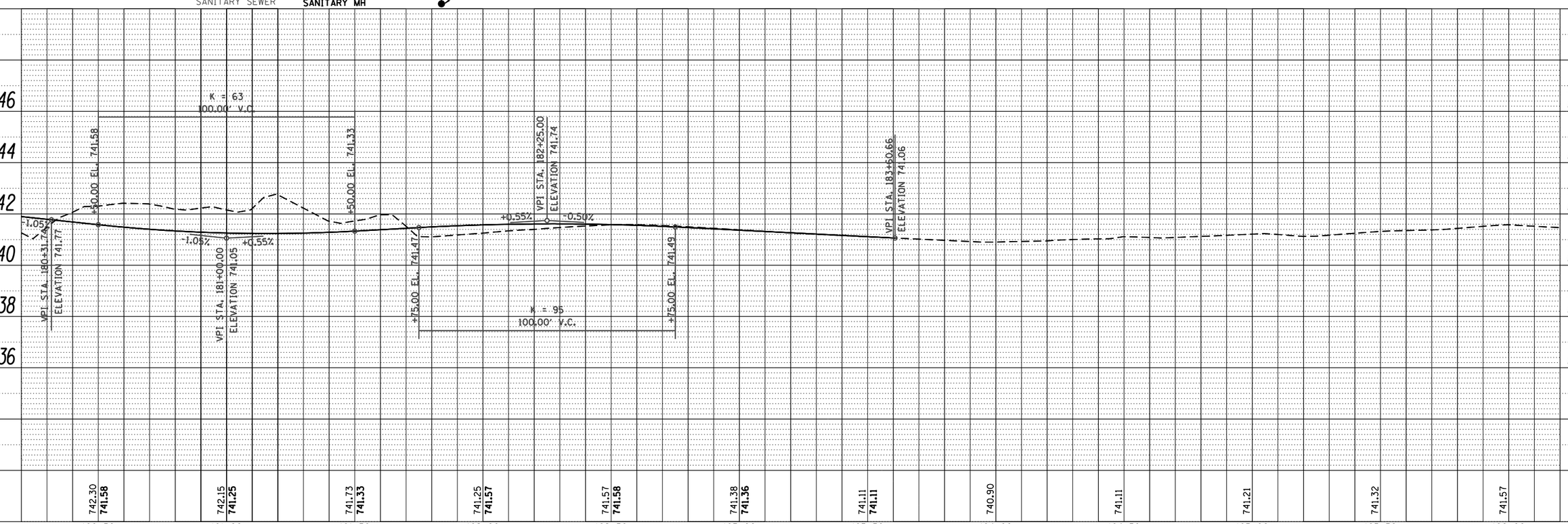

PLAN	BY	DATE
SURVEYED		
PLOTTED		
ALIGNMENT CHECKED		
RT. OF WAY CHECKED		
CADD FILE NAME		
NOTE BOOK NO.		

PROFILE	BY	DATE
SURVEYED		
PLOTTED		
GRADES CHECKED		
BM. NOTED		
STRUCTURE NOTATNS CHKD		
NOTE BOOK NO.		

COMPANY NAME: $COMPANY_NAME$
PROJECT CONTACT: $PROJECT_CONTACT$
CLIENT: $CLIENT$ $TIME$
DATE PLOTTED: $DATE$
FILE NAME: $FILES$
PLOT DRIVER: PLT_DRV
PEN TABLE: PEN_TABLE

USER NAME = DSTANCZ	DESIGNED -	REVISED -
	DRAWN -	REVISED -
PLOT SCALE = $SCALE$	CHECKED -	REVISED -
PLOT DATE = 7/28/2014	DATE -	REVISED -

STATE OF ILLINOIS
DEPARTMENT OF TRANSPORTATION

FULTON AVENUE (2 OF 2)
SANITARY SEWER SHEETS

SCALE: 1" = 20' | SHEET 21 OF 29 SHEETS | STA. 180+20 TO STA. 183+60.66

F.A. RTE.	SECTION	COUNTY	TOTAL SHEETS	SHEET NO.
734	78R-2	WINNEBAGO	926	559

CONTRACT NO. 64C21

ILLINOIS FED. AID PROJECT

PLAN NOTES

1. CONTRACTOR SHALL ENSURE 18" VERTICAL SEPARATION BETWEEN PROPOSED SANITARY SERVICE AND PROPOSED STORM SEWER

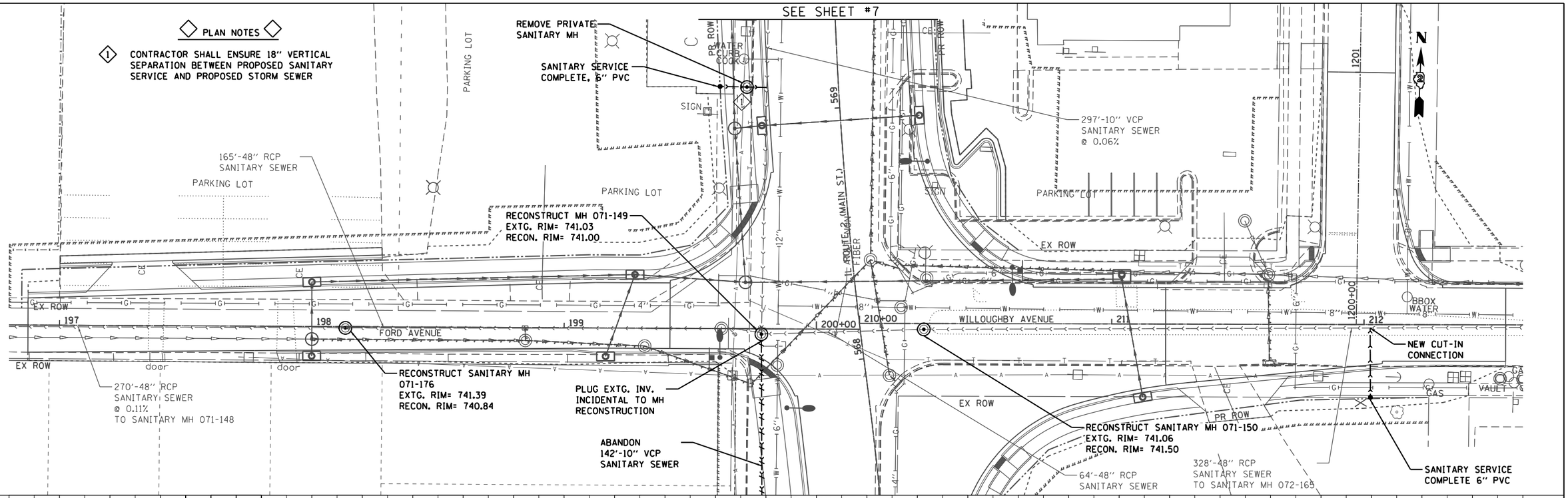

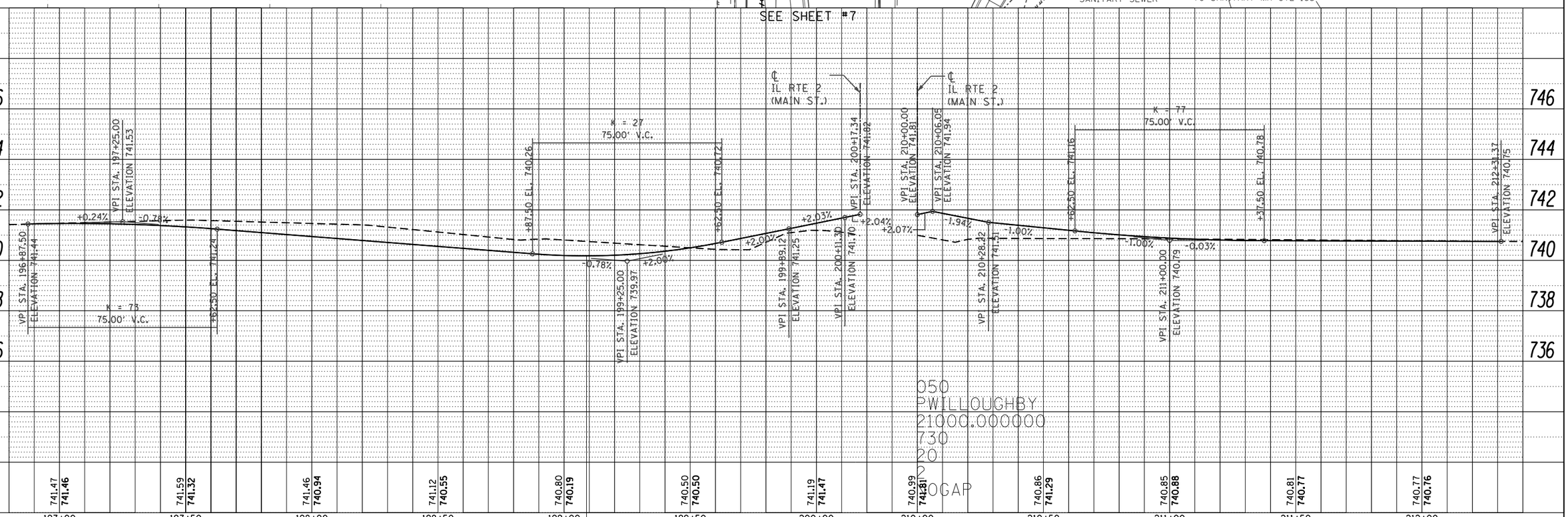

PLAN	BY	DATE
SURVEYED		
PLOTTED		
ALIGNMENT CHECKED		
RT. OF WAY CHECKED		
CADD FILE NAME		
NOTE BOOK NO.		

PROFILE	BY	DATE
SURVEYED		
PLOTTED		
GRADES CHECKED		
BM. NOTED		
STRUCTURE NOTATNS CHKD		
NOTE BOOK NO.		

COMPANY NAME: $COMPANY_NAME$
PROJECT CONTACT: $PROJECT_CONTACT$
CELL CONTACT: $CELL_CONTACT$
DATE PLOTTED: $DATE$ $TIME$
FILE NAME: $FILES$
PLOT DRIVER: PLT_DRV
PEN TABLE: PEN_TABLE

USER NAME = DSTANCZ	DESIGNED -	REVISED -	
	DRAWN -	REVISED -	
PLOT SCALE = $SCALE$	CHECKED -	REVISED -	
PLOT DATE = 7/28/2014	DATE -	REVISED -	

STATE OF ILLINOIS
DEPARTMENT OF TRANSPORTATION

FORD AVENUE /WILLOUGHBY AVENUE
SANITARY SEWER SHEETS

SCALE: 1" = 20' | SHEET 22 OF 29 SHEETS | STA. 196+87.50 TO STA. 212+31.37

F.A. RTE.	SECTION	COUNTY	TOTAL SHEETS	SHEET NO.
734	78R-2	WINNEBAGO	926	560

CONTRACT NO. 64C21

ILLINOIS FED. AID PROJECT

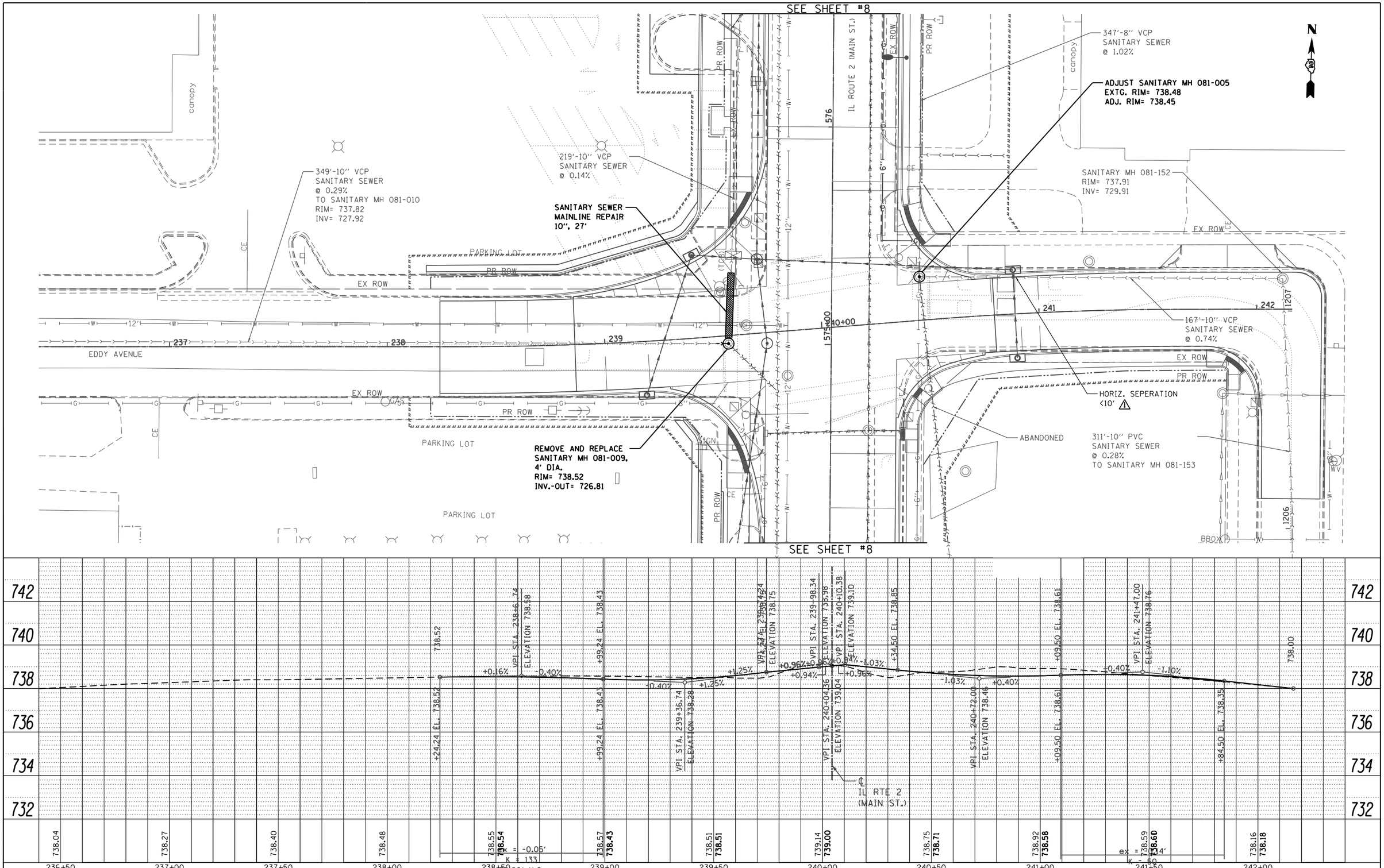
SEE SHEET #8
N
canopy
349'-10" VCP
SANITARY SEWER
@ 0.29%
TO SANITARY MH 081-010
RIM= 737.82
INV= 727.92
219'-10" VCP
SANITARY SEWER
@ 0.14%
SANITARY SEWER
MAINLINE REPAIR
10", 27'
PARKING LOT
PR ROW
EX ROW
EDDY AVENUE
REMOVE AND REPLACE
SANITARY MH 081-009,
4' DIA.
RIM= 738.52
INV.-OUT= 726.81
IL ROUTE 2 (MAIN ST.)
347'-8" VCP
SANITARY SEWER
@ 1.02%
ADJUST SANITARY MH 081-005
EXTG. RIM= 738.48
ADJ. RIM= 738.45
SANITARY MH 081-152
RIM= 737.91
INV= 729.91
167'-10" VCP
SANITARY SEWER
@ 0.74%
HORIZ. SEPERATION
<10'
ABANDONED
311'-10" PVC
SANITARY SEWER
@ 0.28%
TO SANITARY MH 081-153
BBOX
PLAN
PROFILE
SURVEYED
PLOTTED
ALIGNMENT CHECKED
RT. OF WAY CHECKED
CADD FILE NAME
NOTE BOOK
NO.
BY
DATE
STRUCTURE NOTATNS CHKD
742
740
738
736
734
732
738.52
+24.24 EL. 738.52
VPI STA. 238+61.74
ELEVATION 738.58
+0.16%
-0.40%
+99.24 EL. 738.43
VPI STA. 239+36.74
ELEVATION 738.28
+1.25%
VPI STA. 239+98.34
ELEVATION 738.75
+0.96%
+0.94%
VPI STA. 240+04.36
ELEVATION 739.04
VPI STA. 240+10.38
ELEVATION 739.10
+34.50 EL. 738.85
-1.03%
VPI STA. 240+72.00
ELEVATION 738.46
+09.50 EL. 738.61
+0.40%
VPI STA. 241+47.00
ELEVATION 738.76
-1.10%
+84.50 EL. 738.35
738.00
℄ IL RTE 2
(MAIN ST.)
738.04
738.27
738.40
738.48
738.55 738.54
K = -0.05'
K = 133
200' V.C.
738.57 738.43
738.51 738.51
739.14 739.00
738.75 738.71
738.92 738.58
738.59 738.60
ex = 0.4'
K = 50
75.00' V.C.
738.16 738.18
236+50
237+00
237+50
238+00
238+50
239+00
239+50
240+00
240+50
241+00
241+50
242+00
COMPANY NAME: $COMPANY_NAME$
PROJECT CONTACT: $PROJECT_CONTACT$
CREATED BY: $CREATOR$
DATE PLOTTED: $DATE$ $TIME$
FILE NAME: $FILE$
PLOT DRIVER: PLT_DRV
PEN TABLE: PEN_TABLE
USER NAME = DSTANCZ
PLOT SCALE = $SCALE$
PLOT DATE = 7/28/2014
DESIGNED -
DRAWN -
CHECKED -
DATE -
REVISED -
STATE OF ILLINOIS
DEPARTMENT OF TRANSPORTATION
EDDY AVENUE
SANITARY SEWER SHEETS
SCALE: 1" = 20'
SHEET 23 OF 29 SHEETS
STA. TO STA.
F.A. RTE. 734
SECTION 78R-2
COUNTY WINNEBAGO
TOTAL SHEETS 926
SHEET NO. 561
CONTRACT NO. 64C21
ILLINOIS FED. AID PROJECT

SEE SHEET #14

TO SANITARY MH 089-003

REMOVE & REPLACE
SANITARY MH 089-002, 4' DIA.
RIM= 754.75
INV.-OUT= 745.67

54'-6" VCP
SANITARY SEWER

EX ROW

NEW WYE
CONNECTION

HALSTED ROAD

7' MIN.

REMOVE SANITARY
MH 089-110

195.5'-8" VCP
SANITARY SEWER
@ 0.40%
TO SANITARY
MH 089-002A
RIM= 754.48

SANITARY SEWER
MAIN LINE REPAIR
8", 9'

SANITARY SERVICE COMPLETE,
6" PVC

GAS PUMP

CANOPY

GAS PUMP

CONC

IL ROUTE 2 (MAIN ST.)

SANITARY MH 089-104, 4' DIA.
W/TYPE 1 FRAME, CLOSED LID
RIM= 753.58
INV.-OUT= 744.12

DO NOT REINSTATE

ABANDONED

177'-8" VCP
SANITARY SEWER
@ 0.40%
TO SANITARY
MH 081-103

NEW WYE CONNECTION

REMOVE SANITARY
MH 089-104
RIM= 753.79
INV= 744.09

SANITARY SERVICE COMPLETE,
6" PVC

DO NOT REINSTATE

PARKING LOT

CANOPY

337 338 339 340+00 341 342

608 607

SEE SHEET #14

℄
IL RTE 2
(MAIN ST.)

K = 95
100.00' V.C.

VPI STA. 338+08.40
ELEVATION 755.18

VPI STA. 339+70.00
ELEVATION 755.75

VPI STA. 339+94.00
ELEVATION 755.99

VPI STA. 340+00.00
ELEVATION 756.05

VPI STA. 340+06.00
ELEVATION 756.11

VPI STA. 340+30.00
ELEVATION 755.87

+75.00 EL. 754.97

VPI STA. 341+25.00
ELEVATION 753.97

+75.00 EL. 753.50

VPI STA. 341+77.53
ELEVATION 753.47

+0.35% -1.00% +1.00% -1.00% +1.00% -2.00% -2.00% -0.95%

760 758 756 754 752 750

755.03 755.16 755.30 **755.32** 755.38 **755.50** 755.39 **755.68** 756.14 **756.05** 754.94 **755.47** 754.12 **754.50** 753.75 **753.77** 753.22 752.68

337+50 338+00 338+50 339+00 339+50 340+00 340+50 341+00 341+50 342+00 342+50

PLAN
SURVEYED
PLOTTED
ALIGNMENT CHECKED
RT. OF WAY CHECKED
CADD FILE NAME
NOTE BOOK NO.
BY DATE

PROFILE
SURVEYED
PLOTTED
GRADES CHECKED
BLM. NOTED
STRUCTURE NOTATNS CH'KD
NOTE BOOK NO.
BY DATE

COMPANY NAME: $COMPANY_NAME$
PROJECT CONTACT: $PROJECT_CONTACT$
CLIENT: $CLIENT$ $TIME$
DATE PLOTTED: $DATE$
FILE NAME: $FILES$
PLOT DRIVER: PLT_DRV
PEN TABLE: PEN_TABLE

USER NAME = DSTANCZ	DESIGNED -	REVISED -
	DRAWN -	REVISED -
PLOT SCALE = $SCALE$	CHECKED -	REVISED -
PLOT DATE = 7/28/2014	DATE -	REVISED -

STATE OF ILLINOIS
DEPARTMENT OF TRANSPORTATION

HALSTED ROAD
SANITARY SEWER SHEETS

SCALE: 1" = 20' | SHEET 24 OF 29 SHEETS | STA. TO STA.

F.A. RTE.	SECTION	COUNTY	TOTAL SHEETS	SHEET NO.
734	78R-2	WINNEBAGO	926	562

CONTRACT NO. 64C21

ILLINOIS FED. AID PROJECT

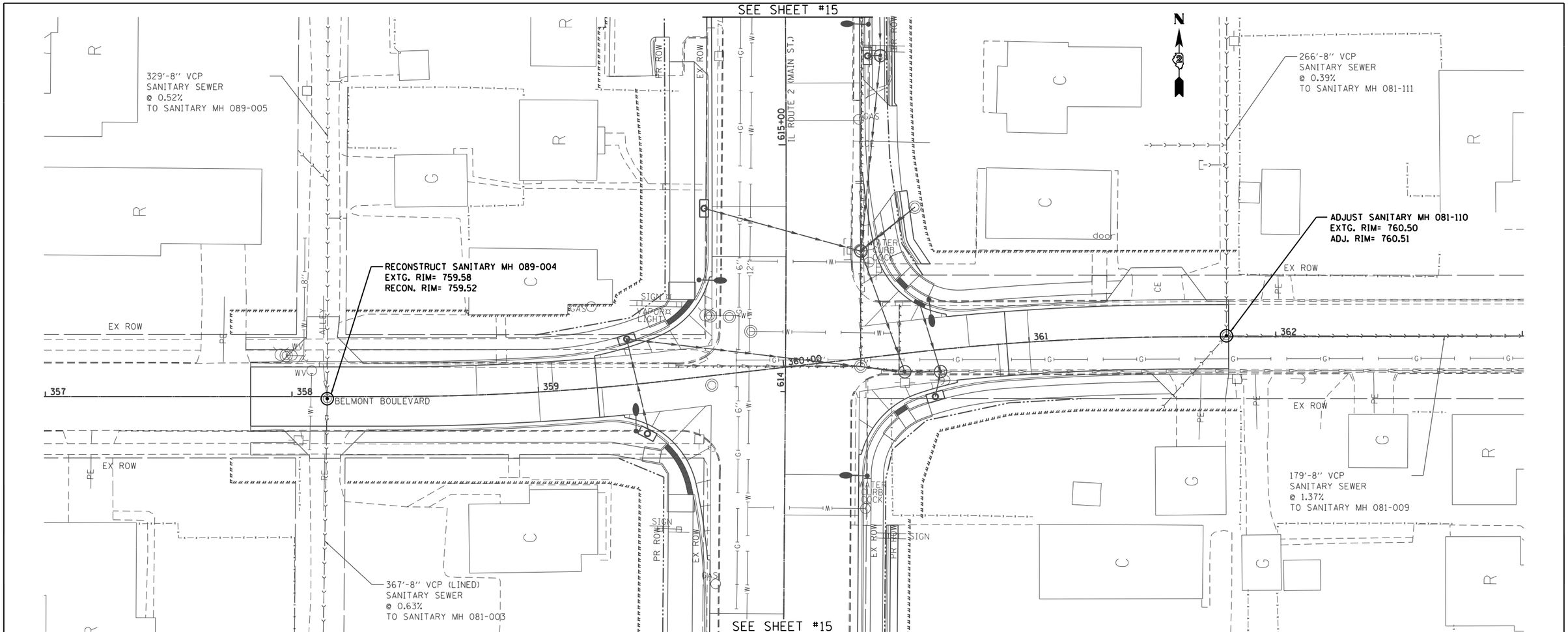

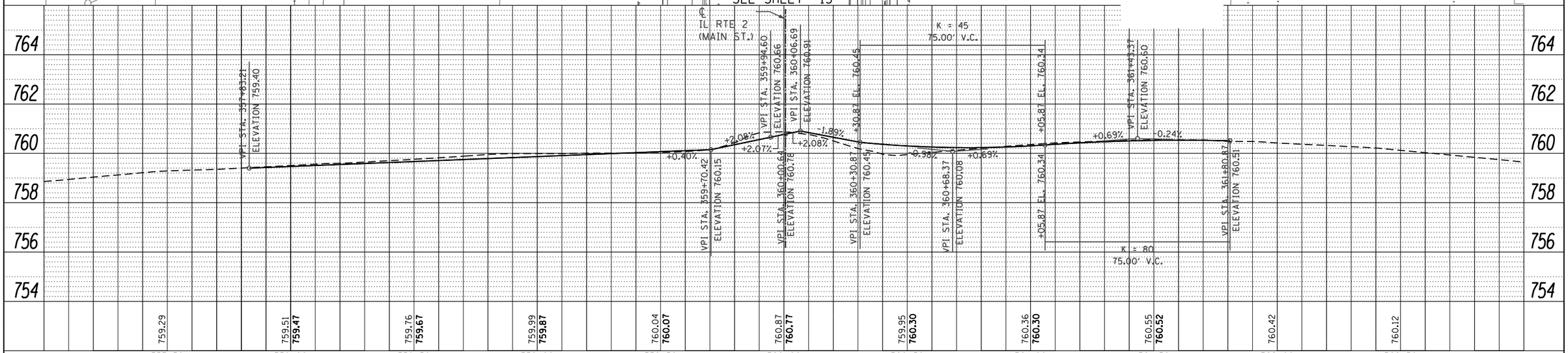

PLAN	BY	DATE
SURVEYED		
PLOTTED		
ALIGNMENT CHECKED		
RT. OF WAY CHECKED		
CADD FILE NAME		
NOTE BOOK NO.		

PROFILE	BY	DATE
SURVEYED		
PLOTTED		
GRADES CHECKED		
B.M. NOTED		
STRUCTURE NOTAT'NS CH'KD		
NOTE BOOK NO.		

COMPANY NAME: $COMPANY_NAME$
PROJECT CONTACT: $PROJECT_CONTACT$
CLIENT: $CLIENT$
DATE PLOTTED: $DATE$ $TIME$
FILE NAME: $FILE$
PLOT DRIVER: PL_T_DRV
PEN TABLE: PEN_TABLE

USER NAME = DSTANCZ	DESIGNED -	REVISED -	
	DRAWN -	REVISED -	
PLOT SCALE = $SCALE$	CHECKED -	REVISED -	
PLOT DATE = 7/28/2014	DATE -	REVISED -	

STATE OF ILLINOIS
DEPARTMENT OF TRANSPORTATION

BELMONT BOULEVARD
SANITARY SEWER SHEETS

SCALE: 1" = 20' | SHEET 25 OF 29 SHEETS | STA. TO STA.

F.A. RTE.	SECTION	COUNTY	TOTAL SHEETS	SHEET NO.
734	78R-2	WINNEBAGO	926	563
		CONTRACT NO. 64C21		
		ILLINOIS FED. AID PROJECT		

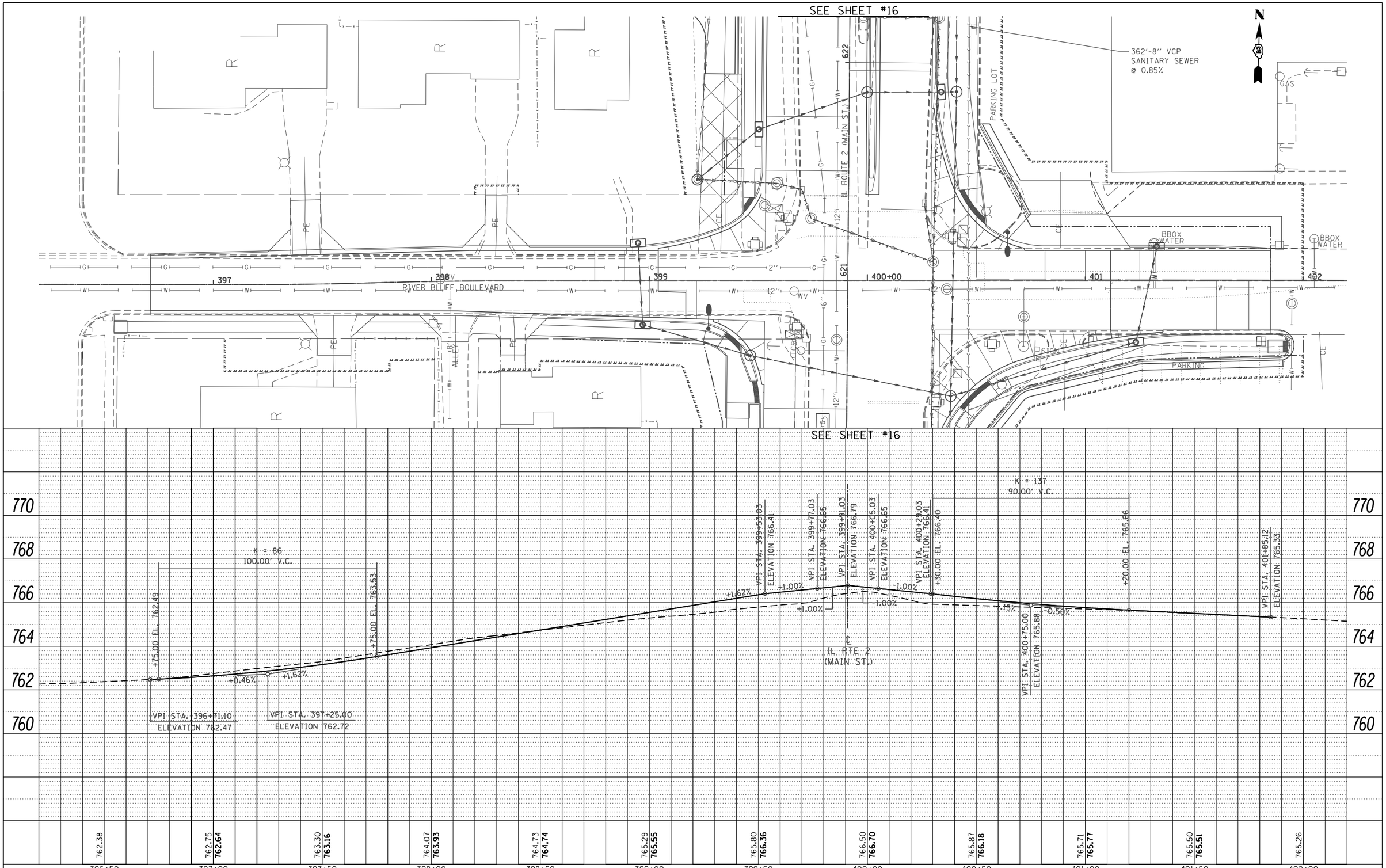

PLAN	BY	DATE
SURVEYED		
PLOTTED		
ALIGNMENT CHECKED		
RT. OF WAY CHECKED		
CADD FILE NAME		
NOTE BOOK NO.		

PROFILE	BY	DATE
SURVEYED		
PLOTTED		
GRADES CHECKED		
B.M. NOTED		
STRUCTURE NOTAT'NS CHK'D		
NOTE BOOK NO.		

COMPANY NAME: $COMPANY_NAME$
PROJECT CONTACT: $PROJECT_CONTACT$
COUNTY: $COUNTY$
DATE PLOTTED: $DATE$ $TIME$
FILE NAME: $FILE$
PLOT DRIVER: PLT_DRV
PEN TABLE: PEN_TABLE

USER NAME = DSTANCZ	DESIGNED -	REVISED -
	DRAWN -	REVISED -
PLOT SCALE = $SCALE$	CHECKED -	REVISED -
PLOT DATE = 7/28/2014	DATE -	REVISED -

STATE OF ILLINOIS
DEPARTMENT OF TRANSPORTATION

RIVER BLUFF BOULEVARD
SANITARY SEWER SHEETS

SCALE: 1" = 20' | SHEET 26 OF 29 SHEETS | STA. 396+71.10 TO STA. 401+85.12

F.A. RTE.	SECTION	COUNTY	TOTAL SHEETS	SHEET NO.
734	78R-2	WINNEBAGO	926	564

CONTRACT NO. 64C21

ILLINOIS FED. AID PROJECT

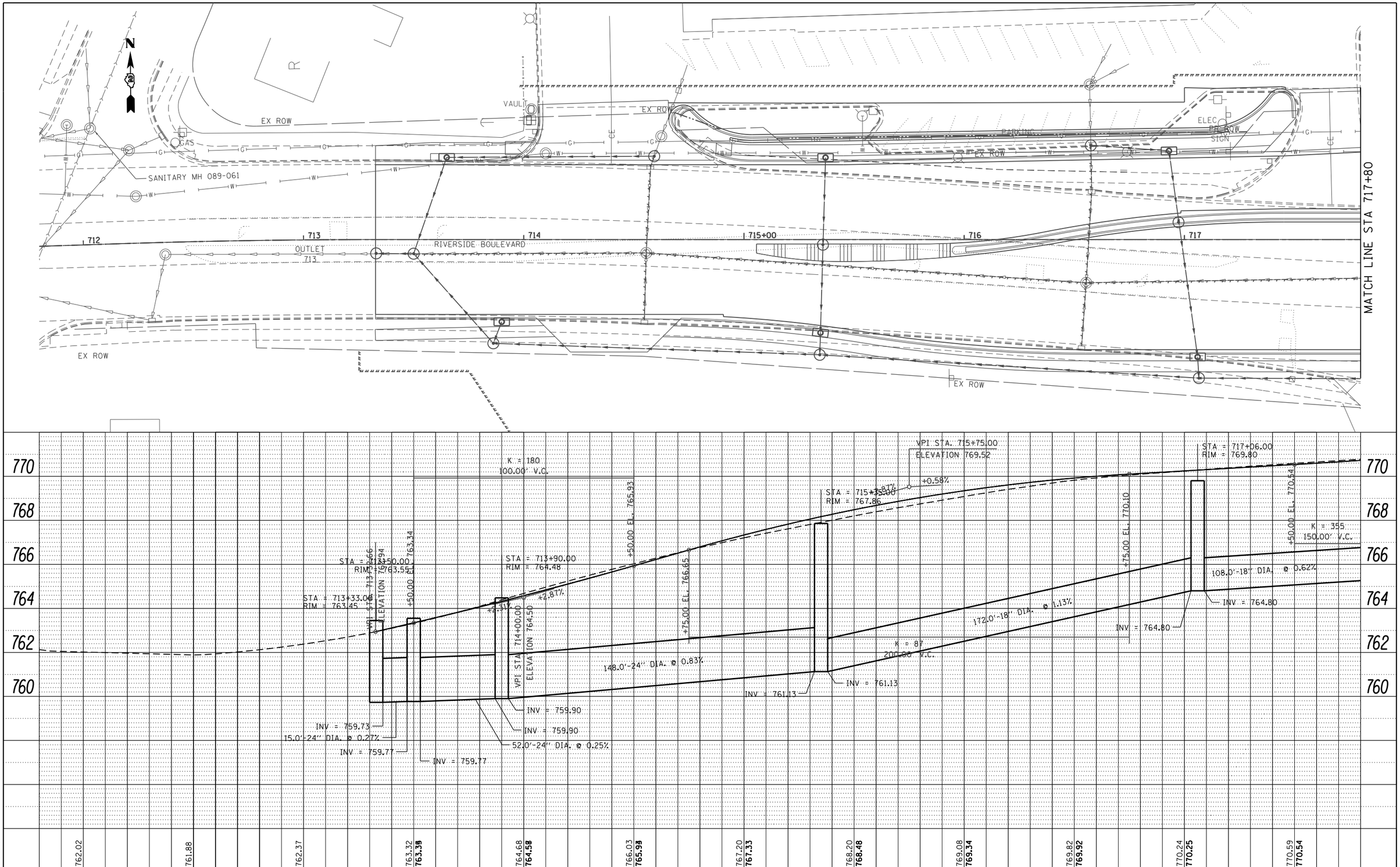

PLAN
NOTE BOOK NO.
SURVEYED
PLOTTED
ALIGNMENT CHECKED
RT. OF WAY CHECKED
CADD FILE NAME
BY
DATE

PROFILE
NOTE BOOK NO.
SURVEYED
PLOTTED
GRADES CHECKED
B.M. NOTED
STRUCTURE NOTATNS CHKD
BY
DATE

COMPANY NAME: $COMPANY_NAME$
PROJECT CONTACT: $PROJECT_CONTACT$
CLIENT: $CLIENT$
DATE PLOTTED: $DATE$ $TIME$
FILE NAME: $FILE$
PLOT DRIVER: PL_T_DRV
PEN TABLE: PEN_TABLE

USER NAME = DSTANCZ	DESIGNED -	REVISED -	
	DRAWN -	REVISED -	
PLOT SCALE = $SCALE$	CHECKED -	REVISED -	
PLOT DATE = 7/28/2014	DATE -	REVISED -	

STATE OF ILLINOIS
DEPARTMENT OF TRANSPORTATION

RIVERSIDE BOULEVARD (1 OF 3)
SANITARY SEWER SHEETS

SCALE: 1" = 20' | SHEET 27 OF 29 SHEETS | STA. 713+32.66 TO STA. 717+80

F.A. RTE.	SECTION	COUNTY	TOTAL SHEETS	SHEET NO.
734	78R-2	WINNEBAGO	926	565

CONTRACT NO. 64C21

ILLINOIS FED. AID PROJECT

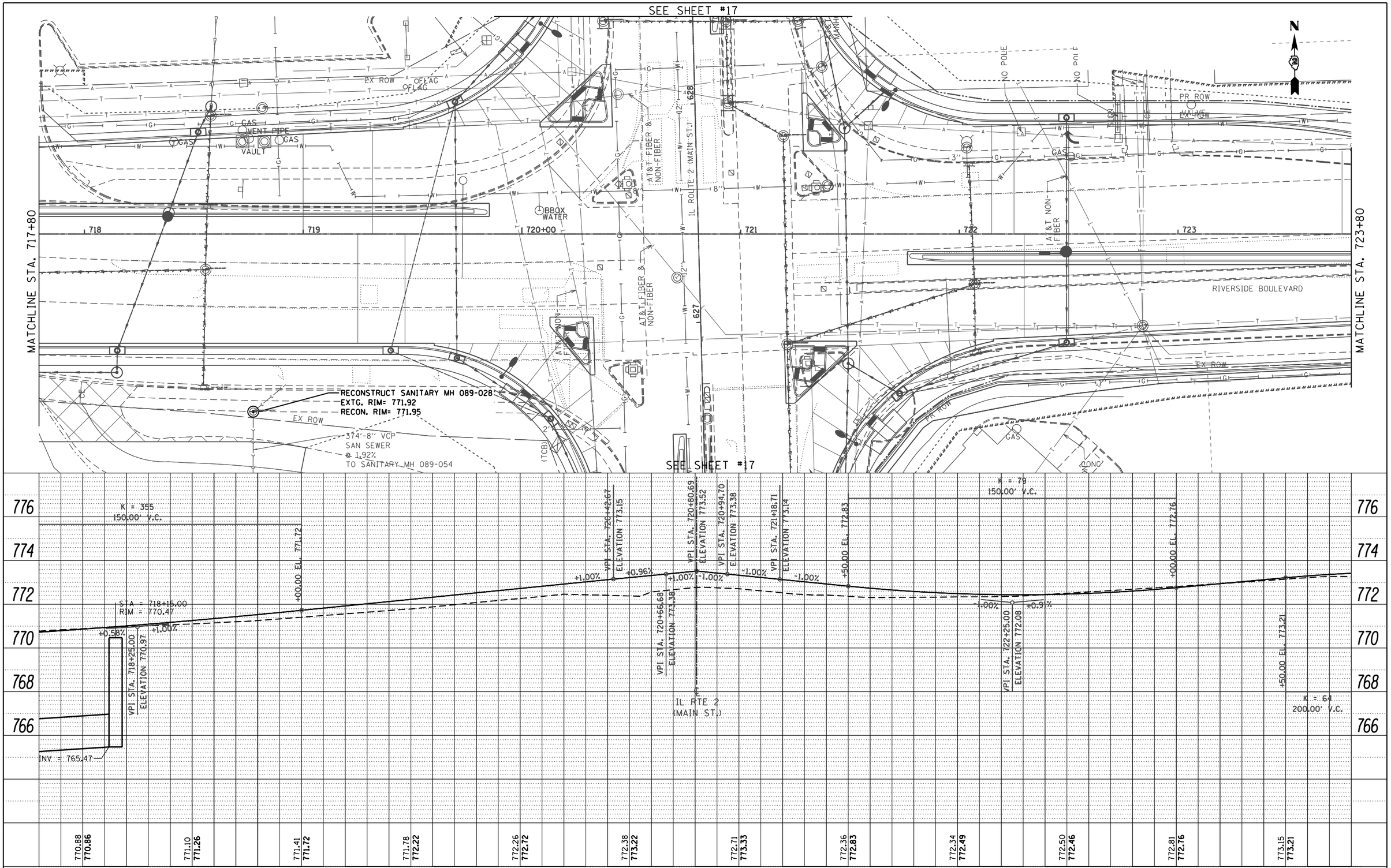

PLAN	BY	DATE
SURVEYED		
PLOTTED		
ALIGNMENT CHECKED		
RT. OF WAY CHECKED		
CADD FILE NAME		
NOTE BOOK NO.		

PROFILE	BY	DATE
SURVEYED		
PLOTTED		
GRADES CHECKED		
B.M. NOTED		
STRUCTURE NOTATNS CHKD		
NOTE BOOK NO.		

COMPANY NAME: $COMPANY_NAME$
PROJECT CONTACT: $PROJECT_CONTACT$
CREATED: $CREATOR$
DATE PLOTTED: $DATE$ $TIME$
FILE NAME: $FILE$
PLOT DRIVER: PLT_DRVR
PEN TABLE: PEN_TABLE

USER NAME = DSTANCZ	DESIGNED -	REVISED -	
	DRAWN -	REVISED -	
PLOT SCALE = $SCALE$	CHECKED -	REVISED -	
PLOT DATE = 7/28/2014	DATE -	REVISED -	

STATE OF ILLINOIS
DEPARTMENT OF TRANSPORTATION

RIVERSIDE BOULEVARD (2 OF 3)
DRAINAGE SHEETS

SCALE: 1" = 20' | SHEET 28 OF 29 SHEETS | STA. 717+80 TO STA. 723+80

F.A. RTE.	SECTION	COUNTY	TOTAL SHEETS	SHEET NO.
734	78R-2	WINNEBAGO	926	566

CONTRACT NO. 64C21

ILLINOIS FED. AID PROJECT

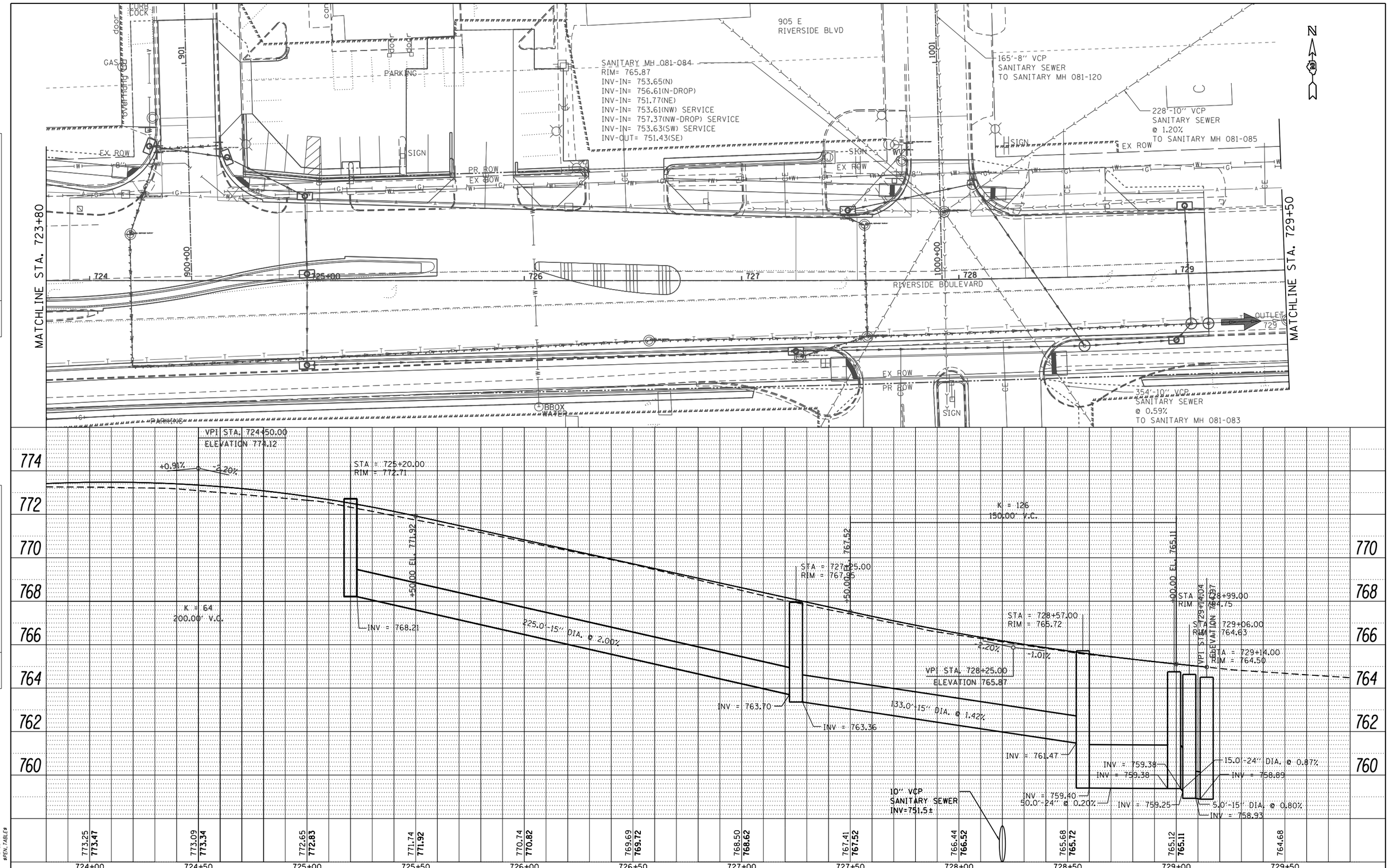

PLAN	BY	DATE
SURVEYED		
PLOTTED		
ALIGNMENT CHECKED		
RT. OF WAY CHECKED		
CADD FILE NAME		
NOTE BOOK NO.		

PROFILE	BY	DATE
SURVEYED		
PLOTTED		
GRADES CHECKED		
B.M. NOTED		
STRUCTURE NOTATNS CHKD		
NOTE BOOK NO.		

COMPANY NAME: $COMPANY_NAME$
PROJECT CONTACT: $PROJECT_CONTACT$
CREATED: $CREATOR$ $TIME$
DATE PLOTTED: $DATE$
FILE NAME: $FILES$
PLOT DRIVER: PL_DRV
PEN TABLE: PEN_TABLE

USER NAME = DSTANCZ	DESIGNED -	REVISED -	
	DRAWN -	REVISED -	
PLOT SCALE = $SCALE$	CHECKED -	REVISED -	
PLOT DATE = 7/28/2014	DATE -	REVISED -	

STATE OF ILLINOIS
DEPARTMENT OF TRANSPORTATION

RIVERSIDE BOULEVARD (3 OF 3)
DRAINAGE SHEETS

SCALE: 1" = 20' | SHEET 29 OF 29 SHEETS | STA. 723+80 TO STA. 729+50

F.A. RTE.	SECTION	COUNTY	TOTAL SHEETS	SHEET NO.
734	78R-2	WINNEBAGO	926	567

CONTRACT NO. 64C21

ILLINOIS FED. AID PROJECT

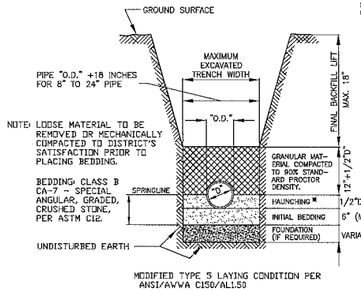

CLAY, RCP & DIP PIPE BEDDING DETAIL

CONTRACTOR SHALL USE REASONABLE CARE WHILE BACKFILLING OVER THE SEWER. NO MATERIALS SUCH AS ROCKS OR BOULDERS SHALL BE ALLOWED DIRECTLY ON THE SEWER PIPE UNLESS A MIN. OF 24" OF BACKFILL HAS BEEN PLACED ABOVE THE CROWN OF THE PIPE.

IN TRENCHES NOT REQUIRING SELECT TRENCH BACKFILL NO EXCAVATED MATERIAL LARGER THAN EIGHT INCHES (8") IN ANY DIMENSION SHALL BE USED IN THE BACKFILL.

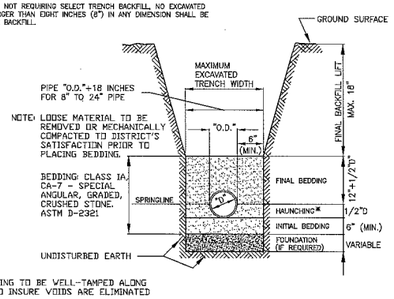

PVC PIPE BEDDING DETAIL

STONE RIP-RAP SHALL BE GRADATION RR4, (16" MIN. THICKNESS) WITH GRADATION RR4 BEDDING (6" MIN. THICKNESS) PER IDOT SECTION 281. RIP RAP TO BE IMMEDIATELY INSTALLED AFTER COMPLETION OF BACKFILLING AND SILT FENCE AFTER RIP RAP INSTALLATION.

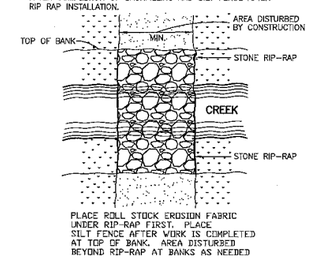

STONE RIP-RAP DETAIL

TYPICAL

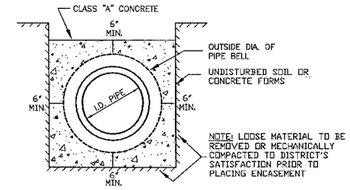

ENCASEMENT DETAIL

NOTE: THIS CONNECTION WILL REQUIRE DEFLECTION TESTING ON MAINLINE 30 DAYS (MINIMALLY) AFTER BACKFILLING IS COMPLETE.

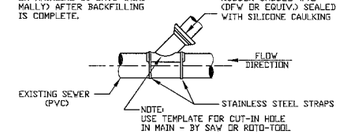

CUT-IN CONNECTION DETAIL (PVC PIPE)

PLAN VIEW

SEE SERVICE & SERVICE CLEANOUT RISER DETAIL

NOTE: CORE DRILL HOLE IN MAIN - DO NOT USE HAMMER, STAR DRILL, ETC.

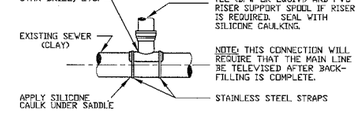

CUT-IN CONNECTION DETAIL (CLAY PIPE)

PROFILE VIEW

SEE SERVICE & SERVICE CLEANOUT RISER DETAIL

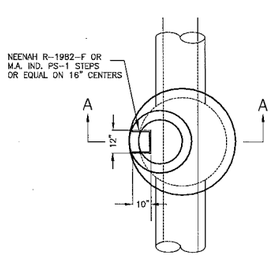

MANHOLE DETAIL - PLAN

NOTE: SEE STANDARD RISER DETAIL FOR UPPER PORTION OF RISER.

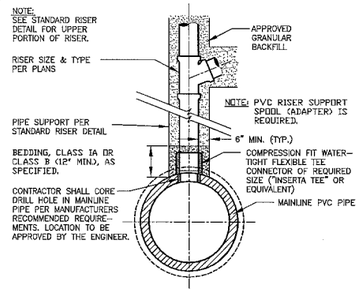

SERVICE CONNECTION FOR PVC TRUNK SEWER

FOR PIPE 18" IN DIA. OR LARGER

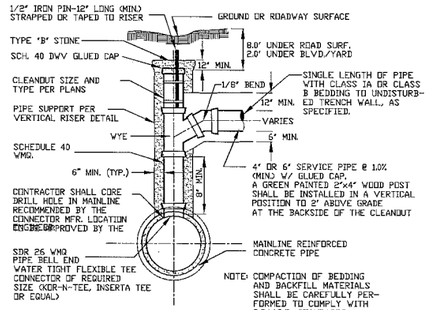

SERVICE CONNECTION DETAIL FOR RCP

NO SCALE

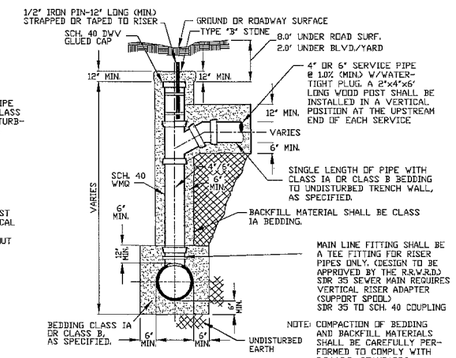

VERTICAL RISER DETAIL

SECTION A-A

NOTES:

MANHOLE FRAME AND COVER SHALL BE A NEENAH R-1670 OR EAST JORDAN E 1117 NON-ROCKING-SELF-SEALING LID OR EQUAL UNLESS OTHERWISE NOTED

THE LID SHALL HAVE 2" HIGH "SANITARY" LETTERING AND A CONCEALED PICK HOLE.

ALL ADJUSTMENT RING JOINTS SHALL BE SEALED WITH (2) 1" BEADS OF E-Z STIK, KENT SEAL OR EQUIVALENT, INCLUDING CAST IRON FRAME TO CONCRETE MANHOLE STRUCTURE.

2" CONCRETE RINGS ALLOWED ONLY IN CITY OF ROCKFORD. ALL OTHER 2" RINGS MUST BE DISTRICT APPROVED (GNR TECHNOLOGIES, EAST JORDAN IRON WORKS) OR EQUAL RUBBER ADJUSTMENT RISER.

DISTRICT APPROVED EXTERNAL MANHOLE BARREL SECTION JOINT SEAL. (WET AREAS ONLY)

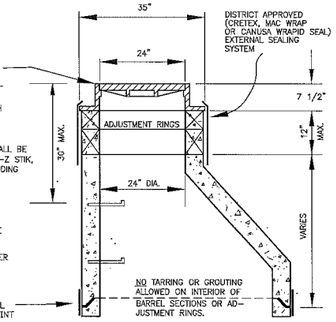

NOTES:

A MAXIMUM OF 12" MINIMUM OF 4" (NOT REQUIRED IN TURF OR CURB & GUTTER ROAD). ONLY (1) - 2" ADJUSTMENT RING PER MANHOLE

WHEN A CASTING REQUIRES PITCHING, A MINIMUM OF THREE SHIMS (PLASTIC OR METAL) EQUALLY SPACED TO PREVENT ROCKING SHALL BE INSTALLED BETWEEN THE CASTING AND THE MASONRY. HYDRAULIC CEMENT SHALL BE PLACED TO FILL THE ENTIRE SPACE BETWEEN THE CASTING & MASONRY.

PRE-CAST FLAT TOPS WILL NOT BE PERMITTED ON 4' OR 5' DIAMETER MANHOLES

IF ABOVE REQUIREMENTS CANNOT BE MET, NEW BARREL SECTIONS OR CORBELS WILL BE REQUIRED.

SANITARY MANHOLE ADJUSTMENT DETAIL

NO SCALE

MINIMUM MANHOLE DIAMETERS		
PIPE SIZE	MIN. DIAMETER	MIN. WALL THICKNESS
8" - 18"	4'	5"
18" - 24"	5'	6"
24" - 30"	6'	7"
(OR AS DIRECTED BY THE DISTRICT)		

NOTE: THE MAXIMUM DROP FROM THE INVERT OF ANY PIPE IN A MANHOLE TO THE POURED CHANNEL UNDER THAT PIPE SHALL BE 8'.

NOTE: MANHOLES LOCATED OUTSIDE PUBLIC RIGHT-OF-WAY MUST BE MARKED WITH A METAL FENCE POST

ALL NEW MANHOLES SHALL BE VACUUM TESTED PER ASTM C 1244 PRIOR TO PLACING INTO SERVICE. EXISTING MH'S WILL NOT REQUIRE VACUUM TESTING.

12" MAX., ONLY (1) - 2" ADJUSTMENT RING PER MANHOLE
NOTE: 4" ADJUSTMENT RING NOT REQUIRED IN TURF AREA OR CURB AND GUTTER ROADWAYS

NOTES:

ALL ADJUSTMENT RING JOINTS SHALL BE SEALED WITH (2) 1" BEADS OF E-Z STIK, KENT SEAL OR EQUIVALENT, INCLUDING CAST IRON FRAME TO CONCRETE MANHOLE STRUCTURE.

ALL BARREL JOINTS SHALL BE SEALED WITH 3 1/2"X 3/8" E-Z STIK, KENT SEAL OR EQUIVALENT ON THE SHIP LAP. IN WET AREAS AN ADDITIONAL 1" BEAD OF E-Z STIK, KENT SEAL OR EQUIVALENT WILL BE REQUIRED ON THE LOWER HORIZONTAL PORTION OF THE SHIP LAP.

MANHOLE STRUCTURE TO BE CONSTRUCTED OF PRE-CAST REINFORCED CONCRETE MANHOLE RISER PIPE. MANHOLE CONSTRUCTION SHALL CONFORM TO A.S.T.M. C478-90 OR LATEST DESIGNATION.

WHEN A CASTING REQUIRES PITCHING, A MINIMUM OF THREE SHIMS (PLASTIC OR METAL) EQUALLY SPACED TO PREVENT ROCKING SHALL BE INSTALLED BETWEEN THE CASTING AND THE MASONRY. HYDRAULIC CEMENT SHALL BE PLACED TO FILL THE SPACE BETWEEN THE CASTING & MASONRY.

PRE-CAST FLAT TOPS WILL NOT BE PERMITTED ON DISTRICT MANHOLES

PIPE CONNECTION TO PROPOSED MANHOLE SHALL BE MADE WATER-TIGHT BY MEANS OF RUBBER GASKET SEAL (A-LOK OR EQUAL), CONFORMING TO A.S.T.M. F-477, CAST INTEGRALLY IN MANHOLE WALL OR RUBBER GASKET SEAL AND STAINLESS STEEL CLAMP CONFORMING TO A.S.T.M. C-923.

PIPE CONNECTION TO EXISTING MANHOLE SHALL BE MADE WATER-TIGHT BY MEANS OF RUBBER GASKET SEAL AND STAINLESS STEEL CLAMP, CONFORMING TO A.S.T.M. C-923. PSX SERIES SIX OR EQUAL. PIPE ACCESS SHALL BE MADE BY CORE DRILLING MANHOLE WALL.

PSX SERIES GASKETS ARE NOT PERMITTED ON MH. OPENINGS OVER 20' DEEP. MH. OPENINGS OVER 20' DEEP SHALL REQUIRE A-LOK TO MANHOLE GASKET.

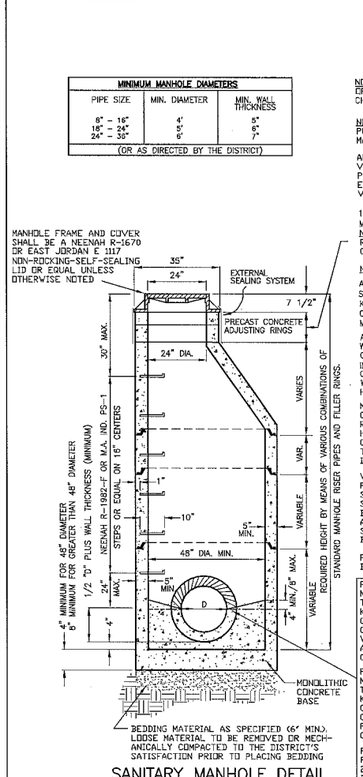

SANITARY MANHOLE DETAIL

SECTION A-A

MANHOLE FRAME AND COVER SHALL BE A NEENAH R-1670 OR EAST JORDAN E 1117 NON-ROCKING-SELF-SEALING LID OR EQUAL UNLESS OTHERWISE NOTED

12" MAX., ONLY (1) - 2" ADJUSTMENT RING PER MANHOLE
NOTE: 4" ADJUSTMENT RING NOT REQUIRED IN TURF AREA OR CURB AND GUTTER ROADWAYS

ANCHOR FLEXIBLE PIPE TO WALL WITH STAINLESS STEEL STRAPS AND ANCHORS @ 18" CENTERS AS APPROVED BY THE ENGINEER FILL ENTIRE EXCAVATION ONE FOOT (1') OVER TOP OF PIPE WITH BEDDING MATERIAL.

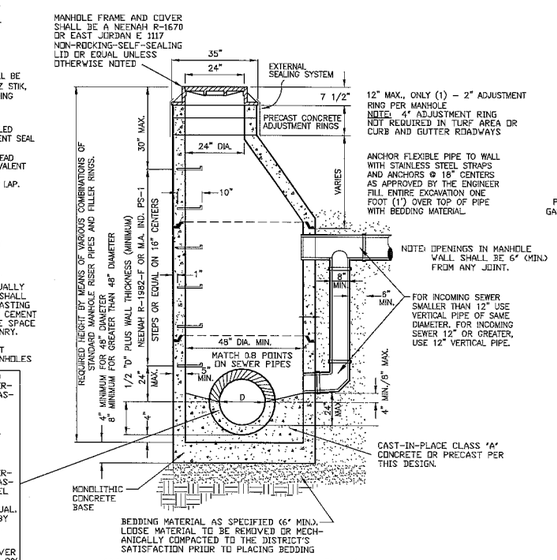

SANITARY DROP MANHOLE DETAIL

SECTION A-A

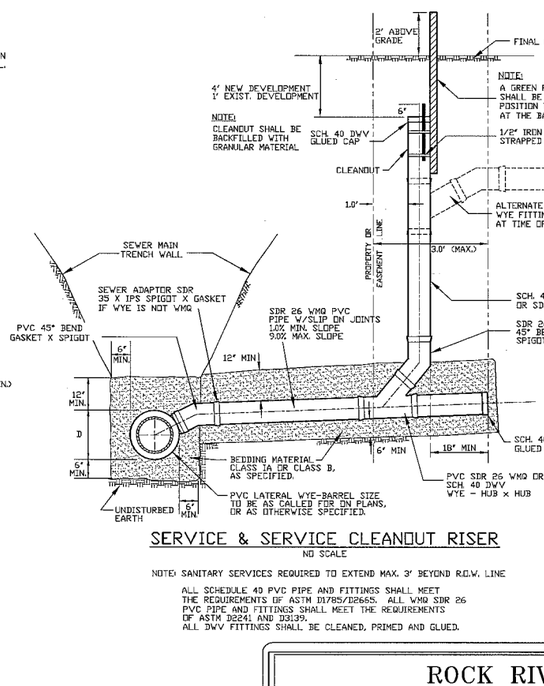

SERVICE & SERVICE CLEANOUT RISER

NO SCALE

NOTE: SANITARY SERVICES REQUIRED TO EXTEND MAX. 3' BEYOND R.O.W. LINE

ALL SCHEDULE 40 PVC PIPE AND FITTINGS SHALL MEET THE REQUIREMENTS OF ASTM D1785/D2665. ALL WMQ SDR 26 PVC PIPE AND FITTINGS SHALL MEET THE REQUIREMENTS OF ASTM D2241 AND D3139. ALL DWV FITTINGS SHALL BE CLEANED, PRIMED AND GLUED.

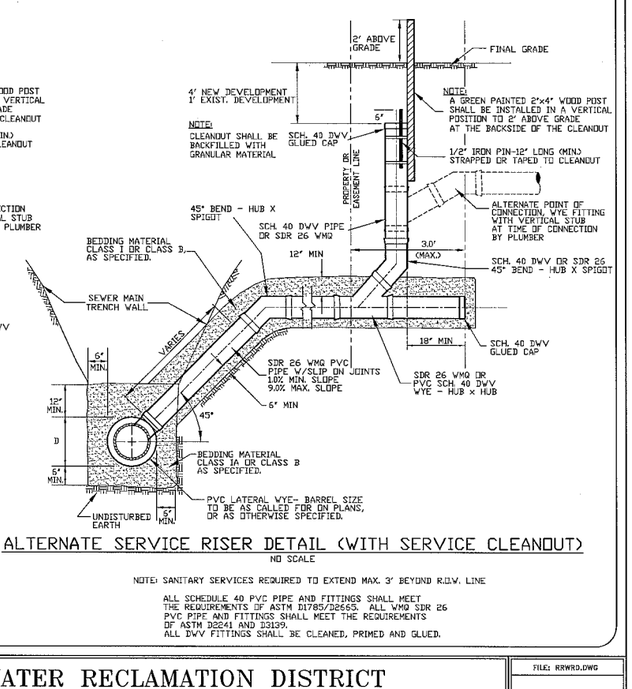

ALTERNATE SERVICE RISER DETAIL (WITH SERVICE CLEANOUT)

NO SCALE

NOTE: SANITARY SERVICES REQUIRED TO EXTEND MAX. 3' BEYOND R.O.W. LINE

ALL SCHEDULE 40 PVC PIPE AND FITTINGS SHALL MEET THE REQUIREMENTS OF ASTM D1785/D2665. ALL WMQ SDR 26 PVC PIPE AND FITTINGS SHALL MEET THE REQUIREMENTS OF ASTM D2241 AND D3139. ALL DWV FITTINGS SHALL BE CLEANED, PRIMED AND GLUED.

ROCK RIVER WATER RECLAMATION DISTRICT

3333 KISHWAUKEE ST., P.O. BOX 7480, ROCKFORD, ILLINOIS 61126-7480 - PH. (815) 387-7660/FAX (815) 387-7665

REV: 1/1/97 PAD	REV: 3/5/00 PAD	REV: 5/14/03 PAD
REV: 2/7/97 PAD	REV: 1/10/01 PAD	REV: 2/2/04 PAD
REV: 3/19/98 PAD	REV: 2/5/02 PAD	REV: 1/29/09 PAD

STANDARD DETAIL SHEET

FILE: RRWRD.DWG

Township 44 North, Range 1 East of the 3rd P.M.

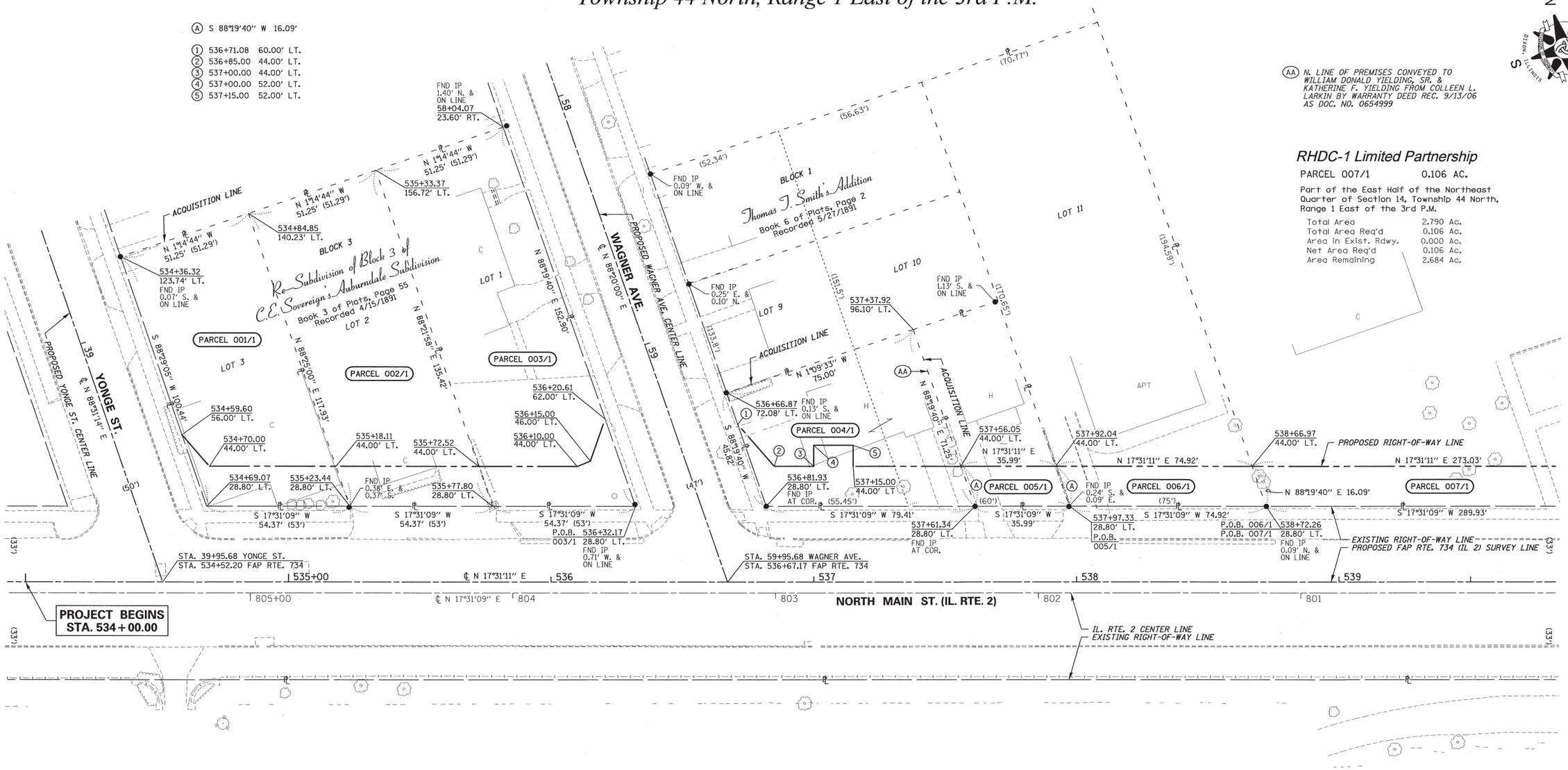

SURVEYOR'S STATEMENT

I, COVENTINE FIDIS, HEREBY STATE THAT I AM A PROFESSIONAL LAND SURVEYOR OF THE STATE OF ILLINOIS; THAT THE SURVEY OF PROPOSED FAP ROUTE 734 WAS MADE BY ME OR UNDER MY DIRECT SUPERVISION; THAT THE LAND CORNER TIES AS SHOWN HEREON, ARE A TRUE AND CORRECT REPRESENTATION OF SAID SURVEY; AND THAT THE PLAT IS IN ACCORDANCE WITH THE LAND ACQUISITION POLICIES AND PROCEDURES MANUAL, OR THE DEPARTMENT'S DISTRICT POLICIES.

DATED THIS 19th DAY OF JUNE, 2014

STATE OF ILLINOIS
COVENTINE FIDIS
35-2159
DIXON, ILL.
PROFESSIONAL LAND SURVEYOR

COVENTINE FIDIS - ILLINOIS PROFESSIONAL LAND SURVEYOR NO. 35-2159
MY LICENSE EXPIRES 11/30/14

Kurtis E. Wirth, D.D.S.

PARCEL 001/1 5,821 SQ. FT.

Lot 3 in Block 3 in Re-Subdivision of Block 3 of C.E. Sovereign's Auburndale Subdivision

Total Area	5,821 Sq. Ft.
Total Area Req'd	5,821 Sq. Ft.
Area in Exist. Rdwy.	0 Sq. Ft.
Net Area Req'd	5,821 Sq. Ft.
Area Remaining	0 Sq. Ft.

Michael B. Jones

PARCEL 002/1 6,708 SQ. FT.

Lot 2 in Block 3 in Re-Subdivision of Block 3 of C.E. Sovereign's Auburndale Subdivision

Total Area	6,708 Sq. Ft.
Total Area Req'd	6,708 Sq. Ft.
Area in Exist. Rdwy.	0 Sq. Ft.
Net Area Req'd	6,708 Sq. Ft.
Area Remaining	0 Sq. Ft.

John C. Gile & Irene M. Gile

PARCEL 003/1 7,611 SQ. FT.

Part of Lot 1 in Block 3 in Re-Subdivision of Block 3 of C.E. Sovereign's Auburndale Subdivision

Total Area	7,611 Sq. Ft.
Total Area Req'd	7,611 Sq. Ft.
Area in Exist. Rdwy.	0 Sq. Ft.
Net Area Req'd	7,611 Sq. Ft.
Area Remaining	0 Sq. Ft.

Carlos Tovar

PARCEL 004/1 4,474 SQ. FT.

Part of Lots 9 & 10 in Block 1 in Thomas T. Smith's Addition of Auburndale.

Total Area	4,474 Sq. Ft.
Total Area Req'd	4,474 Sq. Ft.
Area in Exist. Rdwy.	0 Sq. Ft.
Net Area Req'd	4,474 Sq. Ft.
Area Remaining	0 Sq. Ft.

Fabio R. Mendes

PARCEL 005/1 547 SQ. FT.

Part of Lot 10 in Block 1 in Thomas T. Smith's Addition of Auburndale.

Total Area	2,637 Sq. Ft.
Total Area Req'd	547 Sq. Ft.
Area in Exist. Rdwy.	0 Sq. Ft.
Net Area Req'd	547 Sq. Ft.
Area Remaining	2,090 Sq. Ft.

Louis Bageanis

PARCEL 006/1 1,139 SQ. FT.

Part of Lot 11 in Block 1 in Thomas T. Smith's Addition of Auburndale.

Total Area	13,022 Sq. Ft.
Total Area Req'd	1,139 Sq. Ft.
Area in Exist. Rdwy.	0 Sq. Ft.
Net Area Req'd	1,139 Sq. Ft.
Area Remaining	11,883 Sq. Ft.

Notes: BEARINGS BASED ON SURVEY CONTROL DATA AS PROVIDED BY IDOT.

PROJECT DATUM IS NAD83(97) ILLINOIS STATE PLANE COORDINATES, WEST ZONE.
GROUND DISTANCE = THE PROJECT COMBINATION FACTOR OF 1.000009398 X GRID DISTANCE.
ALL BEARINGS AND DISTANCES SHOWN HEREON ARE BASED ON "GRID COORDINATES".

AMERICAN
SURVEYING & ENGINEERING, P.C.
841 N. Galena Ave. Dixon, IL 61021
815-288-6231
ILLINOIS PROFESSIONAL DESIGN FIRM NO. 184-003192
ASE JOB # 112119

FILE NAME = D264C21-sht-rowplat01.dgn	USER NAME =	DESIGNED - GB	REVISED -	ILLINOIS DEPARTMENT OF TRANSPORTATION RIGHT-OF-WAY PLAT	FAP RTE 734 (IL 2)	LAND SECTION 14	COUNTY WINNEBAGO JOB# R-92-002-10
DRAWER 48 FOLDER 4		DRAWN - CH	REVISED -		SEC 78R-2	T 44 N, R 1 E OF 3RD P.M.	PROJECT# Sheet 569 of 926
	PLOT SCALE = 1"=20'	CHECKED - CF	REVISED -		SCALE: 1" = 20'	SHEET NO. 1	STA 534+00 TO STA 539+50 CONTRACT NO. 64C21
	PLOT DATE = 9/12/2014	DATE - 7/12/13	REVISED -				

SEP 15 2014

Township 44 North, Range 1 East of the 3rd P.M.

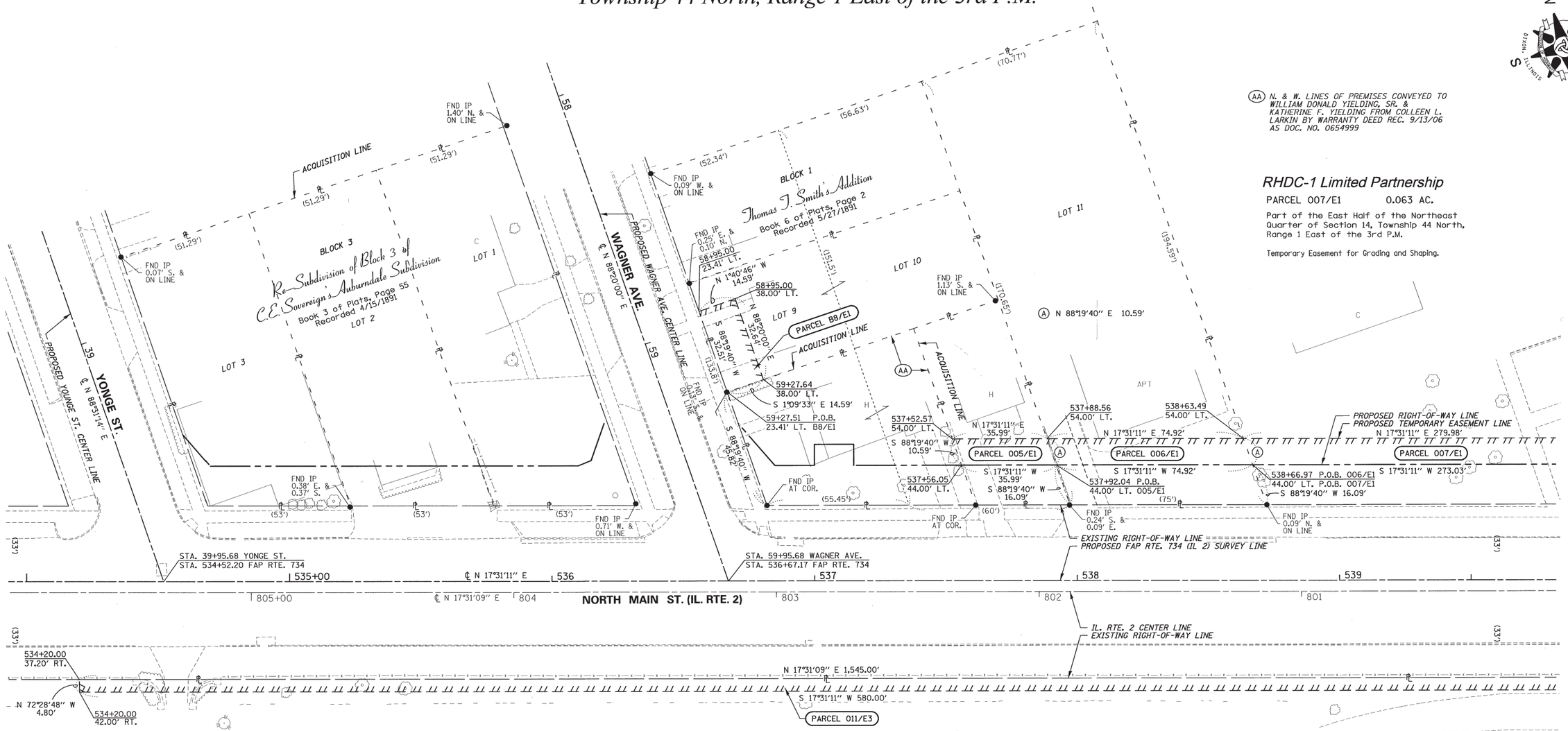

Fabio R. Mendes

PARCEL 005/E1 360 SQ. FT.

Part of Lot 10 in Block 1 in Thomas T. Smith's Addition of Auburndale.

Temporary Easement for Grading and Shaping & Entrance Construction.

Louis Bageanis

PARCEL 006/E1 749 SQ. FT.

Part of Lot 11 in Block 1 in Thomas T. Smith's Addition of Auburndale.

Temporary Easement for Grading and Shaping & Entrance Construction.

Pamela J. Burdick

PARCEL B8/E1 475 SQ. FT.

Part of Lot 9 in Block 1 in Thomas T. Smith's Addition of Auburndale.

Temporary Easement for Grading and Shaping & Entrance Construction.

SURVEYOR'S STATEMENT

I, COVENTINE FIDIS, HEREBY STATE THAT I AM A PROFESSIONAL LAND SURVEYOR OF THE STATE OF ILLINOIS; THAT THE SURVEY OF PROPOSED FAP ROUTE 734 WAS MADE BY ME OR UNDER MY DIRECT SUPERVISION; THAT THE LAND CORNER TIES AS SHOWN HEREON, ARE A TRUE AND CORRECT REPRESENTATION OF SAID SURVEY; AND THAT THE PLAT IS IN ACCORDANCE WITH THE LAND ACQUISITION POLICIES AND PROCEDURES MANUAL, OR THE DEPARTMENT'S DISTRICT POLICIES.

DATED THIS 19th DAY OF JUNE, 2014

STATE OF ILLINOIS · COVENTINE FIDIS · 35-2159 · DIXON, ILL. · PROFESSIONAL LAND SURVEYOR

COVENTINE FIDIS - ILLINOIS PROFESSIONAL LAND SURVEYOR NO. 35-2159
MY LICENSE EXPIRES 11/30/14

Notes: BEARINGS BASED ON SURVEY CONTROL DATA AS PROVIDED BY IDOT.

PROJECT DATUM IS NAD83(97) ILLINOIS STATE PLANE COORDINATES, WEST ZONE.
GROUND DISTANCE = THE PROJECT COMBINATION FACTOR OF 1.000009398 X GRID DISTANCE.
ALL BEARINGS AND DISTANCES SHOWN HEREON ARE BASED ON "GRID COORDINATES".

AMERICAN
SURVEYING & ENGINEERING, P.C.
841 N. Galena Ave. Dixon, IL 61021
815-288-6231
ILLINOIS PROFESSIONAL DESIGN FIRM NO. 184-003192
ASE JOB # 112119

FILE NAME = D264C21-sht-rowplat01E.dgn	USER NAME =	DESIGNED - GB	REVISED -	ILLINOIS DEPARTMENT OF TRANSPORTATION EASEMENT PLAT	FAP RTE 734 (IL 2)	LAND SECTION 14	COUNTY WINNEBAGO JOB# R-92-002-10
DRAWER 48 FOLDER 4		DRAWN - CH	REVISED -		SEC 78R-2	T 44 N, R 1 E OF 3RD P.M.	PROJECT# Sheet 570 of 926
	PLOT SCALE = 1"=20'	CHECKED - CF	REVISED -		SCALE: 1" = 20'	SHEET NO. E1	STA 534+00 TO STA 539+50 CONTRACT NO. 64C21
	PLOT DATE = 9/12/2014	DATE - 7/12/13	REVISED -				

SEP 15 2014

Township 44 North, Range 1 East of the 3rd P.M.

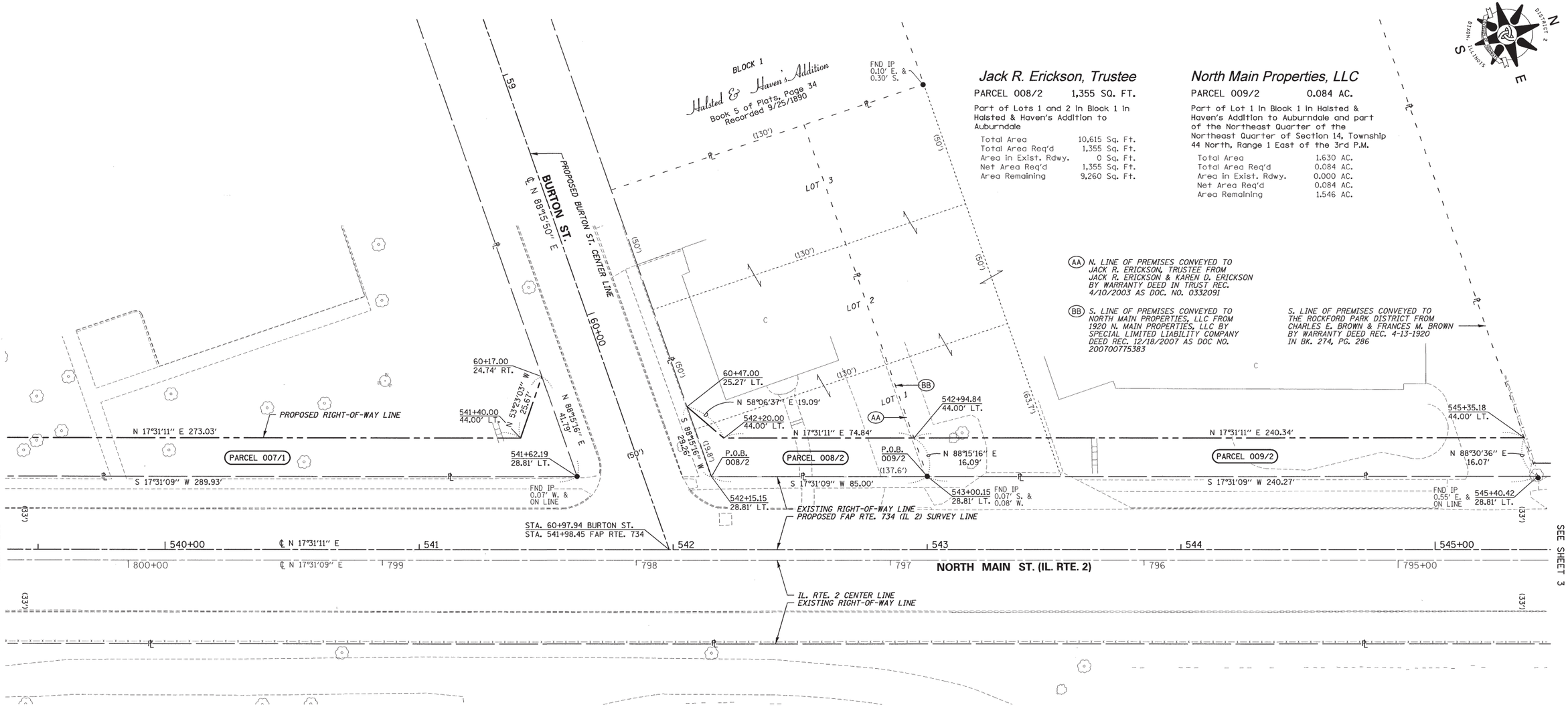

Jack R. Erickson, Trustee

PARCEL 008/2 1,355 SQ. FT.

Part of Lots 1 and 2 in Block 1 in Halsted & Haven's Addition to Auburndale

Total Area	10,615 Sq. Ft.
Total Area Req'd	1,355 Sq. Ft.
Area in Exist. Rdwy.	0 Sq. Ft.
Net Area Req'd	1,355 Sq. Ft.
Area Remaining	9,260 Sq. Ft.

North Main Properties, LLC

PARCEL 009/2 0.084 AC.

Part of Lot 1 in Block 1 in Halsted & Haven's Addition to Auburndale and part of the Northeast Quarter of the Northeast Quarter of Section 14, Township 44 North, Range 1 East of the 3rd P.M.

Total Area	1.630 AC.
Total Area Req'd	0.084 AC.
Area in Exist. Rdwy.	0.000 AC.
Net Area Req'd	0.084 AC.
Area Remaining	1.546 AC.

SURVEYOR'S STATEMENT

I, COVENTINE FIDIS, HEREBY STATE THAT I AM A PROFESSIONAL LAND SURVEYOR OF THE STATE OF ILLINOIS; THAT THE SURVEY OF PROPOSED FAP ROUTE 734 WAS MADE BY ME OR UNDER MY DIRECT SUPERVISION; THAT THE LAND CORNER TIES AS SHOWN HEREON, ARE A TRUE AND CORRECT REPRESENTATION OF SAID SURVEY; AND THAT THE PLAT IS IN ACCORDANCE WITH THE LAND ACQUISITION POLICIES AND PROCEDURES MANUAL, OR THE DEPARTMENT'S DISTRICT POLICIES.

DATED THIS 31st DAY OF MARCH, 2014

STATE OF ILLINOIS
COVENTINE FIDIS
35-2159
DIXON, ILL.
PROFESSIONAL LAND SURVEYOR

COVENTINE FIDIS - ILLINOIS PROFESSIONAL LAND SURVEYOR NO. 35-2159
MY LICENSE EXPIRES 11/30/14

Notes: BEARINGS BASED ON SURVEY CONTROL DATA AS PROVIDED BY IDOT.

PROJECT DATUM IS NAD83(97) ILLINOIS STATE PLANE COORDINATES, WEST ZONE.
GROUND DISTANCE = THE PROJECT COMBINATION FACTOR OF 1.000009398 X GRID DISTANCE.
ALL BEARINGS AND DISTANCES SHOWN HEREON ARE BASED ON "GRID COORDINATES".

AMERICAN
SURVEYING & ENGINEERING, P.C.
841 N. Galena Ave. Dixon, IL 61021
815-288-6231
ILLINOIS PROFESSIONAL DESIGN FIRM NO. 184-003192
ASE JOB # 112119

FILE NAME = D264C21-sht-rowplat02.dgn	USER NAME =	DESIGNED - GB	REVISED -	ILLINOIS DEPARTMENT OF TRANSPORTATION RIGHT-OF-WAY PLAT	FAP RTE 734 (IL 2)	LAND SECTION 14	COUNTY WINNEBAGO JOB# R-92-002-10
DRAWER 48 FOLDER 4		DRAWN - CH	REVISED -		SEC 78R-2	T 44 N, R 1 E OF 3RD P.M.	PROJECT# Sheet 571 of 926
	PLOT SCALE = 1'=20'	CHECKED - CF	REVISED -		SCALE: 1" = 20'	SHEET NO. 2	STA 539+50 TO STA 545+00 CONTRACT NO. 64C21
	PLOT DATE = 3/31/2014	DATE - 7/12/13	REVISED -				

APR 01 2014

Township 44 North, Range 1 East of the 3rd P.M.

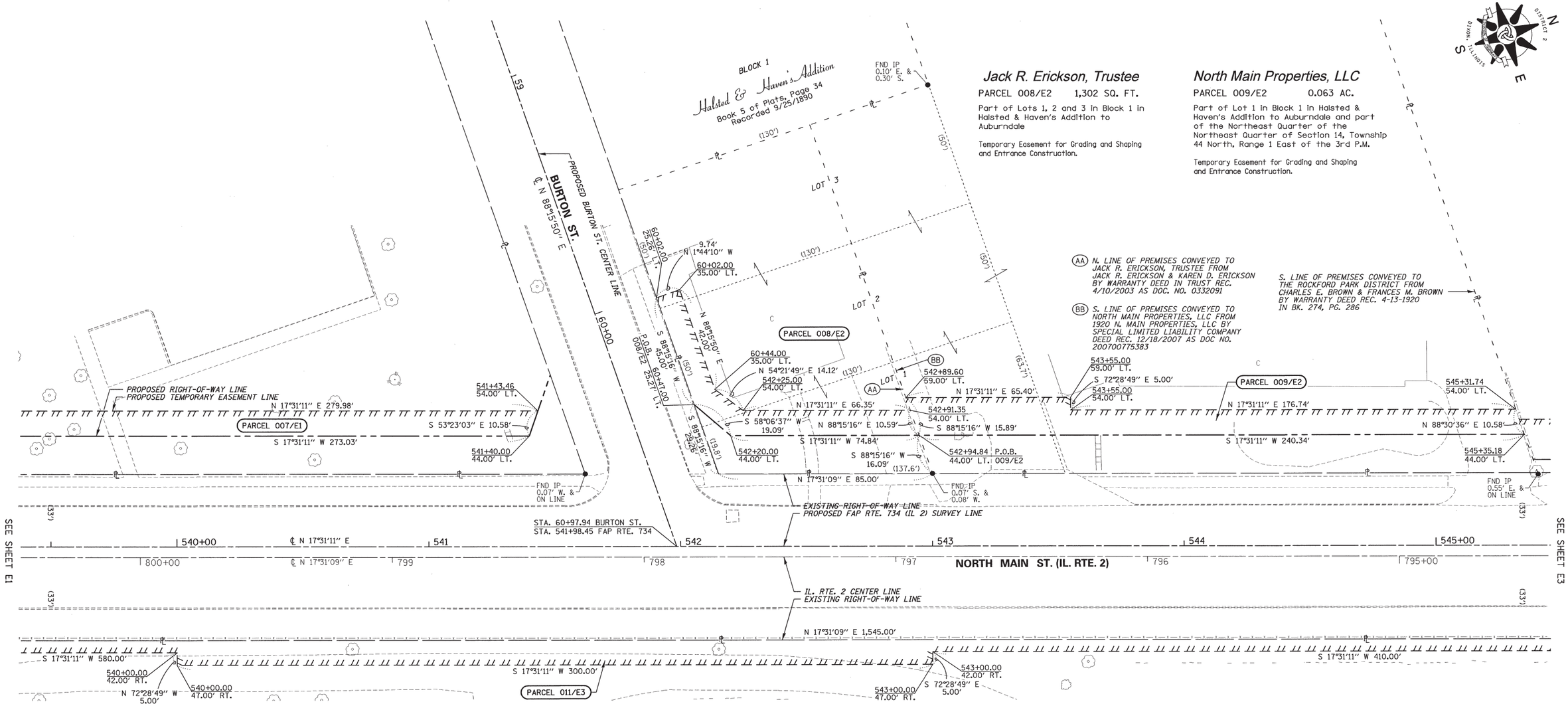

SURVEYOR'S STATEMENT

I, COVENTINE FIDIS, HEREBY STATE THAT I AM A PROFESSIONAL LAND SURVEYOR OF THE STATE OF ILLINOIS; THAT THE SURVEY OF PROPOSED FAP ROUTE 734 WAS MADE BY ME OR UNDER MY DIRECT SUPERVISION; THAT THE LAND CORNER TIES AS SHOWN HEREON, ARE A TRUE AND CORRECT REPRESENTATION OF SAID SURVEY; AND THAT THE PLAT IS IN ACCORDANCE WITH THE LAND ACQUISITION POLICIES AND PROCEDURES MANUAL, OR THE DEPARTMENT'S DISTRICT POLICIES.

DATED THIS 31st DAY OF MARCH, 2014

STATE OF ILLINOIS
COVENTINE FIDIS
35-2159
DIXON, ILL.
PROFESSIONAL LAND SURVEYOR

COVENTINE FIDIS - ILLINOIS PROFESSIONAL
LAND SURVEYOR NO. 35-2159
MY LICENSE EXPIRES 11/30/14

Notes: BEARINGS BASED ON SURVEY CONTROL DATA AS PROVIDED BY IDOT.

PROJECT DATUM IS NAD83(97) ILLINOIS STATE PLANE COORDINATES, WEST ZONE.
GROUND DISTANCE = THE PROJECT COMBINATION FACTOR OF 1.000009398 X GRID DISTANCE.
ALL BEARINGS AND DISTANCES SHOWN HEREON ARE BASED ON "GRID COORDINATES".

AMERICAN
SURVEYING & ENGINEERING, P.C.
841 N. Galena Ave. Dixon, IL 61021
815-288-6231
ILLINOIS PROFESSIONAL DESIGN FIRM NO. 184-003192
ASE JOB # 112119

FILE NAME = D264C21-sht-rowplat02E.dgn	USER NAME =	DESIGNED - GB	REVISED -	ILLINOIS DEPARTMENT OF TRANSPORTATION EASEMENT PLAT	FAP RTE 734 (IL 2)	LAND SECTION 14	COUNTY WINNEBAGO JOB# R-92-002-10
DRAWER 48 FOLDER 4		DRAWN - CH	REVISED -		SEC 78R-2	T 44 N, R 1 E OF 3RD P.M.	PROJECT# Sheet 572 of 926
	PLOT SCALE = 1"=20'	CHECKED - CF	REVISED -		SCALE: 1" = 20'	SHEET NO. E2	STA 539+50 TO STA 545+00 CONTRACT NO. 64C21
	PLOT DATE = 3/31/2014	DATE - 7/12/13	REVISED -				

APR 01 2014

Township 44 North, Range 1 East of the 3rd P.M.

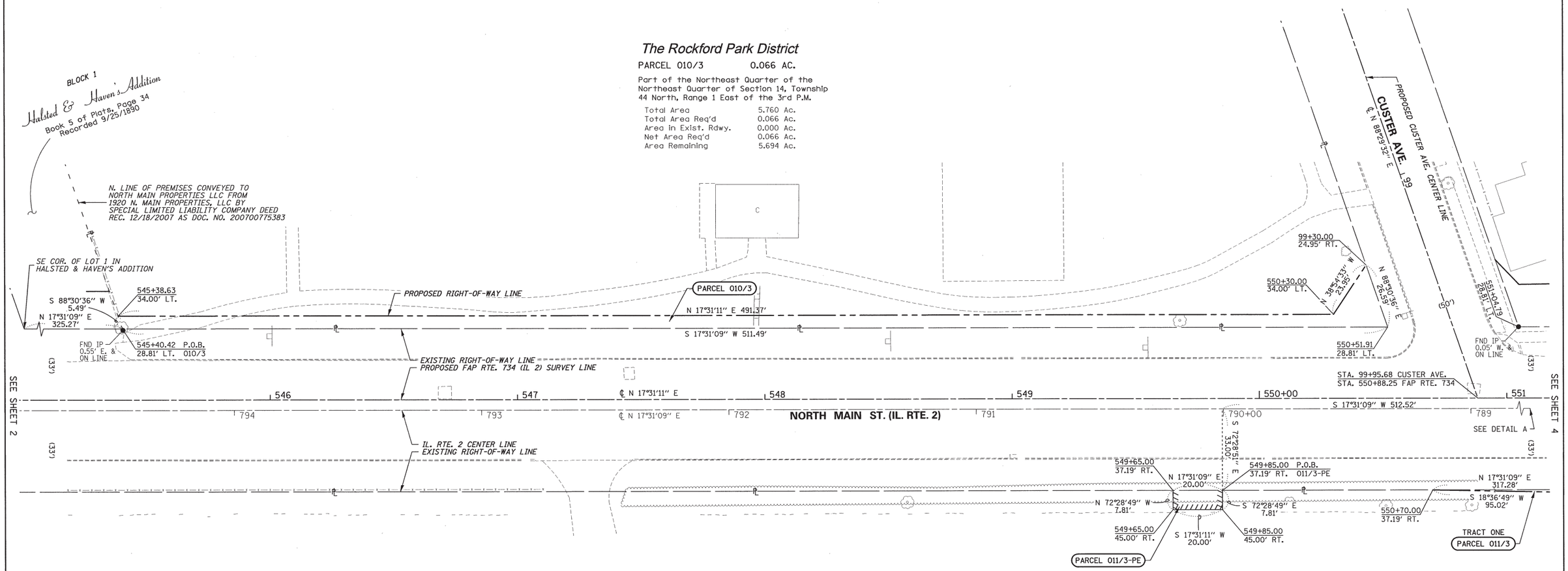

The Rockford Park District

PARCEL 010/3 0.066 AC.

Part of the Northeast Quarter of the Northeast Quarter of Section 14, Township 44 North, Range 1 East of the 3rd P.M.

Total Area	5.760 Ac.
Total Area Req'd	0.066 Ac.
Area in Exist. Rdwy.	0.000 Ac.
Net Area Req'd	0.066 Ac.
Area Remaining	5.694 Ac.

Rockford Cemetery Association

PARCEL 011/3 0.015 AC.

Part of the Northeast Quarter of Section 14 and of the Northwest Quarter of Section 13, Township 44 North, Range 1 East of the 3rd P.M.

Total Area	66.004 Ac.
Total Area Req'd	0.015 Ac.
Tract One	0.013 Ac.
Tract Two	0.002 Ac.
Area in Exist. Rdwy.	0.000 Ac.
Tract One	0.000 Ac.
Tract Two	0.000 Ac.
Net Area Req'd	0.015 Ac.
Tract One	0.013 Ac.
Tract TWo	0.002 Ac.
Area Remaining	65.989 Ac.

PARCEL 011/3-PE 0.004 AC.

Permanent Easement for Inlet maintenance.

SURVEYOR'S STATEMENT

I, COVENTINE FIDIS, HEREBY STATE THAT I AM A PROFESSIONAL LAND SURVEYOR OF THE STATE OF ILLINOIS; THAT THE SURVEY OF PROPOSED FAP ROUTE 734 WAS MADE BY ME OR UNDER MY DIRECT SUPERVISION; THAT THE LAND CORNER TIES AS SHOWN HEREON, ARE A TRUE AND CORRECT REPRESENTATION OF SAID SURVEY; AND THAT THE PLAT IS IN ACCORDANCE WITH THE LAND ACQUISITION POLICIES AND PROCEDURES MANUAL, OR THE DEPARTMENT'S DISTRICT POLICIES.

DATED THIS 31st DAY OF MARCH, 2014

STATE OF ILLINOIS ★ COVENTINE FIDIS ★ 35-2159 DIXON, ILL. PROFESSIONAL LAND SURVEYOR

COVENTINE FIDIS - ILLINOIS PROFESSIONAL
LAND SURVEYOR NO. 35-2159
MY LICENSE EXPIRES 11/30/14

Notes: BEARINGS BASED ON SURVEY CONTROL DATA AS PROVIDED BY IDOT.

PROJECT DATUM IS NAD83(97) ILLINOIS STATE PLANE COORDINATES, WEST ZONE.
GROUND DISTANCE = THE PROJECT COMBINATION FACTOR OF 1.000009398 X GRID DISTANCE.
ALL BEARINGS AND DISTANCES SHOWN HEREON ARE BASED ON "GRID COORDINATES".

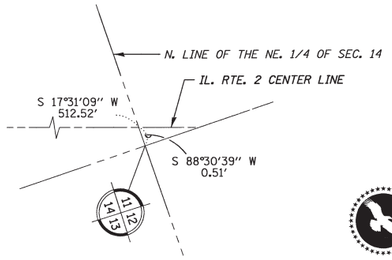

DETAIL A
NOT TO SCALE

AMERICAN
SURVEYING & ENGINEERING, P.C.
841 N. Galena Ave. Dixon, IL 61021
815-288-6231
ILLINOIS PROFESSIONAL DESIGN FIRM NO. 184-003192
ASE JOB # 112119

FILE NAME = D264C21-sht-rowplat03.dgn	USER NAME =	DESIGNED - GB	REVISED -	ILLINOIS DEPARTMENT OF TRANSPORTATION RIGHT-OF-WAY PLAT	FAP RTE 734 (IL 2)	LAND SECTION 14	COUNTY WINNEBAGO JOB# R-92-002-10
DRAWER 48 FOLDER 4		DRAWN - CH	REVISED -		SEC 78R-2	T 44 N, R 1 E OF 3RD P.M.	PROJECT# Sheet 573 of 926
	PLOT SCALE = 1"=20'	CHECKED - CF	REVISED -		SCALE: 1" = 20'	SHEET NO. 3	STA 545+00 TO STA 551+00 CONTRACT NO. 64C21
	PLOT DATE = 3/31/2014	DATE - 7/12/13	REVISED -				

APR 0 1 2014

Township 44 North, Range 1 East of the 3rd P.M.

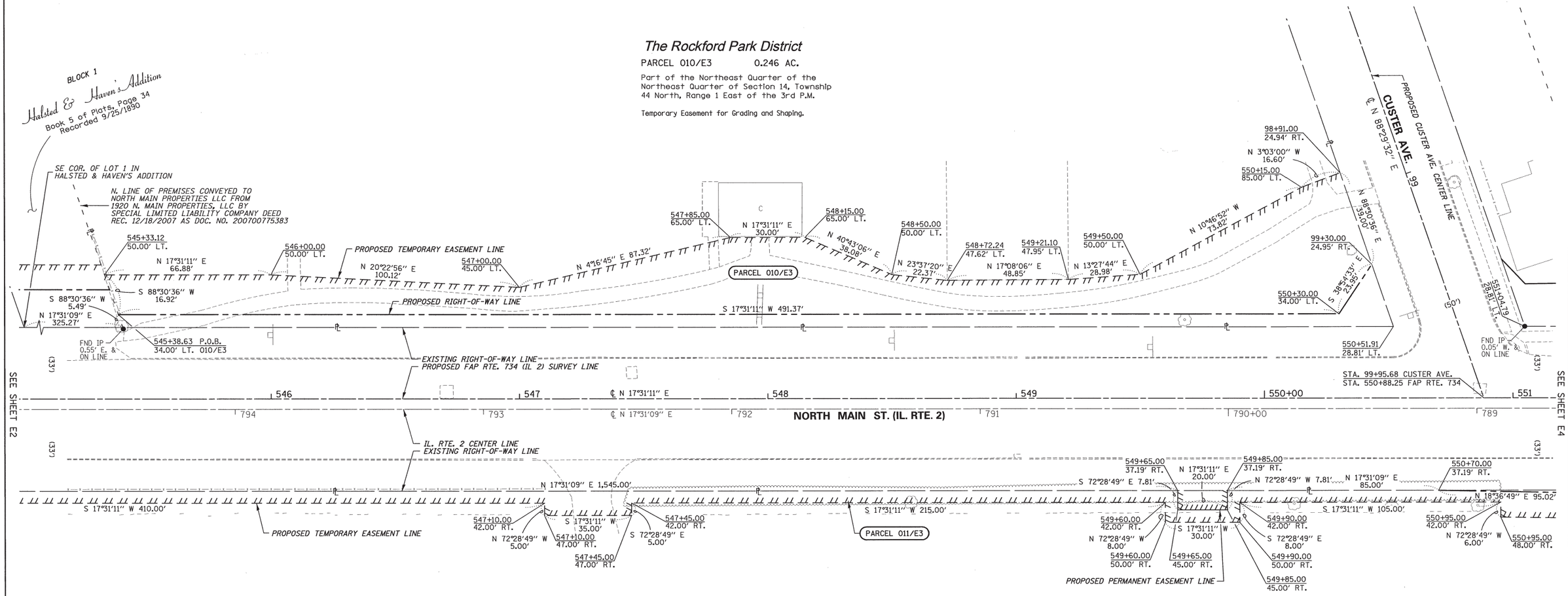

SURVEYOR'S STATEMENT

I, COVENTINE FIDIS, HEREBY STATE THAT I AM A PROFESSIONAL LAND SURVEYOR OF THE STATE OF ILLINOIS; THAT THE SURVEY OF PROPOSED FAP ROUTE 734 WAS MADE BY ME OR UNDER MY DIRECT SUPERVISION; THAT THE LAND CORNER TIES AS SHOWN HEREON, ARE A TRUE AND CORRECT REPRESENTATION OF SAID SURVEY; AND THAT THE PLAT IS IN ACCORDANCE WITH THE LAND ACQUISITION POLICIES AND PROCEDURES MANUAL, OR THE DEPARTMENT'S DISTRICT POLICIES.

DATED THIS 31st DAY OF MARCH, 2014

STATE OF ILLINOIS ★ COVENTINE FIDIS ★ 35-2159 DIXON, ILL. PROFESSIONAL LAND SURVEYOR

COVENTINE FIDIS - ILLINOIS PROFESSIONAL LAND SURVEYOR NO. 35-2159
MY LICENSE EXPIRES 11/30/14

Rockford Cemetery Association

PARCEL 011/E3 0.312 AC.

Part of the Northeast Quarter of Section 14 and the Northwest Quarter of Section 13, Township 44 North, Range 1 East of the 3rd P.M.

Temporary Easement for Grading and Shaping and Entrance Construction.

Notes: BEARINGS BASED ON SURVEY CONTROL DATA AS PROVIDED BY IDOT.

PROJECT DATUM IS NAD83(97) ILLINOIS STATE PLANE COORDINATES, WEST ZONE.
GROUND DISTANCE = THE PROJECT COMBINATION FACTOR OF 1.000009398 X GRID DISTANCE.
ALL BEARINGS AND DISTANCES SHOWN HEREON ARE BASED ON "GRID COORDINATES".

AMERICAN
SURVEYING & ENGINEERING, P.C.
841 N. Galena Ave. Dixon, IL 61021
815-288-6231
ILLINOIS PROFESSIONAL DESIGN FIRM NO. 184-003192
ASE JOB # 112119

FILE NAME = D264C21-sht-rowplat03.dgn	USER NAME =	DESIGNED - GB	REVISED -	ILLINOIS DEPARTMENT OF TRANSPORTATION EASEMENT PLAT	FAP RTE 734 (IL 2)	LAND SECTION 14	COUNTY WINNEBAGO JOB# R-92-002-10
DRAWER 48 FOLDER 4		DRAWN - CH	REVISED -		SEC 78R-2	T 44 N, R 1 E OF 3RD P.M.	PROJECT# Sheet 574 of 926
	PLOT SCALE = 1"=20'	CHECKED - CF	REVISED -		SCALE: 1" = 20'	SHEET NO. E3	STA 545+00 TO STA 551+00 CONTRACT NO. 64C21
	PLOT DATE = 3/31/2014	DATE - 7/12/13	REVISED -				

APR 0 1 2014

Township 44 North, Range 1 East of the 3rd P.M.

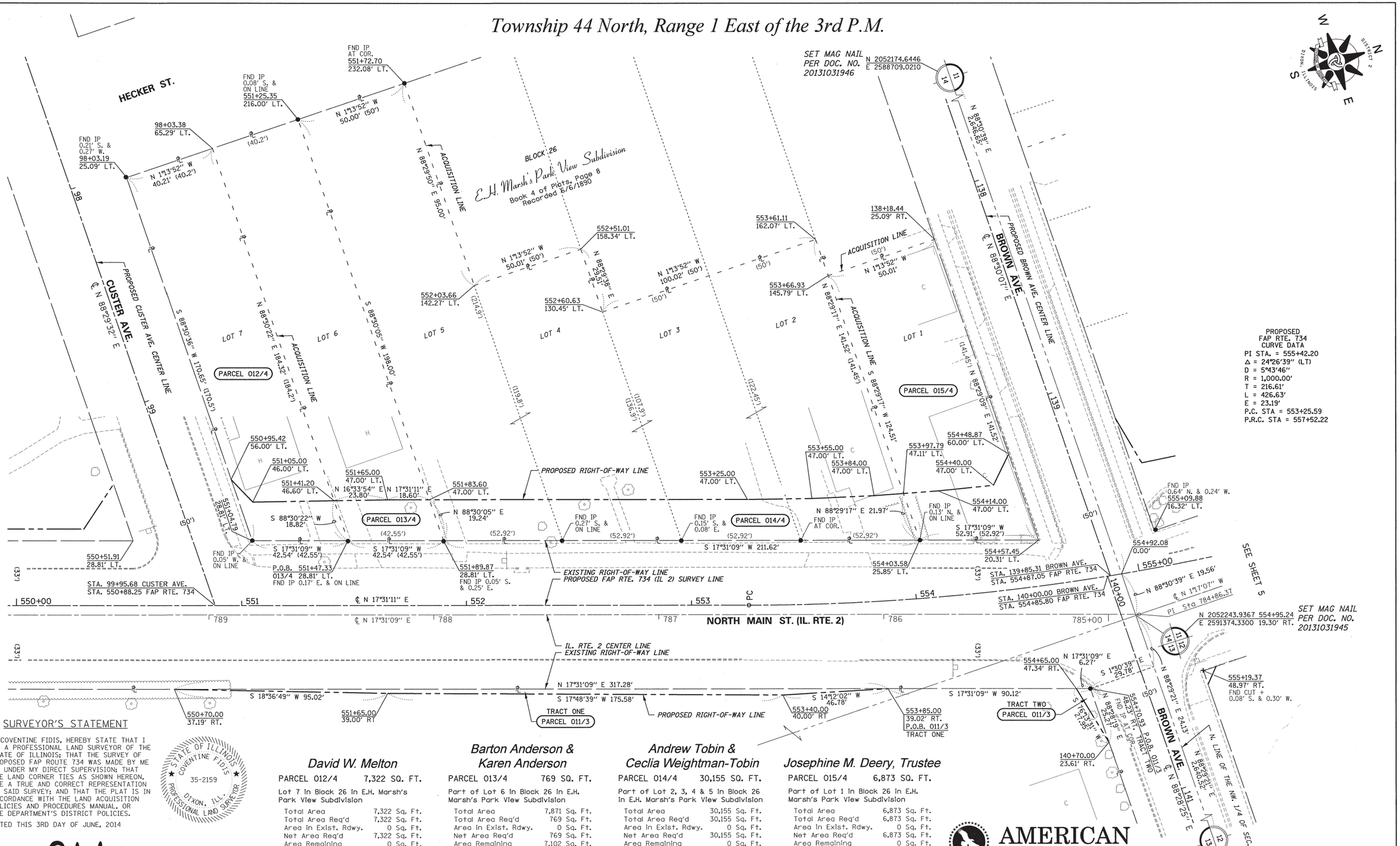

SURVEYOR'S STATEMENT

I, COVENTINE FIDIS, HEREBY STATE THAT I AM A PROFESSIONAL LAND SURVEYOR OF THE STATE OF ILLINOIS; THAT THE SURVEY OF PROPOSED FAP ROUTE 734 WAS MADE BY ME OR UNDER MY DIRECT SUPERVISION; THAT THE LAND CORNER TIES AS SHOWN HEREON, ARE A TRUE AND CORRECT REPRESENTATION OF SAID SURVEY; AND THAT THE PLAT IS IN ACCORDANCE WITH THE LAND ACQUISITION POLICIES AND PROCEDURES MANUAL, OR THE DEPARTMENT'S DISTRICT POLICIES.

DATED THIS 3RD DAY OF JUNE, 2014

STATE OF ILLINOIS
COVENTINE FIDIS
35-2159
DIXON, ILL.
PROFESSIONAL LAND SURVEYOR

COVENTINE FIDIS - ILLINOIS PROFESSIONAL LAND SURVEYOR NO. 35-2159
MY LICENSE EXPIRES 11/30/14

David W. Melton

PARCEL 012/4 7,322 SQ. FT.

Lot 7 In Block 26 In E.H. Marsh's Park View Subdivision

Total Area	7,322 Sq. Ft.
Total Area Req'd	7,322 Sq. Ft.
Area In Exist. Rdwy.	0 Sq. Ft.
Net Area Req'd	7,322 Sq. Ft.
Area Remaining	0 Sq. Ft.

Barton Anderson & Karen Anderson

PARCEL 013/4 769 SQ. FT.

Part of Lot 6 In Block 26 In E.H. Marsh's Park View Subdivision

Total Area	7,871 Sq. Ft.
Total Area Req'd	769 Sq. Ft.
Area In Exist. Rdwy.	0 Sq. Ft.
Net Area Req'd	769 Sq. Ft.
Area Remaining	7,102 Sq. Ft.

Andrew Tobin & Ceclia Weightman-Tobin

PARCEL 014/4 30,155 SQ. FT.

Part of Lot 2, 3, 4 & 5 In Block 26 In E.H. Marsh's Park View Subdivision

Total Area	30,155 Sq. Ft.
Total Area Req'd	30,155 Sq. Ft.
Area In Exist. Rdwy.	0 Sq. Ft.
Net Area Req'd	30,155 Sq. Ft.
Area Remaining	0 Sq. Ft.

Josephine M. Deery, Trustee

PARCEL 015/4 6,873 SQ. FT.

Part of Lot 1 In Block 26 In E.H. Marsh's Park View Subdivision

Total Area	6,873 Sq. Ft.
Total Area Req'd	6,873 Sq. Ft.
Area In Exist. Rdwy.	0 Sq. Ft.
Net Area Req'd	6,873 Sq. Ft.
Area Remaining	0 Sq. Ft.

Notes: BEARINGS BASED ON SURVEY CONTROL DATA AS PROVIDED BY IDOT.

PROJECT DATUM IS NAD83(97) ILLINOIS STATE PLANE COORDINATES, WEST ZONE.
GROUND DISTANCE = THE PROJECT COMBINATION FACTOR OF 1.000009398 X GRID DISTANCE.
ALL BEARINGS AND DISTANCES SHOWN HEREON ARE BASED ON "GRID COORDINATES".

AMERICAN
SURVEYING & ENGINEERING, P.C.
841 N. Galena Ave. Dixon, IL 61021
815-288-6281
ILLINOIS PROFESSIONAL DESIGN FIRM NO. 184-003192
ASE JOB # 112119

FILE NAME = D264C21-sht-rowplat04.dgn	USER NAME =	DESIGNED - GB	REVISED -	ILLINOIS DEPARTMENT OF TRANSPORTATION RIGHT-OF-WAY PLAT	FAP RTE 734 (IL 2)	LAND SECTION 11, 12, 13 & 14	COUNTY WINNEBAGO JOB# R-92-002-10
DRAWER 48 FOLDER 4		DRAWN - CH	REVISED -		SEC 78R-2	T 44 N, R 1 E OF 3RD P.M.	PROJECT# Sheet 575 of 926
	PLOT SCALE = 1"=20'	CHECKED - CF	REVISED -		SCALE: 1" = 20'	SHEET NO. 4	STA 551+00 TO STA 555+00 CONTRACT NO. 64C21
	PLOT DATE = 6/3/2014	DATE - 7/12/13	REVISED -				

JUN 04 2014

Township 44 North, Range 1 East of the 3rd P.M.

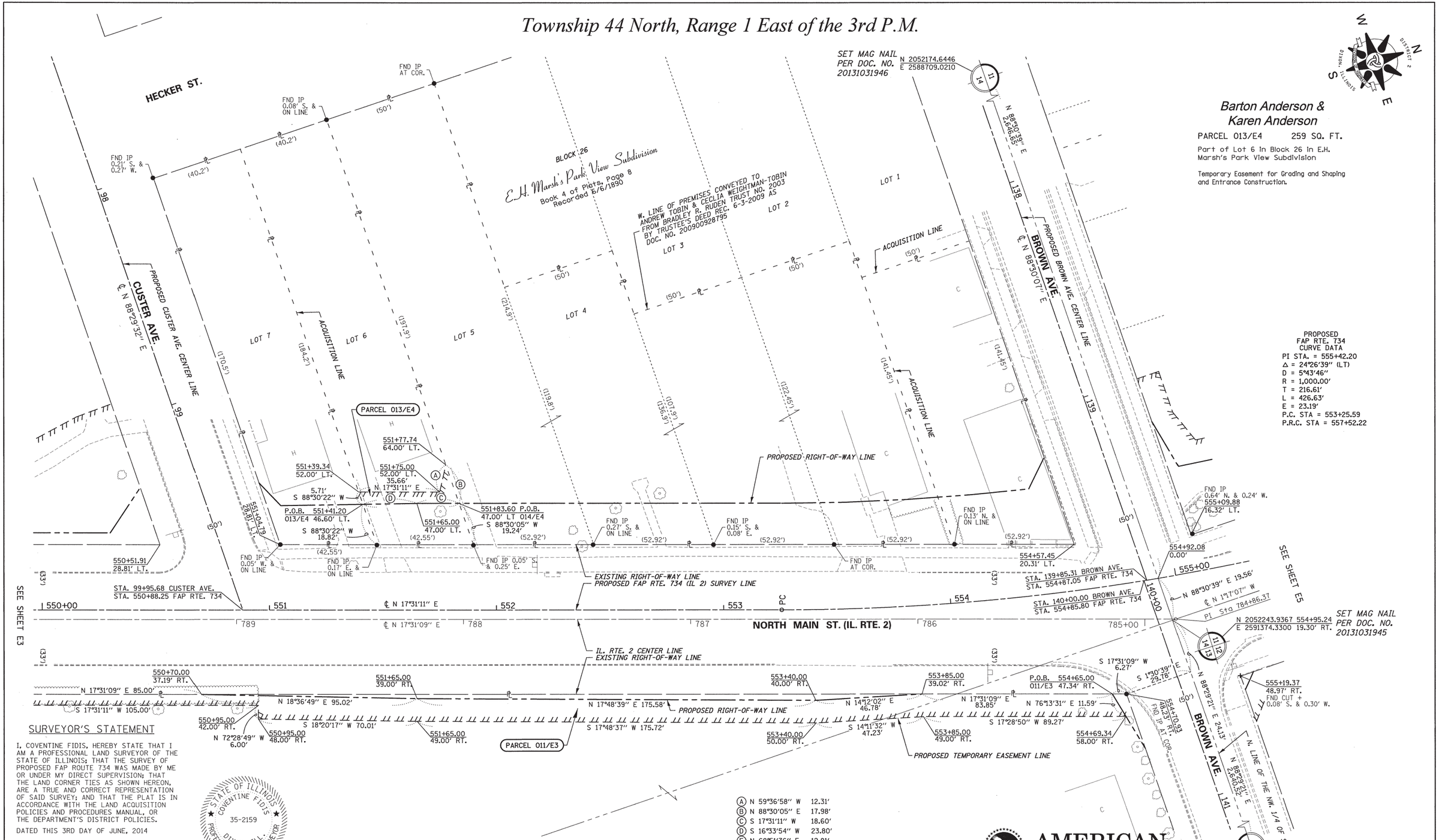

SURVEYOR'S STATEMENT

I, COVENTINE FIDIS, HEREBY STATE THAT I AM A PROFESSIONAL LAND SURVEYOR OF THE STATE OF ILLINOIS; THAT THE SURVEY OF PROPOSED FAP ROUTE 734 WAS MADE BY ME OR UNDER MY DIRECT SUPERVISION; THAT THE LAND CORNER TIES AS SHOWN HEREON, ARE A TRUE AND CORRECT REPRESENTATION OF SAID SURVEY; AND THAT THE PLAT IS IN ACCORDANCE WITH THE LAND ACQUISITION POLICIES AND PROCEDURES MANUAL, OR THE DEPARTMENT'S DISTRICT POLICIES.

DATED THIS 3RD DAY OF JUNE, 2014

STATE OF ILLINOIS COVENTINE FIDIS 35-2159 DIXON, ILL. PROFESSIONAL LAND SURVEYOR

COVENTINE FIDIS - ILLINOIS PROFESSIONAL LAND SURVEYOR NO. 35-2159
MY LICENSE EXPIRES 11/30/14

Notes: BEARINGS BASED ON SURVEY CONTROL DATA AS PROVIDED BY IDOT.

PROJECT DATUM IS NAD83(97) ILLINOIS STATE PLANE COORDINATES, WEST ZONE.
GROUND DISTANCE = THE PROJECT COMBINATION FACTOR OF 1.000009398 X GRID DISTANCE.
ALL BEARINGS AND DISTANCES SHOWN HEREON ARE BASED ON "GRID COORDINATES".

FILE NAME = D264C21-sht-rowplat04E.dgn	USER NAME =	DESIGNED - GB	REVISED -	**ILLINOIS DEPARTMENT OF TRANSPORTATION EASEMENT PLAT**	FAP RTE 734 (IL 2)	LAND SECTION 11, 12, 13 & 14	COUNTY WINNEBAGO JOB# R-92-002-10
DRAWER 48 FOLDER 4		DRAWN - CH	REVISED -		SEC 78R-2	T 44 N, R 1 E OF 3RD P.M.	PROJECT# Sheet 576 of 926
	PLOT SCALE = 1"=20'	CHECKED - CF	REVISED -		SCALE: 1" = 20'	SHEET NO. E4	STA 551+00 TO STA 555+00 CONTRACT NO. 64C21
	PLOT DATE = 6/3/2014	DATE - 7/12/13	REVISED -				

JUN 0 4 2014

Township 44 North, Range 1 East of the 3rd P.M.

PROPOSED FAP RTE. 734 CURVE DATA	PROPOSED FAP RTE. 734 CURVE DATA
PI STA. = 555+42.20	PI STA. = 560+32.94
Δ = 24°26'39" (LT)	Δ = 15°58'47" (RT)
D = 5°43'46"	D = 2°51'53"
R = 1,000.00'	R = 2,000.00'
T = 216.61'	T = 280.72'
L = 426.63'	L = 557.80'
E = 23.19'	E = 19.60'
P.C. STA = 553+25.59	P.R.C. STA = 557+52.22
P.R.C. STA = 557+52.22	P.R.C. STA = 563+10.02

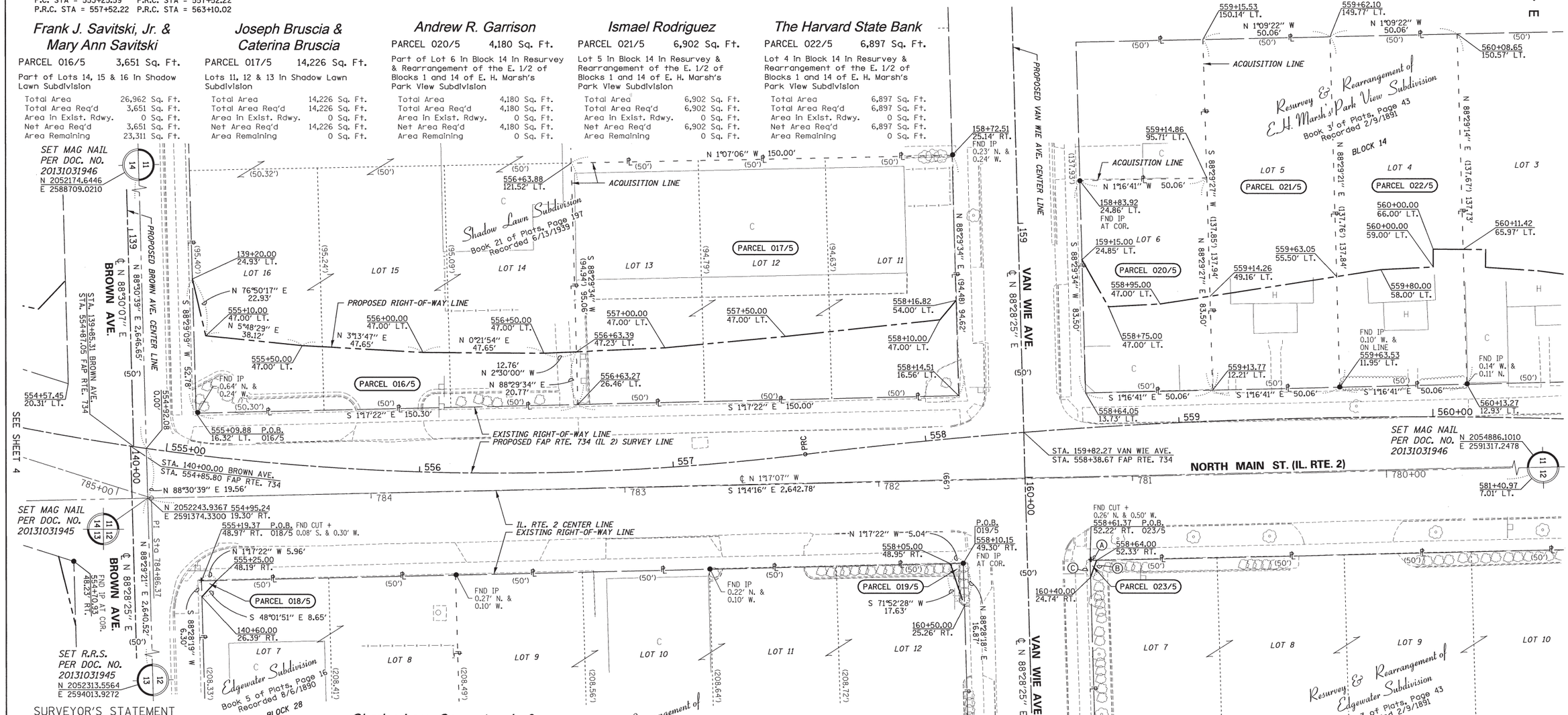

Frank J. Savitski, Jr. & Mary Ann Savitski

PARCEL 016/5 3,651 Sq. Ft.

Part of Lots 14, 15 & 16 in Shadow Lawn Subdivision

Total Area	26,962 Sq. Ft.
Total Area Req'd	3,651 Sq. Ft.
Area in Exist. Rdwy.	0 Sq. Ft.
Net Area Req'd	3,651 Sq. Ft.
Area Remaining	23,311 Sq. Ft.

Joseph Bruscia & Caterina Bruscia

PARCEL 017/5 14,226 Sq. Ft.

Lots 11, 12 & 13 in Shadow Lawn Subdivision

Total Area	14,226 Sq. Ft.
Total Area Req'd	14,226 Sq. Ft.
Area in Exist. Rdwy.	0 Sq. Ft.
Net Area Req'd	14,226 Sq. Ft.
Area Remaining	0 Sq. Ft.

Andrew R. Garrison

PARCEL 020/5 4,180 Sq. Ft.

Part of Lot 6 in Block 14 in Resurvey & Rearrangement of the E. 1/2 of Blocks 1 and 14 of E. H. Marsh's Park View Subdivision

Total Area	4,180 Sq. Ft.
Total Area Req'd	4,180 Sq. Ft.
Area in Exist. Rdwy.	0 Sq. Ft.
Net Area Req'd	4,180 Sq. Ft.
Area Remaining	0 Sq. Ft.

Ismael Rodriguez

PARCEL 021/5 6,902 Sq. Ft.

Lot 5 in Block 14 in Resurvey & Rearrangement of the E. 1/2 of Blocks 1 and 14 of E. H. Marsh's Park View Subdivision

Total Area	6,902 Sq. Ft.
Total Area Req'd	6,902 Sq. Ft.
Area in Exist. Rdwy.	0 Sq. Ft.
Net Area Req'd	6,902 Sq. Ft.
Area Remaining	0 Sq. Ft.

The Harvard State Bank

PARCEL 022/5 6,897 Sq. Ft.

Lot 4 in Block 14 in Resurvey & Rearrangement of the E. 1/2 of Blocks 1 and 14 of E. H. Marsh's Park View Subdivision

Total Area	6,897 Sq. Ft.
Total Area Req'd	6,897 Sq. Ft.
Area in Exist. Rdwy.	0 Sq. Ft.
Net Area Req'd	6,897 Sq. Ft.
Area Remaining	0 Sq. Ft.

Charles Larry Carpenter, Jr. & Kristen Marie Carpenter

PARCEL 018/5 19 Sq. Ft.

Part of Lot 7 in Block 28 in the Plat of Edgewater Subdivision

Total Area	15,027 Sq. Ft.
Total Area Req'd	19 Sq. Ft.
Area in Exist. Rdwy.	0 Sq. Ft.
Net Area Req'd	19 Sq. Ft.
Area Remaining	15,008 Sq. Ft.

James F. Szymanski & Cathie A. Szymanski, Trustees

PARCEL 019/5 42 Sq. Ft.

Part of Lot 12 in Block 28 in Resurvey & Rearrangement of the W. 1/2 of Blocks 8, 9 & 28 of Edgewater Subdivision

Total Area	41,694 Sq. Ft.
Total Area Req'd	42 Sq. Ft.
Area in Exist. Rdwy.	0 Sq. Ft.
Net Area Req'd	42 Sq. Ft.
Area Remaining	41,652 Sq. Ft.

(A) N 1°16'41" W 2.57'
(B) S 70°09'57" E 7.05'
(C) S 88°28'18" W 6.58'

Thomas Rotello

PARCEL 023/5 8 Sq. Ft.

Part of Lot 7 in Block 9 in Resurvey & Rearrangement of the W. 1/2 of Blocks 8, 9 & 28 of Edgewater Subdivision

Total Area	44,432 Sq. Ft.
Total Area Req'd	8 Sq. Ft.
Area in Exist. Rdwy.	0 Sq. Ft.
Net Area Req'd	8 Sq. Ft.
Area Remaining	44,424 Sq. Ft.

SURVEYOR'S STATEMENT

I, COVENTINE FIDIS, HEREBY STATE THAT I AM A PROFESSIONAL LAND SURVEYOR OF THE STATE OF ILLINOIS; THAT THE SURVEY OF PROPOSED FAP ROUTE 734 WAS MADE BY ME OR UNDER MY DIRECT SUPERVISION; THAT THE LAND CORNER TIES AS SHOWN HEREON, ARE A TRUE AND CORRECT REPRESENTATION OF SAID SURVEY; AND THAT THE PLAT IS IN ACCORDANCE WITH THE LAND ACQUISITION POLICIES AND PROCEDURES MANUAL, OR THE DEPARTMENT'S DISTRICT POLICIES.

DATED THIS 19th DAY OF JUNE, 2014

STATE OF ILLINOIS COVENTINE FIDIS 35-2159 DIXON, ILL. PROFESSIONAL LAND SURVEYOR

COVENTINE FIDIS - ILLINOIS PROFESSIONAL LAND SURVEYOR NO. 35-2159
MY LICENSE EXPIRES 11/30/14

Notes: BEARINGS BASED ON SURVEY CONTROL DATA AS PROVIDED BY IDOT.

PROJECT DATUM IS NAD83(97) ILLINOIS STATE PLANE COORDINATES, WEST ZONE.
GROUND DISTANCE = THE PROJECT COMBINATION FACTOR OF 1.000009398 X GRID DISTANCE.
ALL BEARINGS AND DISTANCES SHOWN HEREON ARE BASED ON "GRID COORDINATES".

AMERICAN SURVEYING & ENGINEERING, P.C.
841 N. Galena Ave. Dixon, IL 61021
815-288-6231
ILLINOIS PROFESSIONAL DESIGN FIRM NO. 184-003192
ASE JOB # 112119

FILE NAME = D264C21-sht-rowplat05.dgn	USER NAME =	DESIGNED - GB	REVISED -	ILLINOIS DEPARTMENT OF TRANSPORTATION RIGHT-OF-WAY PLAT	FAP RTE 734 (IL 2)	LAND SECTION 11, 12, 13 & 14	COUNTY WINNEBAGO JOB# R-92-002-10
DRAWER 48 FOLDER 4		DRAWN - MP	REVISED -		SEC 78R-2	T 44 N, R 1 E OF 3RD P.M.	PROJECT# Sheet 577 of 926
	PLOT SCALE = 1"=20'	CHECKED - CF	REVISED -		SCALE: 1" = 20'	SHEET NO. 5	STA 555+00 TO STA 560+50 CONTRACT NO. 64C21
	PLOT DATE = 9/12/2014	DATE - 7/12/13	REVISED -				

SEP 15 2014

Township 44 North, Range 1 East of the 3rd P.M.

PROPOSED FAP RTE. 734 CURVE DATA
PI STA. = 555+42.20
Δ = 24°26'39" (LT)
D = 5°43'46"
R = 1,000.00'
T = 216.61'
L = 426.63'
E = 23.19'
P.C. STA = 553+25.59
P.R.C. STA = 557+52.22

PROPOSED FAP RTE. 734 CURVE DATA
PI STA. = 560+32.94
Δ = 15°58'47" (RT)
D = 2°51'53"
R = 2,000.00'
T = 280.72'
L = 557.80'
E = 19.60'
P.R.C. STA = 557+52.22
P.R.C. STA = 563+10.02

(A)	S 88°29'09" W	20.00'	(H)	S 88°34'46" W	10.14'
(B)	N 68°40'18" E	15.84'	(I)	N 88°28'42" E	7.56'
(C)	N 5°31'17" E	28.29'	(J)	S 0°51'18" E	15.56'
(D)	S 76°50'17" W	22.93'	(K)	N 71°52'28" E	17.63'
(E)	N 88°28'19" E	10.09'	(L)	N 1°16'41" W	2.57'
(F)	S 1°32'14" E	4.74'	(M)	N 70°09'57" W	7.05'
(G)	S 54°09'02" W	7.90'			

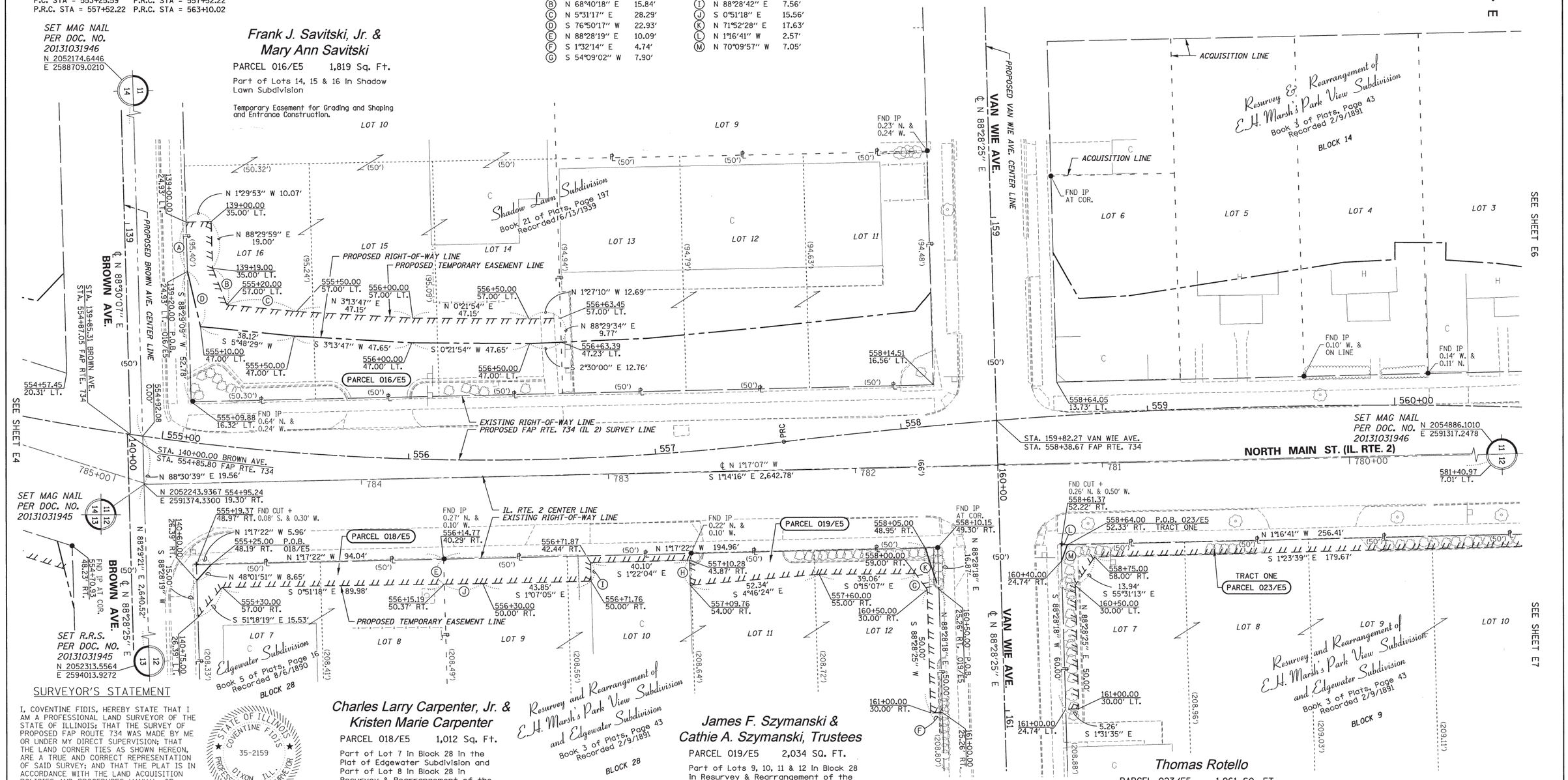

SURVEYOR'S STATEMENT

I, COVENTINE FIDIS, HEREBY STATE THAT I AM A PROFESSIONAL LAND SURVEYOR OF THE STATE OF ILLINOIS; THAT THE SURVEY OF PROPOSED FAP ROUTE 734 WAS MADE BY ME OR UNDER MY DIRECT SUPERVISION; THAT THE LAND CORNER TIES AS SHOWN HEREON, ARE A TRUE AND CORRECT REPRESENTATION OF SAID SURVEY; AND THAT THE PLAT IS IN ACCORDANCE WITH THE LAND ACQUISITION POLICIES AND PROCEDURES MANUAL, OR THE DEPARTMENT'S DISTRICT POLICIES.

DATED THIS 31st DAY OF MARCH, 2014

STATE OF ILLINOIS · COVENTINE FIDIS · 35-2159 · DIXON, ILL. · PROFESSIONAL LAND SURVEYOR

COVENTINE FIDIS - ILLINOIS PROFESSIONAL LAND SURVEYOR NO. 35-2159
MY LICENSE EXPIRES 11/30/14

Charles Larry Carpenter, Jr. & Kristen Marie Carpenter

PARCEL 018/E5 1,012 Sq. Ft.

Part of Lot 7 in Block 28 in the Plat of Edgewater Subdivision and Part of Lot 8 in Block 28 in Resurvey & Rearrangement of the W. 1/2 of Blocks 8, 9 & 28 of Edgewater Subdivision

Temporary Easement for Grading and Shaping.

James F. Szymanski & Cathie A. Szymanski, Trustees

PARCEL 019/E5 2,034 SQ. FT.

Part of Lots 9, 10, 11 & 12 in Block 28 in Resurvey & Rearrangement of the E. 1/2 of Blocks 8, 9 & 28 of Edge Water Subdivision

Temporary Easement for Grading and Shaping and Entrance Construction.

Thomas Rotello

PARCEL 023/E5 1,961 SQ. FT.

Part of Lots 7, 8, 9, 10, 11 and 12 in Block 9 in Resurvey & Rearrangement of the W. 1/2 of Blocks 8, 9 and 28 of Edgewater Subdivision

TRACT ONE 1,754 SQ. FT.
TRACT TWO 207 SQ. FT.

Temporary Easement for Grading and Shaping and Entrance Construction.

Notes: BEARINGS BASED ON SURVEY CONTROL DATA AS PROVIDED BY IDOT.

PROJECT DATUM IS NAD83(97) ILLINOIS STATE PLANE COORDINATES, WEST ZONE.
GROUND DISTANCE = THE PROJECT COMBINATION FACTOR OF 1.000009398 X GRID DISTANCE.
ALL BEARINGS AND DISTANCES SHOWN HEREON ARE BASED ON "GRID COORDINATES".

AMERICAN
SURVEYING & ENGINEERING, P.C.
841 N. Galena Ave. Dixon, IL 61021
815-288-6231
ILLINOIS PROFESSIONAL DESIGN FIRM NO. 184-003192
ASE JOB # 112119

FILE NAME = D264C21-sht-rowplat05E.dgn	USER NAME =	DESIGNED - GB	REVISED -	ILLINOIS DEPARTMENT OF TRANSPORTATION EASEMENT PLAT	FAP RTE 734 (IL 2)	LAND SECTION 11, 12, 13 & 14	COUNTY WINNEBAGO JOB# R-92-002-10
DRAWER 48 FOLDER 4		DRAWN - MP	REVISED -		SEC 78R-2	T 44 N, R 1 E OF 3RD P.M.	PROJECT# Sheet 578 of 926
	PLOT SCALE = 1"=20'	CHECKED - CF	REVISED -		SCALE: 1" = 20'	SHEET NO. E5	STA 555+00 TO STA 560+50 CONTRACT NO. 64C21
	PLOT DATE = 3/31/2014	DATE - -	REVISED -				

APR 0 1 2014

Township 44 North, Range 1 East of the 3rd P.M.

SEE SHEET 8

Ignacio Moreno & Olga Moreno

PARCEL 027/6 7,370 Sq. Ft.

Lot 10 in Block 1 in E. H. Marsh's Park View Subdivision

Total Area	7,370 Sq. Ft.
Total Area Req'd	7,370 Sq. Ft.
Area in Exist. Rdwy.	0 Sq. Ft.
Net Area Req'd	7,370 Sq. Ft.
Area Remaining	0 Sq. Ft.

Josephine M. Deery, Trustee

PARCEL 028/6 8,752 Sq. Ft.

Part of Lots 8 and 9 in Block 1 in Resurvey and Rearrangement of E. H. Marsh's Park View Subdivision

Total Area	21,989 Sq. Ft.
Total Area Req'd	8,752 Sq. Ft.
Area in Exist. Rdwy.	0 Sq. Ft.
Net Area Req'd	8,752 Sq. Ft.
Area Remaining	13,237 Sq. Ft.

Phillip J. Locascio

PARCEL 031/6 507 Sq. Ft.

Part of Lot 7 in Block 1 in Resurvey and Rearrangement of E. H. Marsh's Park View Subdivision

Total Area	7,303 Sq. Ft.
Total Area Req'd	507 Sq. Ft.
Area in Exist. Rdwy.	0 Sq. Ft.
Net Area Req'd	507 Sq. Ft.
Area Remaining	6,796 Sq. Ft.

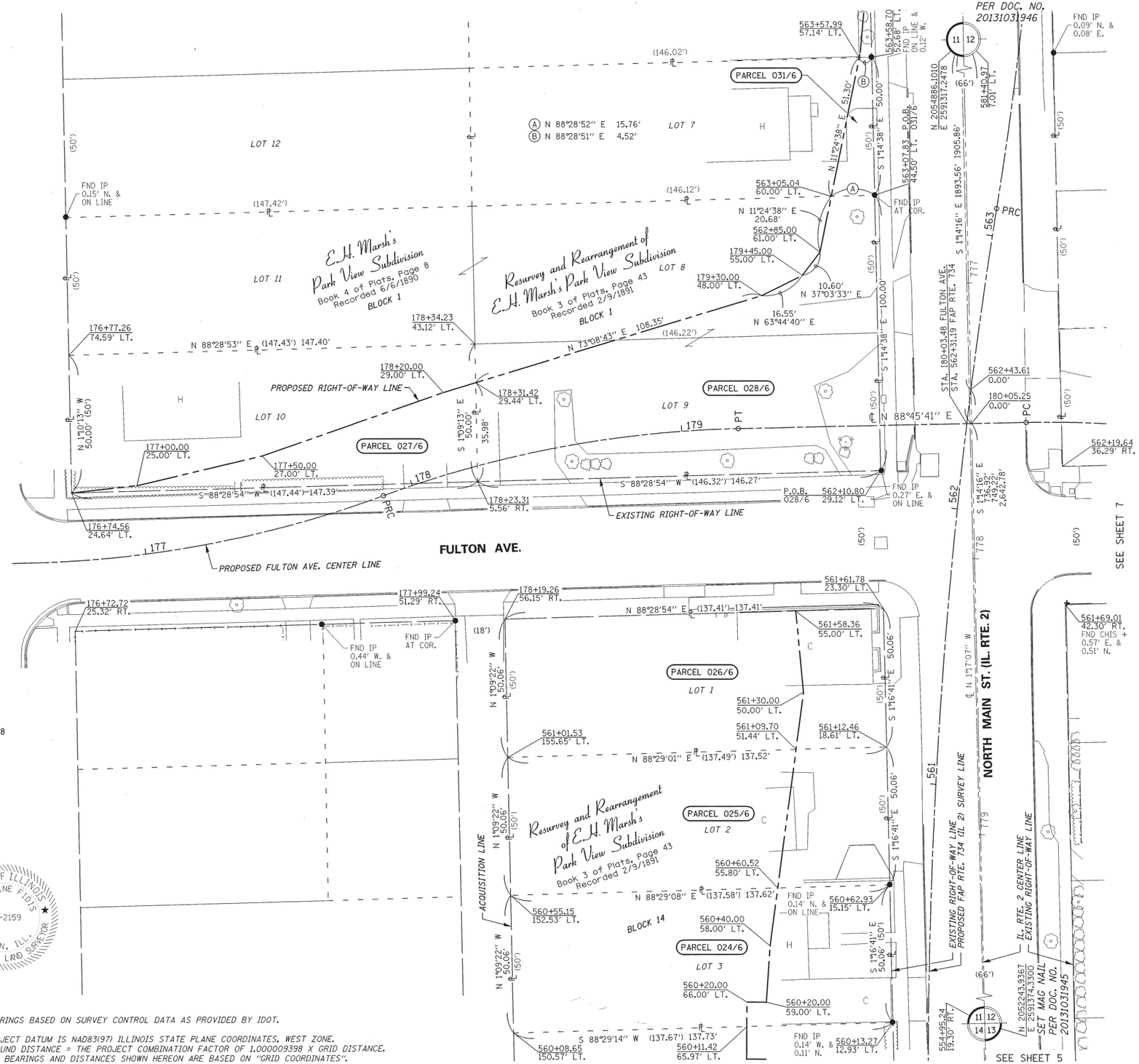

PROPOSED FAP RTE. 734 CURVE DATA
PI STA. = 560+32.94
Δ = 15°58'47" (RT)
D = 2°51'53"
R = 2,000.00'
T = 280.72'
L = 557.80'
E = 19.60'
P.R.C. STA = 557+52.22
P.R.C. STA = 563+10.02

PROPOSED FULTON AVE. CURVE DATA
PI STA. = 177+24.70
Δ = 18°34'50" (LT)
D = 14°19'26"
R = 400.00'
T = 65.43'
L = 129.72'
E = 5.32'
P.C. STA = 176+59.26
P.R.C. STA = 177+88.98

PROPOSED FULTON AVE. CURVE DATA
PI STA. = 178+55.33
Δ = 18°50'14" (RT)
D = 14°19'26"
R = 400.00'
T = 66.35'
L = 131.51'
E = 5.47'
P.R.C. STA = 177+88.98
P.T. STA = 179+20.49

Robert W. Krenek & Bette A. Krenek

PARCEL 024/6 6,892 Sq. Ft.

Lot 3 in Block 14 in Resurvey and Rearrangement of the East Half of Blocks 1 and 14 of E. H. Marsh's Park View Subdivision

Total Area	6,892 Sq. Ft.
Total Area Req'd	6,892 Sq. Ft.
Area in Exist. Rdwy.	0 Sq. Ft.
Net Area Req'd	6,892 Sq. Ft.
Area Remaining	0 Sq. Ft.

First National Bank & Trust Company of Rockford, Trustee

PARCEL 025/6 6,886 Sq. Ft.

Lot 2 in Block 14 in Resurvey and Rearrangement of the East Half of Blocks 1 and 14 of E. H. Marsh's Park View Subdivision

Total Area	6,886 Sq. Ft.
Total Area Req'd	6,886 Sq. Ft.
Area in Exist. Rdwy.	0 Sq. Ft.
Net Area Req'd	6,886 Sq. Ft.
Area Remaining	0 Sq. Ft.

Josephine M. Deery, Trustee

PARCEL 026/6 6,881 Sq. Ft.

Lot 1 in Block 14 in Resurvey and Rearrangement of the East Half of Blocks 1 and 14 of E. H. Marsh's Park View Subdivision

Total Area	6,881 Sq. Ft.
Total Area Req'd	6,881 Sq. Ft.
Area in Exist. Rdwy.	0 Sq. Ft.
Net Area Req'd	6,881 Sq. Ft.
Area Remaining	0 Sq. Ft.

SURVEYOR'S STATEMENT

I, COVENTINE FIDIS, HEREBY STATE THAT I AM A PROFESSIONAL LAND SURVEYOR OF THE STATE OF ILLINOIS; THAT THE SURVEY OF PROPOSED FAP ROUTE 734 WAS MADE BY ME OR UNDER MY DIRECT SUPERVISION; THAT THE LAND CORNER TIES AS SHOWN HEREON, ARE A TRUE AND CORRECT REPRESENTATION OF SAID SURVEY; AND THAT THE PLAT IS IN ACCORDANCE WITH THE LAND ACQUISITION POLICIES AND PROCEDURES MANUAL, OR THE DEPARTMENT'S DISTRICT POLICIES.

DATED THIS 31st DAY OF MARCH, 2014

STATE OF ILLINOIS COVENTINE FIDIS 35-2159 DIXON, ILL. PROFESSIONAL LAND SURVEYOR

COVENTINE FIDIS - ILLINOIS PROFESSIONAL LAND SURVEYOR NO. 35-2159
MY LICENSE EXPIRES 11/30/14

Notes: BEARINGS BASED ON SURVEY CONTROL DATA AS PROVIDED BY IDOT.

PROJECT DATUM IS NAD83(97) ILLINOIS STATE PLANE COORDINATES, WEST ZONE.
GROUND DISTANCE = THE PROJECT COMBINATION FACTOR OF 1.000009398 X GRID DISTANCE.
ALL BEARINGS AND DISTANCES SHOWN HEREON ARE BASED ON "GRID COORDINATES".

AMERICAN SURVEYING & ENGINEERING, P.C.
841 N. Galena Ave. Dixon, IL 61021
815-288-6231
ILLINOIS PROFESSIONAL DESIGN FIRM NO. 184-003192
ASE JOB # 112119

FILE NAME = D264C21-sht-rowplat06.dgn	USER NAME =	DESIGNED - GB	REVISED -	ILLINOIS DEPARTMENT OF TRANSPORTATION RIGHT-OF-WAY PLAT	FAP RTE 734 (IL 2)	LAND SECTION 11 & 12	COUNTY WINNEBAGO JOB# R-92-002-10
DRAWER 48 FOLDER 4		DRAWN - MP	REVISED -		SEC 78R-2	T 44 N. R 1 E OF 3RD P.M.	PROJECT# Sheet 579 of 926
	PLOT SCALE = 1"=20'	CHECKED - CF	REVISED -		SCALE: 1" = 20'	SHEET NO. 6	STA 560+50 TO STA 564+00 CONTRACT NO. 64C21
	PLOT DATE = 4/3/2014	DATE - -	REVISED -				

APR 3 2014

Township 44 North, Range 1 East of the 3rd P.M.

Josephine M. Deery, Trustee

PARCEL 028/E6 1,712 Sq. Ft.

Part of Lots 8 and 9 in Block 1 in Resurvey and Rearrangement of E. H. Marsh's Park View Subdivision

Temporary Easement for Grading and Shaping.

Plank Road, LLC

PARCEL 031/E6 625 Sq. Ft.

Part of Lot 7 in Block 1 in Resurvey and Rearrangement of E. H. Marsh's Park View Subdivision

Temporary Easement for Grading and Shaping.

Jay B. Hammell & Maria A. Hammell

PARCEL D7/E6 490 Sq. Ft.

Part of Lot 12 in Block 14 in E. H. Marsh's Park View Subdivision

Temporary Easement for Grading and Shaping and Entrance Construction.

Peter J. Peplos

PARCEL D8/E6 243 Sq. Ft.

Part of Lot 12 in Block 14 in E. H. Marsh's Park View Subdivision

Temporary Easement for Grading and Shaping.

(A)	S 1°02'13" E	5.20'
(B)	N 1°02'13" W	5.68'
(C)	S 1°09'22" E	4.94'
(D)	S 88°28'52" W	15.76'
(E)	N 88°28'51" E	17.06'
(F)	S 88°28'52" W	10.17'
(G)	S 11°24'38" W	20.68'

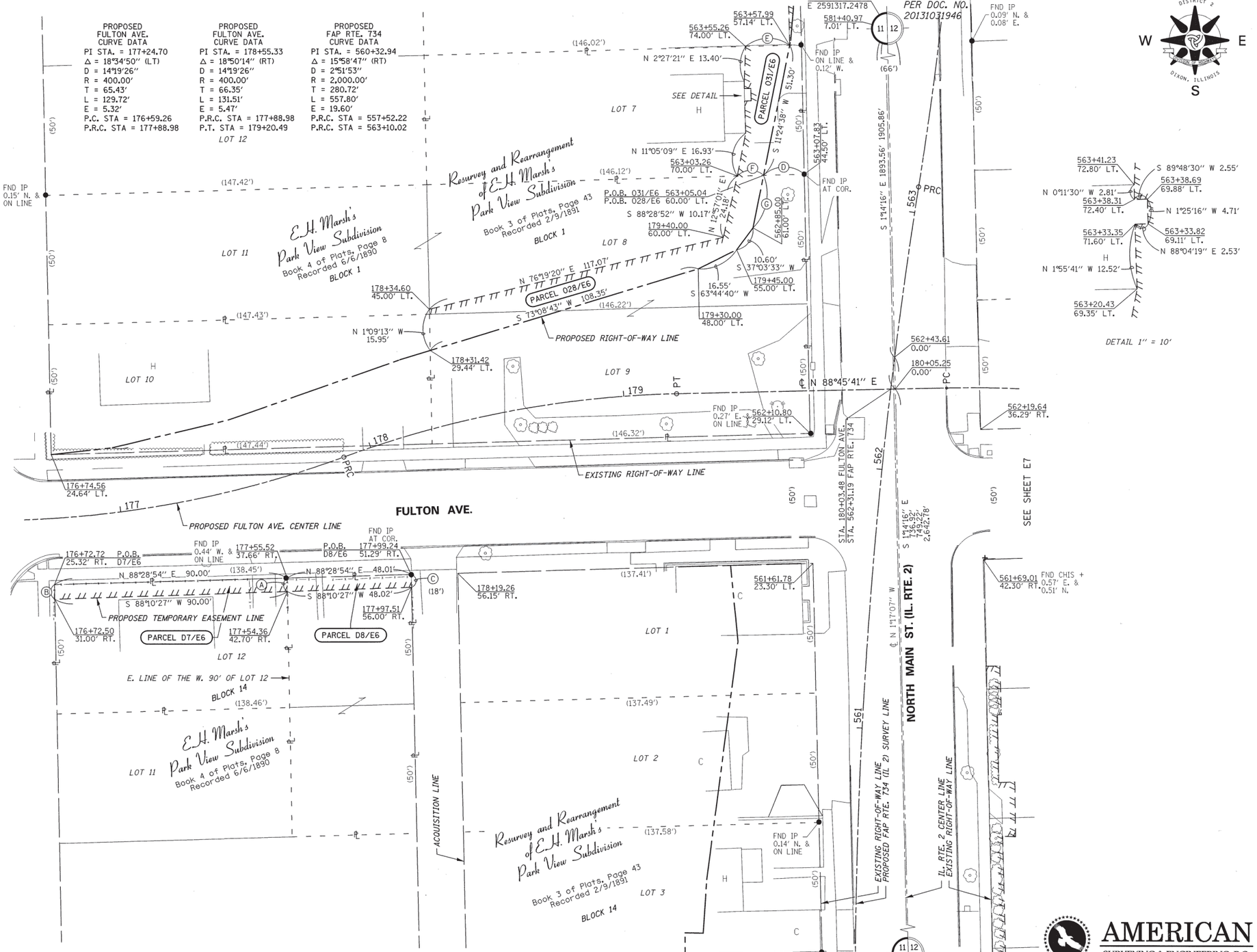

SURVEYOR'S STATEMENT

I, COVENTINE FIDIS, HEREBY STATE THAT I AM A PROFESSIONAL LAND SURVEYOR OF THE STATE OF ILLINOIS; THAT THE SURVEY OF PROPOSED FAP ROUTE 734 WAS MADE BY ME OR UNDER MY DIRECT SUPERVISION; THAT THE LAND CORNER TIES AS SHOWN HEREON, ARE A TRUE AND CORRECT REPRESENTATION OF SAID SURVEY; AND THAT THE PLAT IS IN ACCORDANCE WITH THE LAND ACQUISITION POLICIES AND PROCEDURES MANUAL, OR THE DEPARTMENT'S DISTRICT POLICIES.

DATED THIS 9th DAY OF OCTOBER, 2014

STATE OF ILLINOIS · COVENTINE FIDIS · 35-2159 · DIXON, ILL. · PROFESSIONAL LAND SURVEYOR

COVENTINE FIDIS - ILLINOIS PROFESSIONAL LAND SURVEYOR NO. 35-2159
MY LICENSE EXPIRES 11/30/14

Notes: BEARINGS BASED ON SURVEY CONTROL DATA AS PROVIDED BY IDOT.

PROJECT DATUM IS NAD83(97) ILLINOIS STATE PLANE COORDINATES, WEST ZONE.
GROUND DISTANCE = THE PROJECT COMBINATION FACTOR OF 1.000009398 X GRID DISTANCE.
ALL BEARINGS AND DISTANCES SHOWN HEREON ARE BASED ON "GRID COORDINATES".

AMERICAN
SURVEYING & ENGINEERING, P.C.
841 N. Galena Ave. Dixon, IL 61021
815-288-6231
ILLINOIS PROFESSIONAL DESIGN FIRM NO. 184-003192
ASE JOB # 112119

FILE NAME = D264C21-sht-rowplat06E.dgn	USER NAME =	DESIGNED - GB	REVISED -	ILLINOIS DEPARTMENT OF TRANSPORTATION EASEMENT PLAT	FAP RTE 734 (IL 2)	LAND SECTION 11 & 12	COUNTY WINNEBAGO JOB# R-92-002-10
DRAWER 48 FOLDER 4		DRAWN - MP	REVISED -		SEC 78R-2	T 44 N, R 1 E OF 3RD P.M.	PROJECT# Sheet 580 of 926
	PLOT SCALE = 1"=20'	CHECKED - CF	REVISED -		SCALE: 1" = 20'	SHEET NO. E6	STA 560+50 TO STA 564+00 CONTRACT NO. 64C21
	PLOT DATE = 10/10/2014	DATE - 7/16/13	REVISED -				

OCT 10 2014

Township 44 North, Range 1 East of the 3rd P.M.

Josephine M. Deery, Trustee

PARCEL 029/7 3,751 Sq. Ft.

The West 75 feet of Lot 12 in Block 8 in Resurvey and Rearrangement of Edgewater Subdivision

Total Area	3,751 Sq. Ft.
Total Area Req'd	3,751 Sq. Ft.
Area in Exist. Rdwy.	0 Sq. Ft.
Net Area Req'd	3,751 Sq. Ft.
Area Remaining	0 Sq. Ft.

David C. Replogle & Patricia Replogle

PARCEL 030/7 3,990 Sq. Ft.

Part of Lots 13, 14 and 15 in Block 8 in Resurvey and Rearrangement of Edgewater Subdivision

Total Area	31,449 Sq. Ft.
Total Area Req'd	3,990 Sq. Ft.
Area in Exist. Rdwy.	0 Sq. Ft.
Net Area Req'd	3,990 Sq. Ft.
Area Remaining	27,459 Sq. Ft.

David C. Replogle

PARCEL 078/7 2,522 Sq. Ft.

Part of Lot 12 in Block 8 in Resurvey and Rearrangement of Edgewater Subdivision

Total Area	6,725 Sq. Ft.
Total Area Req'd	2,522 Sq. Ft.
Area in Exist. Rdwy.	0 Sq. Ft.
Net Area Req'd	2,522 Sq. Ft.
Area Remaining	4,203 Sq. Ft.

PROPOSED FAP RTE. 734 CURVE DATA	PROPOSED FULTON AVE. CURVE DATA
PI STA. = 560+32.94	PI STA. = 180+89.20
Δ = 15°58'47" (RT)	Δ = 18°13'06" (RT)
D = 2°51'53"	D = 14°19'26"
R = 2,000.00'	R = 400.00'
T = 280.72'	T = 64.14'
L = 557.80'	L = 127.19'
E = 19.60'	E = 5.11'
P.R.C. STA = 557+52.22	P.C. STA = 180+25.07
P.R.C. STA = 563+10.02	P.R.C. STA = 181+52.26

PROPOSED FULTON AVE. CURVE DATA

PI STA. = 182+17.31
Δ = 18°28'30" (LT)
D = 14°19'26"
R = 400.00'
T = 65.05'
L = 128.98'
E = 5.26'
P.R.C. STA = 181+52.26
P.T. STA = 182+81.24

SURVEYOR'S STATEMENT

I, COVENTINE FIDIS, HEREBY STATE THAT I AM A PROFESSIONAL LAND SURVEYOR OF THE STATE OF ILLINOIS; THAT THE SURVEY OF PROPOSED FAP ROUTE 734 WAS MADE BY ME OR UNDER MY DIRECT SUPERVISION; THAT THE LAND CORNER TIES AS SHOWN HEREON, ARE A TRUE AND CORRECT REPRESENTATION OF SAID SURVEY; AND THAT THE PLAT IS IN ACCORDANCE WITH THE LAND ACQUISITION POLICIES AND PROCEDURES MANUAL, OR THE DEPARTMENT'S DISTRICT POLICIES.

DATED THIS 31st DAY OF MARCH, 2014

COVENTINE FIDIS - ILLINOIS PROFESSIONAL LAND SURVEYOR NO. 35-2159
MY LICENSE EXPIRES 11/30/14

Notes: BEARINGS BASED ON SURVEY CONTROL DATA AS PROVIDED BY IDOT.

PROJECT DATUM IS NAD83(97) ILLINOIS STATE PLANE COORDINATES, WEST ZONE.
GROUND DISTANCE = THE PROJECT COMBINATION FACTOR OF 1.000009398 X GRID DISTANCE.
ALL BEARINGS AND DISTANCES SHOWN HEREON ARE BASED ON "GRID COORDINATES".

AMERICAN
SURVEYING & ENGINEERING, P.C.
841 N. Galena Ave. Dixon, IL 61021
815-288-6231
ILLINOIS PROFESSIONAL DESIGN FIRM NO. 184-003192
ASE JOB # 112119

FILE NAME = D264C21-sht-rowplat06.dgn	USER NAME =	DESIGNED - GB	REVISED -
DRAWER 48 FOLDER 4		DRAWN - MP	REVISED -
	PLOT SCALE = 1"=20'	CHECKED - CF	REVISED -
	PLOT DATE = 3/31/2014	DATE - -	REVISED -

ILLINOIS DEPARTMENT OF TRANSPORTATION
RIGHT-OF-WAY PLAT

FAP RTE 734 (IL 2)	LAND SECTION 11 & 12	COUNTY WINNEBAGO	JOB# R-92-002-10
SEC 78R-2	T 44 N, R 1 E OF 3RD P.M.	PROJECT#	Sheet 581 of 926
SCALE: 1" = 20'	SHEET NO. 7	STA 560+50 TO STA 564+00	CONTRACT NO. 64C21

APR 0 1 2014 APR 0 1 2014

Township 44 North, Range 1 East of the 3rd P.M.

David C. Replogle & Patricia Replogle
PARCEL 030/E7 1,582 Sq. Ft.

Part of Lots 13, 14 & 15 in Block 8 in Resurvey and Rearrangement of Edgewater Subdivision

Temporary Easement for Grading and Shaping.

Susan A. Leander & Norman L. Leander
PARCEL B9/E7 877 Sq. Ft.

Part of Lot 12 in Block 9 in Resurvey and Rearrangement of Edgewater Subdivision

Temporary Easement for Grading and Shaping.

Roger Rudolph
PARCEL C1/E7 1,007 SQ. FT.

Part of Lot 1 in Block 9 in Edgewater Subdivision

Temporary Easement for Grading and Shaping.

NOT REQ'D
Commonwealth Edison Company
PARCEL C2/E7 578 SQ. FT.

Part of Lot 11 in Block 8 in Edgewater Subdivision

Temporary Easement for Grading and Shaping.

NOT REQ'D
Ingersoll Real Estate, LLC
PARCEL C3/E7 603 SQ. FT.

Part of Lot 11 in Block 8 in Edgewater Subdivision

Temporary Easement for Grading and Shaping.

PROPOSED FAP RTE. 734 CURVE DATA	PROPOSED FULTON AVE. CURVE DATA	PROPOSED FULTON AVE. CURVE DATA
PI STA. = 560+32.94	PI STA. = 180+89.20	PI STA. = 182+17.31
Δ = 15°58'47" (RT)	Δ = 18°13'06" (RT)	Δ = 18°28'30" (LT)
D = 2°51'53"	D = 14°19'26"	D = 14°19'26"
R = 2,000.00'	R = 400.00'	R = 400.00'
T = 280.72'	T = 64.14'	T = 65.05'
L = 557.80'	L = 127.19'	L = 128.98'
E = 19.60'	E = 5.11'	E = 5.26'
P.R.C. STA = 557+52.22	P.C. STA = 180+25.07	P.R.C. STA = 181+52.26
P.R.C. STA = 563+10.02	P.R.C. STA = 181+52.26	P.T. STA = 182+81.24

SURVEYOR'S STATEMENT

I, COVENTINE FIDIS, HEREBY STATE THAT I AM A PROFESSIONAL LAND SURVEYOR OF THE STATE OF ILLINOIS; THAT THE SURVEY OF PROPOSED FAP ROUTE 734 WAS MADE BY ME OR UNDER MY DIRECT SUPERVISION; THAT THE LAND CORNER TIES AS SHOWN HEREON, ARE A TRUE AND CORRECT REPRESENTATION OF SAID SURVEY; AND THAT THE PLAT IS IN ACCORDANCE WITH THE LAND ACQUISITION POLICIES AND PROCEDURES MANUAL, OR THE DEPARTMENT'S DISTRICT POLICIES.

DATED THIS 31st DAY OF MARCH, 2014

STATE OF ILLINOIS · COVENTINE FIDIS · 35-2159 · DIXON, ILL. · PROFESSIONAL LAND SURVEYOR

COVENTINE FIDIS - ILLINOIS PROFESSIONAL LAND SURVEYOR NO. 35-2159
MY LICENSE EXPIRES 11/30/14

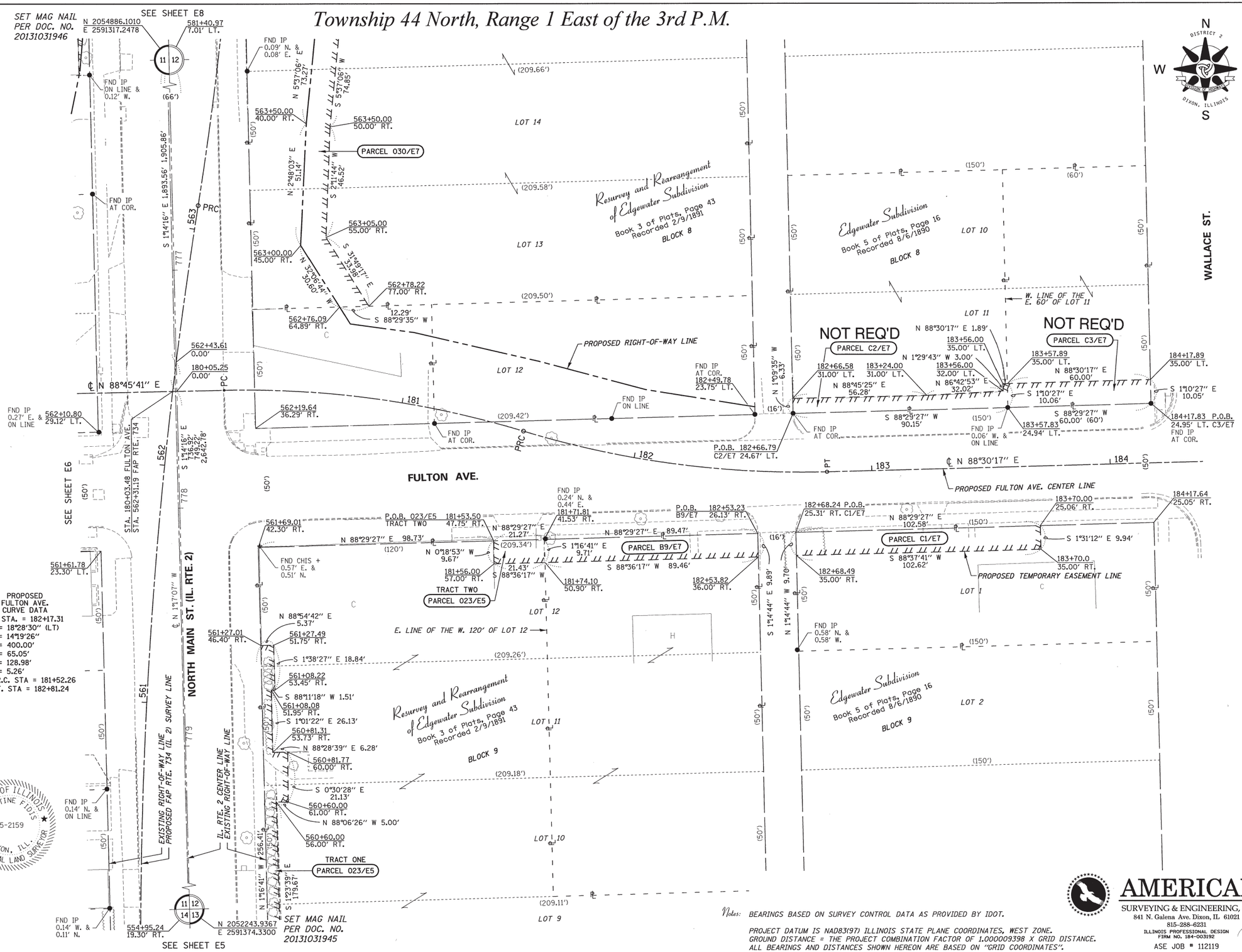

Notes: BEARINGS BASED ON SURVEY CONTROL DATA AS PROVIDED BY IDOT.

PROJECT DATUM IS NAD83(97) ILLINOIS STATE PLANE COORDINATES, WEST ZONE.
GROUND DISTANCE = THE PROJECT COMBINATION FACTOR OF 1.000009398 X GRID DISTANCE.
ALL BEARINGS AND DISTANCES SHOWN HEREON ARE BASED ON "GRID COORDINATES".

AMERICAN
SURVEYING & ENGINEERING, P.C.
841 N. Galena Ave. Dixon, IL 61021
815-288-6231
ILLINOIS PROFESSIONAL DESIGN FIRM NO. 184-003192
ASE JOB # 112119

FILE NAME = D264C21-sht-rowplat06E.dgn	USER NAME =	DESIGNED - GB	REVISED -	ILLINOIS DEPARTMENT OF TRANSPORTATION EASEMENT PLAT	FAP RTE 734 (IL 2)	LAND SECTION 11 & 12	COUNTY WINNEBAGO JOB# R-92-002-10
DRAWER 48 FOLDER 4		DRAWN - MP	REVISED -		SEC 78R-2	T 44 N, R 1 E OF 3RD P.M.	PROJECT# Sheet 582 of 926
	PLOT SCALE = 1"=20'	CHECKED - CF	REVISED -		SCALE: 1" = 20'	SHEET NO. E7	STA 560+50 TO STA 564+00 CONTRACT NO. 64C21
	PLOT DATE = 3/31/2014	DATE - 7/16/13	REVISED -				

APR 0 1 2014

Township 44 North, Range 1 East of the 3rd P.M.

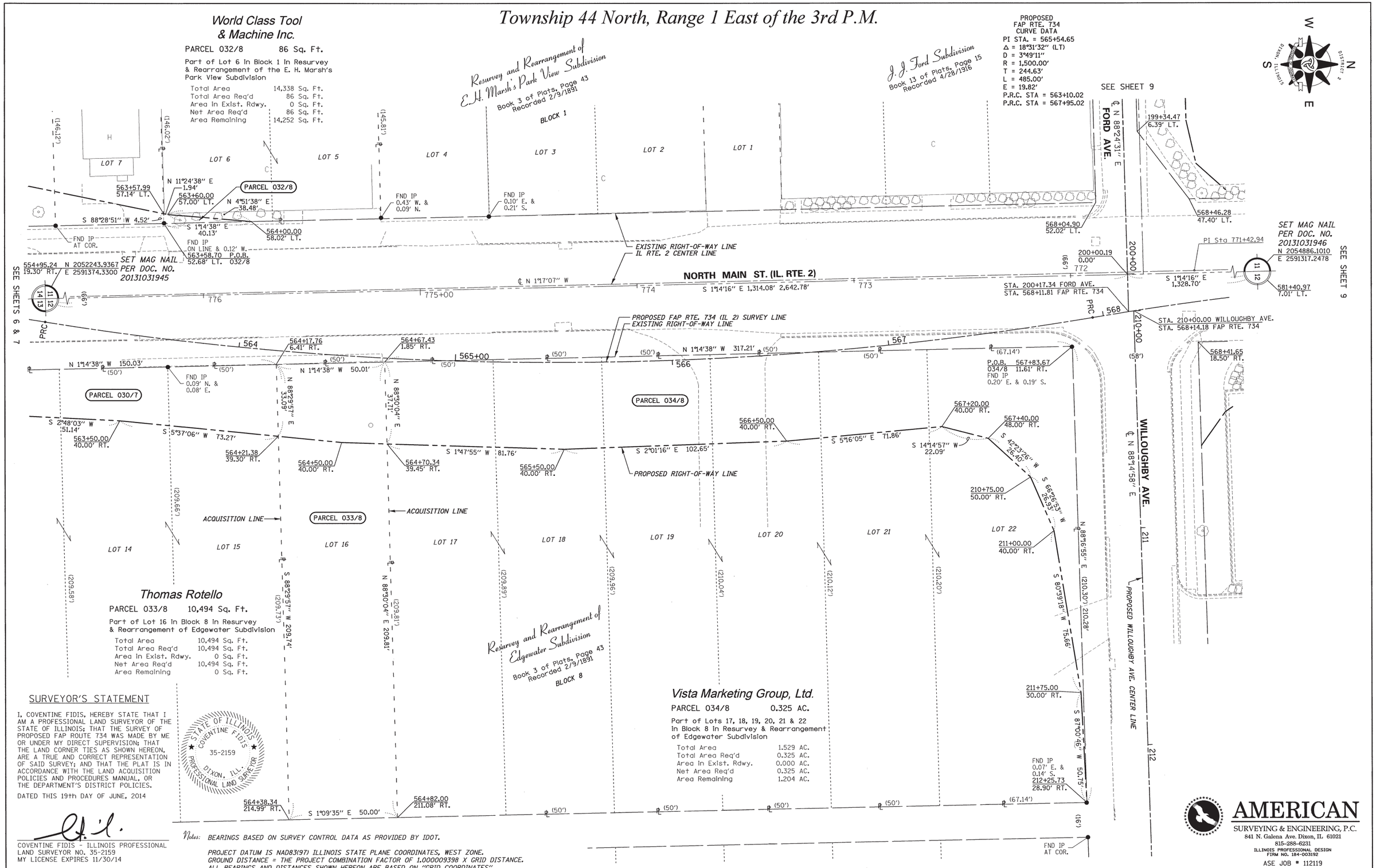

SURVEYOR'S STATEMENT

I, COVENTINE FIDIS, HEREBY STATE THAT I AM A PROFESSIONAL LAND SURVEYOR OF THE STATE OF ILLINOIS; THAT THE SURVEY OF PROPOSED FAP ROUTE 734 WAS MADE BY ME OR UNDER MY DIRECT SUPERVISION; THAT THE LAND CORNER TIES AS SHOWN HEREON, ARE A TRUE AND CORRECT REPRESENTATION OF SAID SURVEY; AND THAT THE PLAT IS IN ACCORDANCE WITH THE LAND ACQUISITION POLICIES AND PROCEDURES MANUAL, OR THE DEPARTMENT'S DISTRICT POLICIES.

DATED THIS 19th DAY OF JUNE, 2014

COVENTINE FIDIS - ILLINOIS PROFESSIONAL LAND SURVEYOR NO. 35-2159
MY LICENSE EXPIRES 11/30/14

Notes: BEARINGS BASED ON SURVEY CONTROL DATA AS PROVIDED BY IDOT.

PROJECT DATUM IS NAD83(97) ILLINOIS STATE PLANE COORDINATES, WEST ZONE.
GROUND DISTANCE = THE PROJECT COMBINATION FACTOR OF 1.000009398 X GRID DISTANCE.
ALL BEARINGS AND DISTANCES SHOWN HEREON ARE BASED ON "GRID COORDINATES".

FILE NAME = D264C21-sht-rowplat08.dgn	USER NAME =	DESIGNED - GB	REVISED -	ILLINOIS DEPARTMENT OF TRANSPORTATION RIGHT-OF-WAY PLAT	FAP RTE 734 (IL 2)	LAND SECTION 11 & 12	COUNTY WINNEBAGO JOB# R-92-002-10
DRAWER 48 FOLDER 4		DRAWN - MP	REVISED -		SEC 78R-2	T 44 N, R 1 E OF 3RD P.M.	PROJECT# Sheet 583 of 926
	PLOT SCALE = 1"=20'	CHECKED - CF	REVISED -		SCALE: 1" = 20'	SHEET NO. 8	STA 564+00 TO STA 568+00 CONTRACT NO. 64C21
	PLOT DATE = 9/10/2014	DATE - 7/16/13	REVISED -				

SEP 11 2014

Township 44 North, Range 1 East of the 3rd P.M.

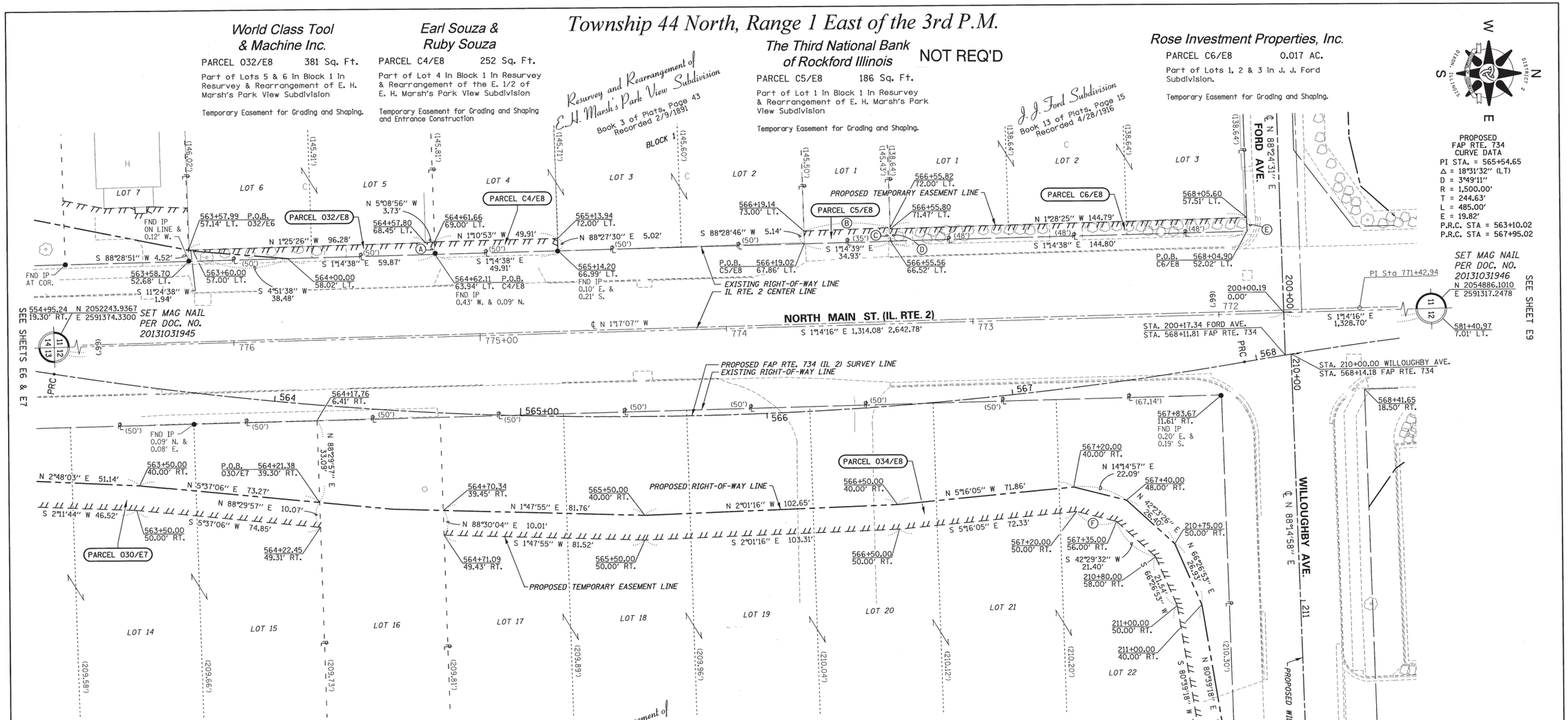

SURVEYOR'S STATEMENT

I, COVENTINE FIDIS, HEREBY STATE THAT I AM A PROFESSIONAL LAND SURVEYOR OF THE STATE OF ILLINOIS; THAT THE SURVEY OF PROPOSED FAP ROUTE 734 WAS MADE BY ME OR UNDER MY DIRECT SUPERVISION; THAT THE LAND CORNER TIES AS SHOWN HEREON, ARE A TRUE AND CORRECT REPRESENTATION OF SAID SURVEY; AND THAT THE PLAT IS IN ACCORDANCE WITH THE LAND ACQUISITION POLICIES AND PROCEDURES MANUAL, OR THE DEPARTMENT'S DISTRICT POLICIES.

DATED THIS 19th DAY OF JUNE, 2014

STATE OF ILLINOIS ★ COVENTINE FIDIS ★ 35-2159 DIXON, ILL. PROFESSIONAL LAND SURVEYOR

COVENTINE FIDIS - ILLINOIS PROFESSIONAL LAND SURVEYOR NO. 35-2159
MY LICENSE EXPIRES 11/30/14

Notes: BEARINGS BASED ON SURVEY CONTROL DATA AS PROVIDED BY IDOT.

PROJECT DATUM IS NAD83(97) ILLINOIS STATE PLANE COORDINATES, WEST ZONE.
GROUND DISTANCE = THE PROJECT COMBINATION FACTOR OF 1.000009398 X GRID DISTANCE.
ALL BEARINGS AND DISTANCES SHOWN HEREON ARE BASED ON "GRID COORDINATES".

AMERICAN SURVEYING & ENGINEERING, P.C.
841 N. Galena Ave. Dixon, IL 61021
815-288-6231
ILLINOIS PROFESSIONAL DESIGN FIRM NO. 184-003192
ASE JOB # 112119

FILE NAME = D264C21-sht-rowplat08E.dgn	USER NAME =	DESIGNED - GB	REVISED -	ILLINOIS DEPARTMENT OF TRANSPORTATION EASEMENT PLAT	FAP RTE 734 (IL 2)	LAND SECTION 11 & 12	COUNTY WINNEBAGO JOB# R-92-002-10
DRAWER 48 FOLDER 4		DRAWN - MP	REVISED -		SEC 78R-2	T 44 N, R 1 E OF 3RD P.M.	PROJECT# Sheet 584 of 926
	PLOT SCALE = 1"=20'	CHECKED - CF	REVISED -		SCALE: 1" = 20'	SHEET NO. E8	STA 564+00 TO STA 568+00 CONTRACT NO. 64C21
	PLOT DATE = 9/10/2014	DATE - 7/16/13	REVISED -				

SEP 11 2014

Township 44 North, Range 1 East of the 3rd P.M.

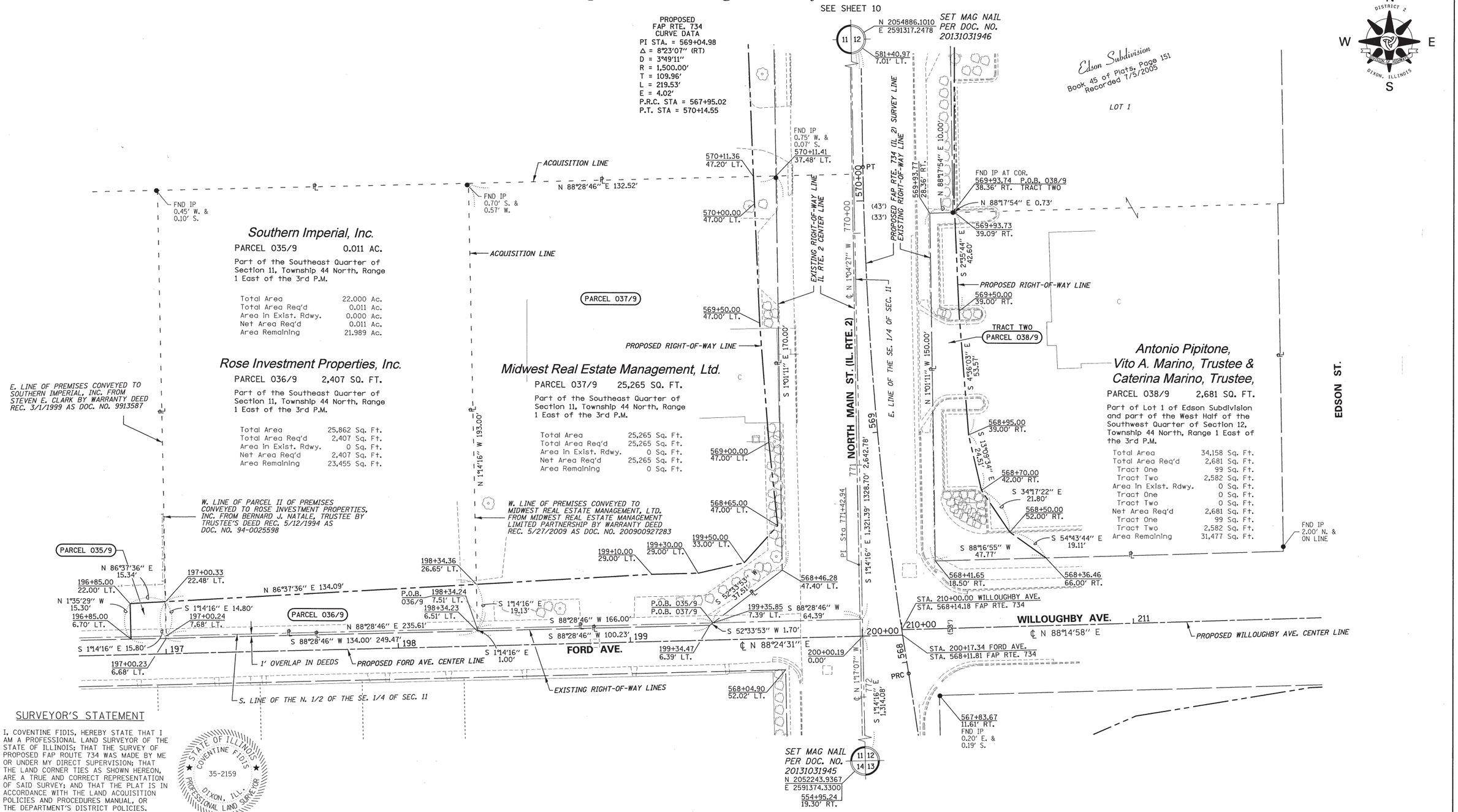

SURVEYOR'S STATEMENT

I, COVENTINE FIDIS, HEREBY STATE THAT I AM A PROFESSIONAL LAND SURVEYOR OF THE STATE OF ILLINOIS; THAT THE SURVEY OF PROPOSED FAP ROUTE 734 WAS MADE BY ME OR UNDER MY DIRECT SUPERVISION; THAT THE LAND CORNER TIES AS SHOWN HEREON, ARE A TRUE AND CORRECT REPRESENTATION OF SAID SURVEY; AND THAT THE PLAT IS IN ACCORDANCE WITH THE LAND ACQUISITION POLICIES AND PROCEDURES MANUAL, OR THE DEPARTMENT'S DISTRICT POLICIES.

DATED THIS 3RD DAY OF JUNE, 2014

STATE OF ILLINOIS COVENTINE FIDIS 35-2159 DIXON, ILL. PROFESSIONAL LAND SURVEYOR

COVENTINE FIDIS - ILLINOIS PROFESSIONAL LAND SURVEYOR NO. 35-2159
MY LICENSE EXPIRES 11/30/14

Notes: BEARINGS BASED ON SURVEY CONTROL DATA AS PROVIDED BY IDOT.

PROJECT DATUM IS NAD83(97) ILLINOIS STATE PLANE COORDINATES, WEST ZONE.
GROUND DISTANCE = THE PROJECT COMBINATION FACTOR OF 1.000009398 X GRID DISTANCE.
ALL BEARINGS AND DISTANCES SHOWN HEREON ARE BASED ON "GRID COORDINATES".

AMERICAN SURVEYING & ENGINEERING, P.C.
841 N. Galena Ave. Dixon, IL 61021
815-288-6231
ILLINOIS PROFESSIONAL DESIGN FIRM NO. 184-003192
ASE JOB # 112119

FILE NAME = D264C21-sht-rowplat09.dgn	USER NAME =	DESIGNED - GB	REVISED -	ILLINOIS DEPARTMENT OF TRANSPORTATION RIGHT-OF-WAY PLAT	FAP RTE 734 (IL 2)	LAND SECTION 11 & 12	COUNTY WINNEBAGO JOB# R-92-002-10
DRAWER 48 FOLDER 4		DRAWN - CH	REVISED -		SEC 78R-2	T 44 N, R 1 E OF 3RD P.M.	PROJECT# Sheet 585 of 926
	PLOT SCALE = 1"=20'	CHECKED - CF	REVISED -		SCALE: 1" = 20'	SHEET NO. 9	STA 568+00 TO STA 570+00 CONTRACT NO. 64C21
	PLOT DATE = 6/3/2014	DATE - 7/17/13	REVISED -				

JUN 04 2014

Township 44 North, Range 1 East of the 3rd P.M.

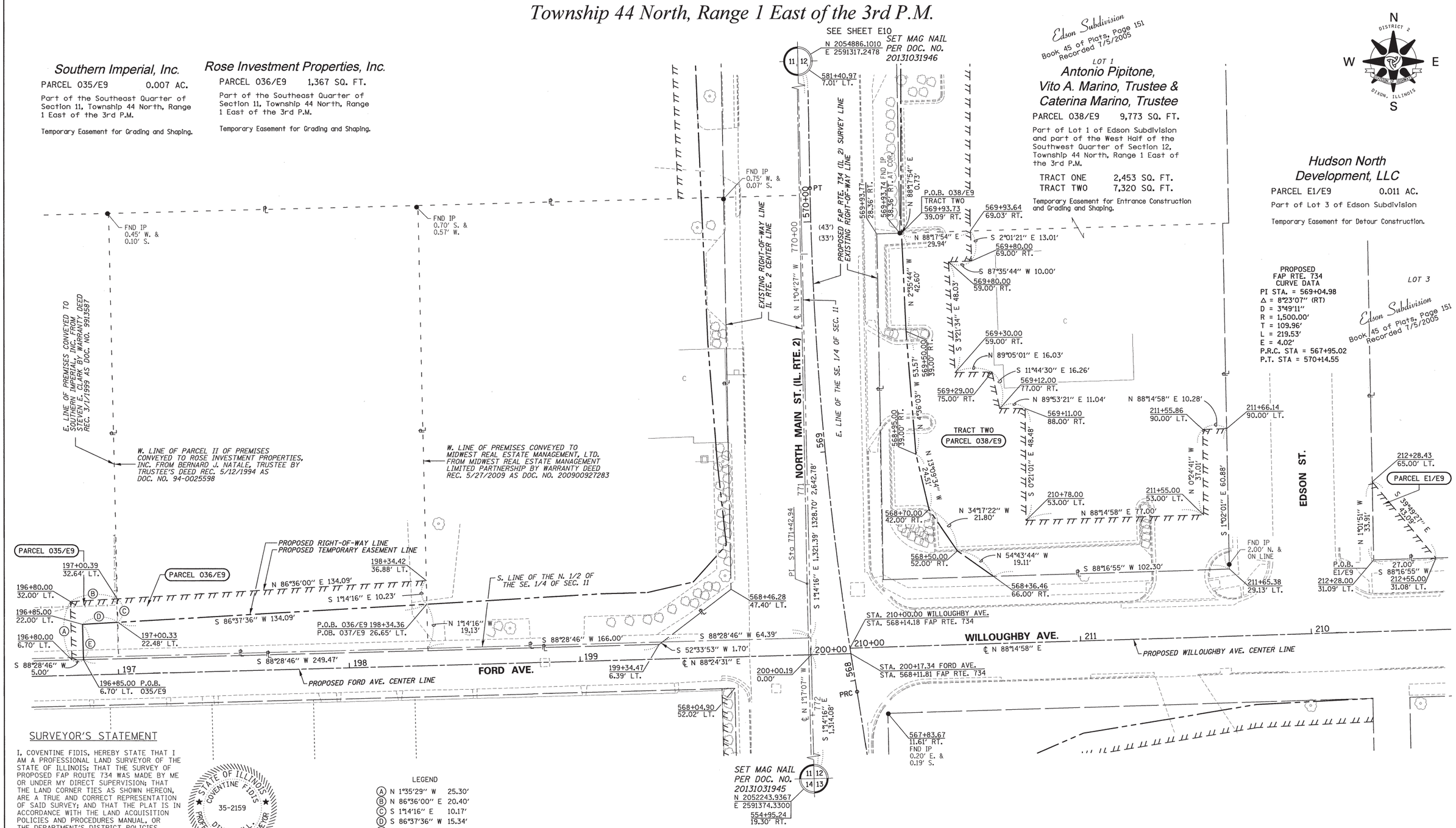

SURVEYOR'S STATEMENT

I, COVENTINE FIDIS, HEREBY STATE THAT I AM A PROFESSIONAL LAND SURVEYOR OF THE STATE OF ILLINOIS; THAT THE SURVEY OF PROPOSED FAP ROUTE 734 WAS MADE BY ME OR UNDER MY DIRECT SUPERVISION; THAT THE LAND CORNER TIES AS SHOWN HEREON, ARE A TRUE AND CORRECT REPRESENTATION OF SAID SURVEY; AND THAT THE PLAT IS IN ACCORDANCE WITH THE LAND ACQUISITION POLICIES AND PROCEDURES MANUAL, OR THE DEPARTMENT'S DISTRICT POLICIES.

DATED THIS 3RD DAY OF JUNE, 2014

STATE OF ILLINOIS COVENTINE FIDIS 35-2159 DIXON, ILL. PROFESSIONAL LAND SURVEYOR

COVENTINE FIDIS - ILLINOIS PROFESSIONAL LAND SURVEYOR NO. 35-2159
MY LICENSE EXPIRES 11/30/14

LEGEND

(A)	N 1°35'29" W	25.30'
(B)	N 86°36'00" E	20.40'
(C)	S 1°14'16" E	10.17'
(D)	S 86°37'36" W	15.34'
(E)	S 1°35'29" E	15.30'

Notes: BEARINGS BASED ON SURVEY CONTROL DATA AS PROVIDED BY IDOT.

PROJECT DATUM IS NAD83(97) ILLINOIS STATE PLANE COORDINATES, WEST ZONE.
GROUND DISTANCE = THE PROJECT COMBINATION FACTOR OF 1.000009398 X GRID DISTANCE.
ALL BEARINGS AND DISTANCES SHOWN HEREON ARE BASED ON "GRID COORDINATES".

AMERICAN SURVEYING & ENGINEERING, P.C.
841 N. Galena Ave. Dixon, IL 61021
815-288-6231
ILLINOIS PROFESSIONAL DESIGN FIRM NO. 184-003192
ASE JOB # 112119

FILE NAME = D264C21-sht-rowplat09E.dgn	USER NAME =	DESIGNED - GB	REVISED -	ILLINOIS DEPARTMENT OF TRANSPORTATION EASEMENT PLAT	FAP RTE 734 (IL 2)	LAND SECTION 11 & 12	COUNTY WINNEBAGO JOB# R-92-002-10
DRAWER 48 FOLDER 4		DRAWN - CH	REVISED -		SEC 78R-2	T 44 N, R 1 E OF 3RD P.M.	PROJECT# Sheet 586 of 926
	PLOT SCALE = 1"=20'	CHECKED - CF	REVISED -		SCALE: 1" = 20'	SHEET NO. E9	STA 568+00 TO STA 570+00 CONTRACT NO. 64C21
	PLOT DATE = 6/3/2014	DATE - 7/22/13	REVISED -				

JUN 04 2014

Township 44 North, Range 1 East of the 3rd P.M.

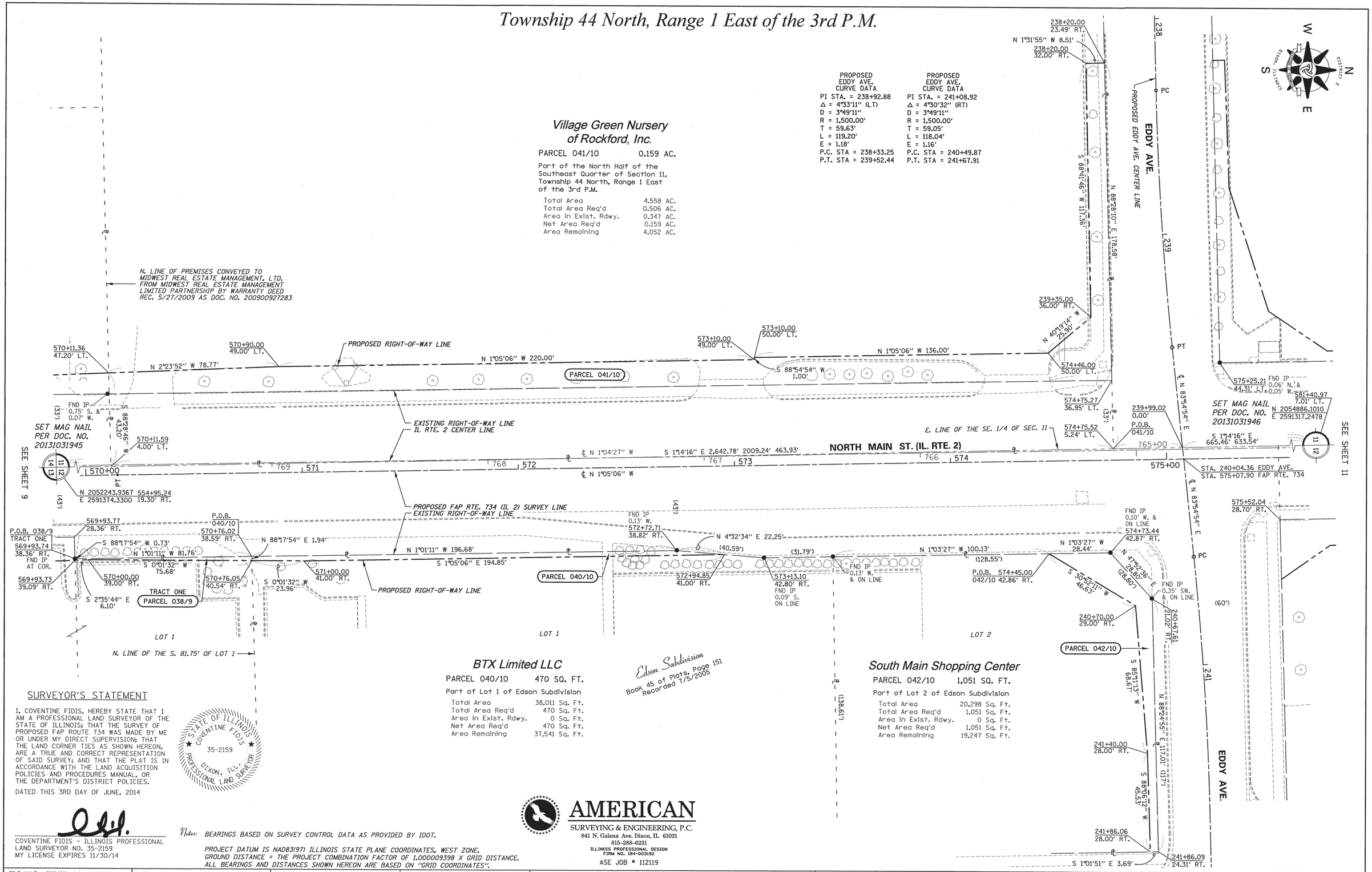

FILE NAME = D264C21-sht-rowplat10.dgn	USER NAME =	DESIGNED - GB	REVISED -	ILLINOIS DEPARTMENT OF TRANSPORTATION RIGHT-OF-WAY PLAT	FAP RTE 734 (IL 2)	LAND SECTION 11 & 12	COUNTY WINNEBAGO JOB# R-92-002-10
DRAWER 48 FOLDER 4		DRAWN - CH	REVISED -		SEC 78R-2	T 44 N, R 1 E OF 3RD P.M.	PROJECT# Sheet 587 of 926
	PLOT SCALE = 1"=20'	CHECKED - CF	REVISED -		SCALE: 1" = 20'	SHEET NO. 10	STA 570+00 TO STA 575+00 CONTRACT NO. 64C21
	PLOT DATE = 6/3/2014	DATE - 7/22/13	REVISED -				

JUN 04 2014

Township 44 North, Range 1 East of the 3rd P.M.

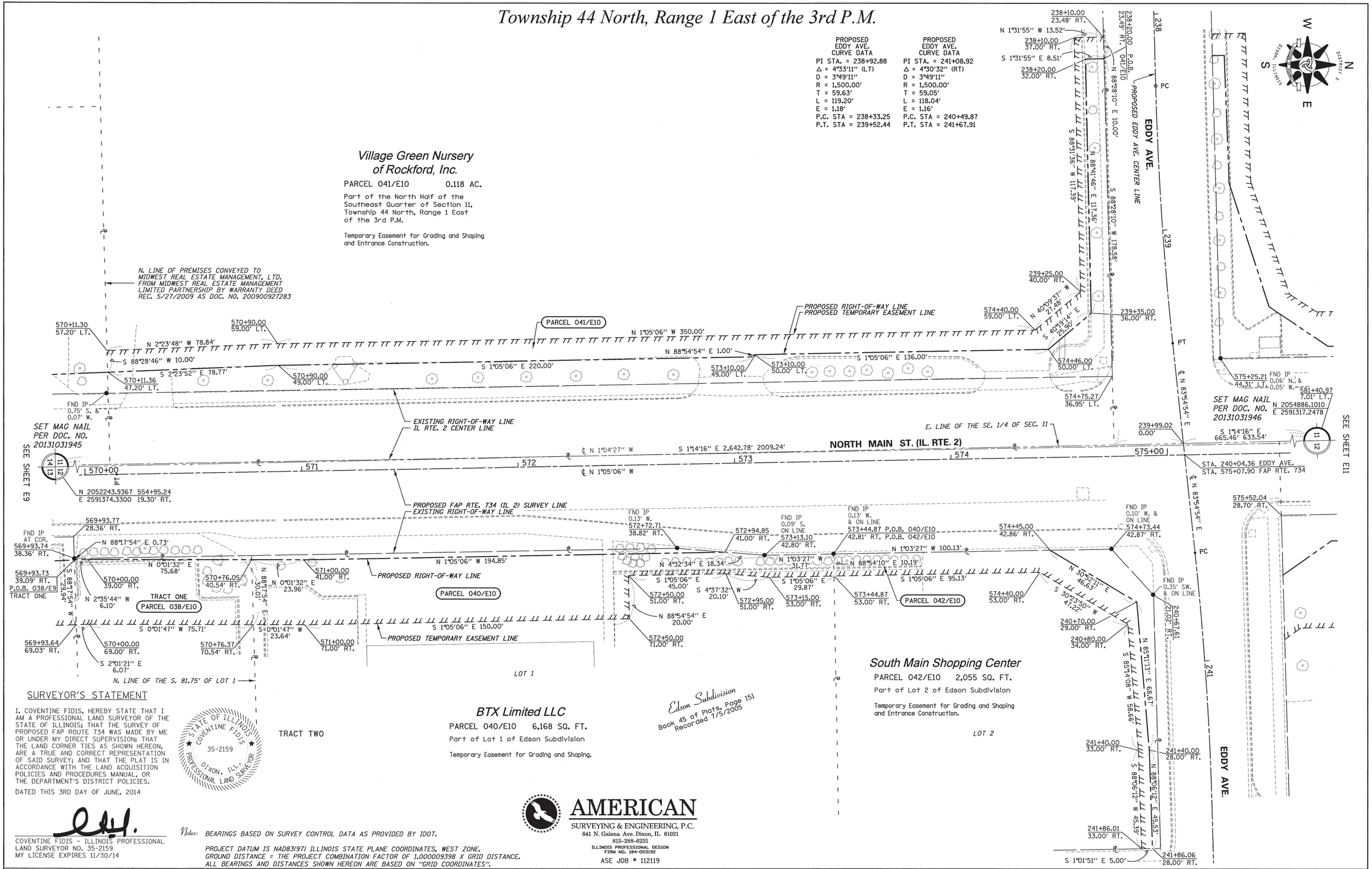

SURVEYOR'S STATEMENT

I, COVENTINE FIDIS, HEREBY STATE THAT I AM A PROFESSIONAL LAND SURVEYOR OF THE STATE OF ILLINOIS; THAT THE SURVEY OF PROPOSED FAP ROUTE 734 WAS MADE BY ME OR UNDER MY DIRECT SUPERVISION; THAT THE LAND CORNER TIES AS SHOWN HEREON, ARE A TRUE AND CORRECT REPRESENTATION OF SAID SURVEY; AND THAT THE PLAT IS IN ACCORDANCE WITH THE LAND ACQUISITION POLICIES AND PROCEDURES MANUAL, OR THE DEPARTMENT'S DISTRICT POLICIES.

DATED THIS 3RD DAY OF JUNE, 2014

COVENTINE FIDIS - ILLINOIS PROFESSIONAL LAND SURVEYOR NO. 35-2159
MY LICENSE EXPIRES 11/30/14

Notes: BEARINGS BASED ON SURVEY CONTROL DATA AS PROVIDED BY IDOT.

PROJECT DATUM IS NAD83(97) ILLINOIS STATE PLANE COORDINATES, WEST ZONE.
GROUND DISTANCE = THE PROJECT COMBINATION FACTOR OF 1.000009398 X GRID DISTANCE.
ALL BEARINGS AND DISTANCES SHOWN HEREON ARE BASED ON "GRID COORDINATES".

FILE NAME = D264C21-sht-rowplat10.dgn	USER NAME =	DESIGNED - GB	REVISED -	ILLINOIS DEPARTMENT OF TRANSPORTATION EASEMENT PLAT	FAP RTE 734 (IL 2)	LAND SECTION 11 & 12	COUNTY WINNEBAGO JOB# R-92-002-10
DRAWER 48 FOLDER 4		DRAWN - CH	REVISED -		SEC 78R-2	T 44 N, R 1 E OF 3RD P.M.	PROJECT# Sheet 588 of 926
	PLOT SCALE = 1"=20'	CHECKED - CF	REVISED -		SCALE: 1" = 20'	SHEET NO. E10	STA 570+00 TO STA 575+00 CONTRACT NO. 64C21
	PLOT DATE = -	DATE - -	REVISED -				

JUN 04 2014

Township 44 North, Range 1 East of the 3rd P.M.

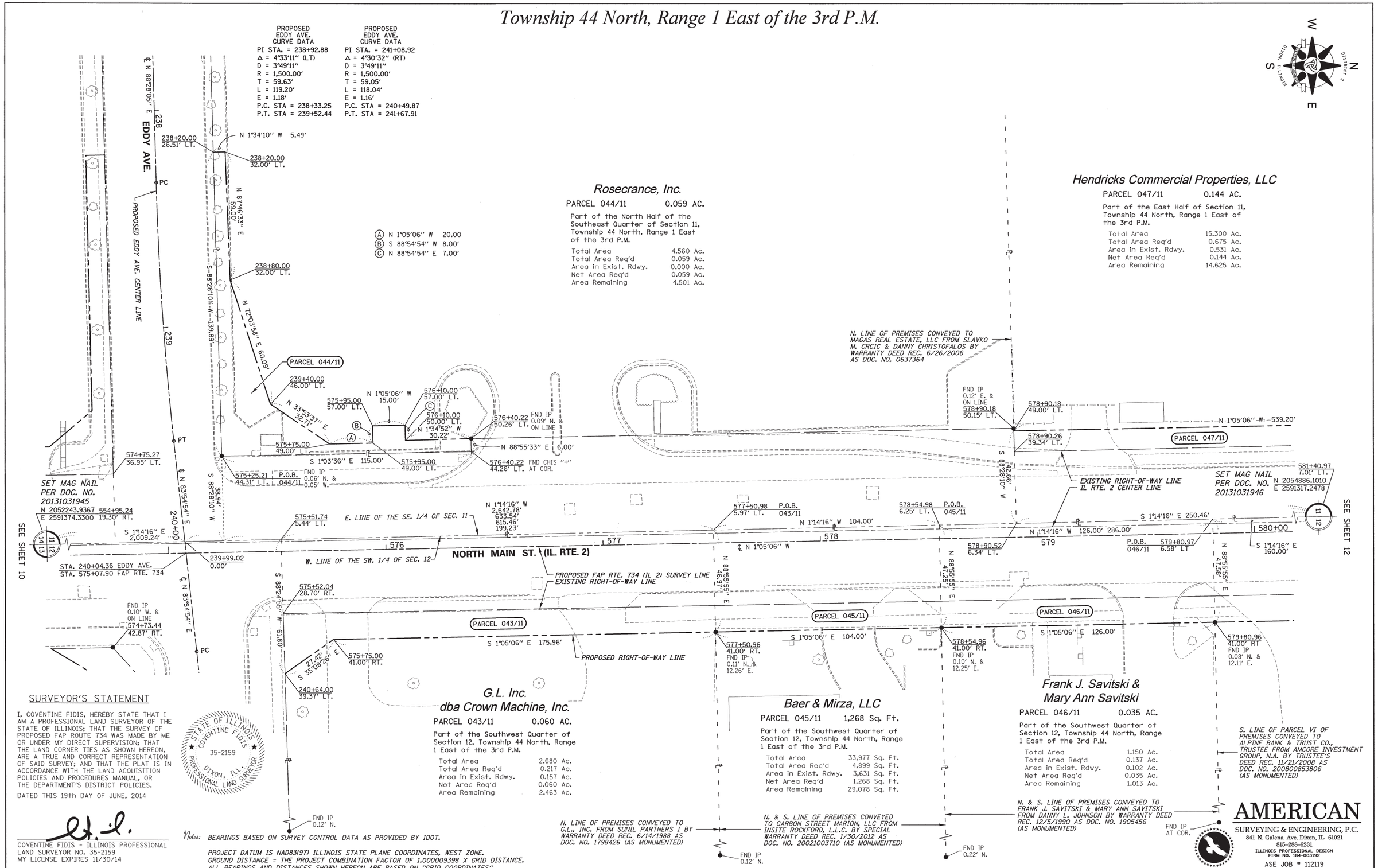

SURVEYOR'S STATEMENT

I, COVENTINE FIDIS, HEREBY STATE THAT I AM A PROFESSIONAL LAND SURVEYOR OF THE STATE OF ILLINOIS; THAT THE SURVEY OF PROPOSED FAP ROUTE 734 WAS MADE BY ME OR UNDER MY DIRECT SUPERVISION; THAT THE LAND CORNER TIES AS SHOWN HEREON, ARE A TRUE AND CORRECT REPRESENTATION OF SAID SURVEY; AND THAT THE PLAT IS IN ACCORDANCE WITH THE LAND ACQUISITION POLICIES AND PROCEDURES MANUAL, OR THE DEPARTMENT'S DISTRICT POLICIES.

DATED THIS 19th DAY OF JUNE, 2014

STATE OF ILLINOIS ★ COVENTINE FIDIS ★ 35-2159 DIXON, ILL. PROFESSIONAL LAND SURVEYOR

COVENTINE FIDIS - ILLINOIS PROFESSIONAL LAND SURVEYOR NO. 35-2159
MY LICENSE EXPIRES 11/30/14

Notes: BEARINGS BASED ON SURVEY CONTROL DATA AS PROVIDED BY IDOT.

PROJECT DATUM IS NAD83(97) ILLINOIS STATE PLANE COORDINATES, WEST ZONE.
GROUND DISTANCE = THE PROJECT COMBINATION FACTOR OF 1.000009398 X GRID DISTANCE.
ALL BEARINGS AND DISTANCES SHOWN HEREON ARE BASED ON "GRID COORDINATES".

AMERICAN SURVEYING & ENGINEERING, P.C.
841 N. Galena Ave. Dixon, IL 61021
815-288-6231
ILLINOIS PROFESSIONAL DESIGN FIRM NO. 184-003192
ASE JOB # 112119

FILE NAME = D264C21-sht-rowplat11.dgn	USER NAME =	DESIGNED - GB	REVISED -	ILLINOIS DEPARTMENT OF TRANSPORTATION RIGHT-OF-WAY PLAT	FAP RTE 734 (IL 2)	LAND SECTION 11 & 12	COUNTY WINNEBAGO JOB# R-92-002-10
DRAWER 48 FOLDER 4		DRAWN - CH	REVISED -		SEC 78R-2	T 44 N, R 1 E OF 3RD P.M.	PROJECT# Sheet 589 of 926
	PLOT SCALE = 1"=20'	CHECKED - CF	REVISED -		SCALE: 1" = 20'	SHEET NO. 11	STA 575+00 TO STA 579+80 CONTRACT NO. 64C21
	PLOT DATE = 9/12/2014	DATE - -	REVISED -				

SEP 15 2014

Township 44 North, Range 1 East of the 3rd P.M.

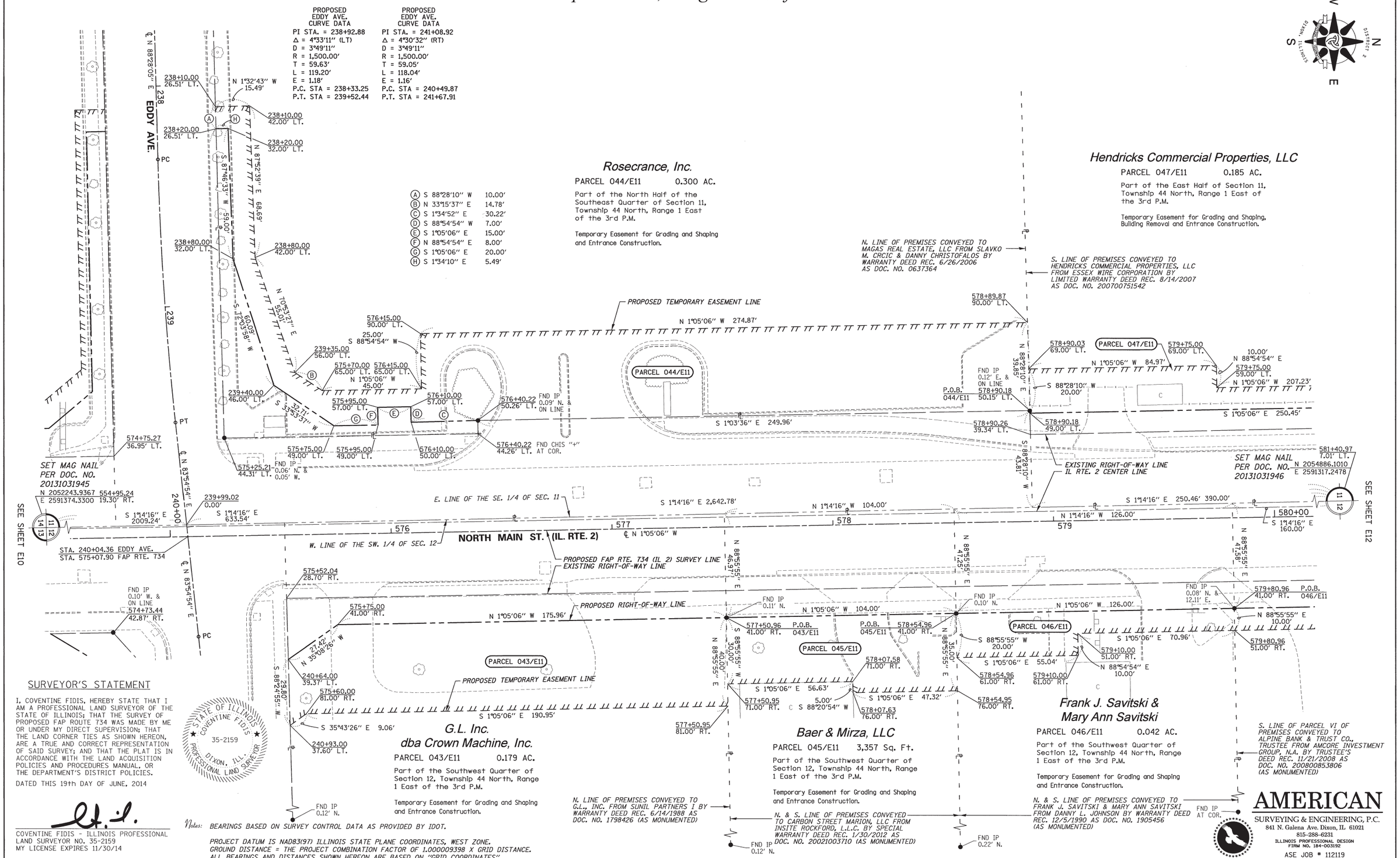

SURVEYOR'S STATEMENT

I, COVENTINE FIDIS, HEREBY STATE THAT I AM A PROFESSIONAL LAND SURVEYOR OF THE STATE OF ILLINOIS; THAT THE SURVEY OF PROPOSED FAP ROUTE 734 WAS MADE BY ME OR UNDER MY DIRECT SUPERVISION; THAT THE LAND CORNER TIES AS SHOWN HEREON, ARE A TRUE AND CORRECT REPRESENTATION OF SAID SURVEY; AND THAT THE PLAT IS IN ACCORDANCE WITH THE LAND ACQUISITION POLICIES AND PROCEDURES MANUAL, OR THE DEPARTMENT'S DISTRICT POLICIES.

DATED THIS 19th DAY OF JUNE, 2014

COVENTINE FIDIS - ILLINOIS PROFESSIONAL LAND SURVEYOR NO. 35-2159
MY LICENSE EXPIRES 11/30/14

Notes: BEARINGS BASED ON SURVEY CONTROL DATA AS PROVIDED BY IDOT.

PROJECT DATUM IS NAD83(97) ILLINOIS STATE PLANE COORDINATES, WEST ZONE.
GROUND DISTANCE = THE PROJECT COMBINATION FACTOR OF 1.000009398 X GRID DISTANCE.
ALL BEARINGS AND DISTANCES SHOWN HEREON ARE BASED ON "GRID COORDINATES".

FILE NAME = D264C21-sht-rowplat11E.dgn	USER NAME =	DESIGNED - GB	REVISED -	ILLINOIS DEPARTMENT OF TRANSPORTATION EASEMENT PLAT	FAP RTE 734 (IL 2)	LAND SECTION 11 & 12	COUNTY WINNEBAGO JOB# R-92-002-10
DRAWER 48 FOLDER 4		DRAWN - CH	REVISED -		SEC 78R-2	T 44 N, R 1 E OF 3RD P.M.	PROJECT# Sheet 590 of 926
	PLOT SCALE = 1"=20'	CHECKED - CF	REVISED -		SCALE: 1" = 20'	SHEET NO. E11	STA 575+00 TO STA 579+80 CONTRACT NO. 64C21
	PLOT DATE = 9/12/2014	DATE - -	REVISED -				

SEP 15 2014

Township 44 North, Range 1 East of the 3rd P.M.

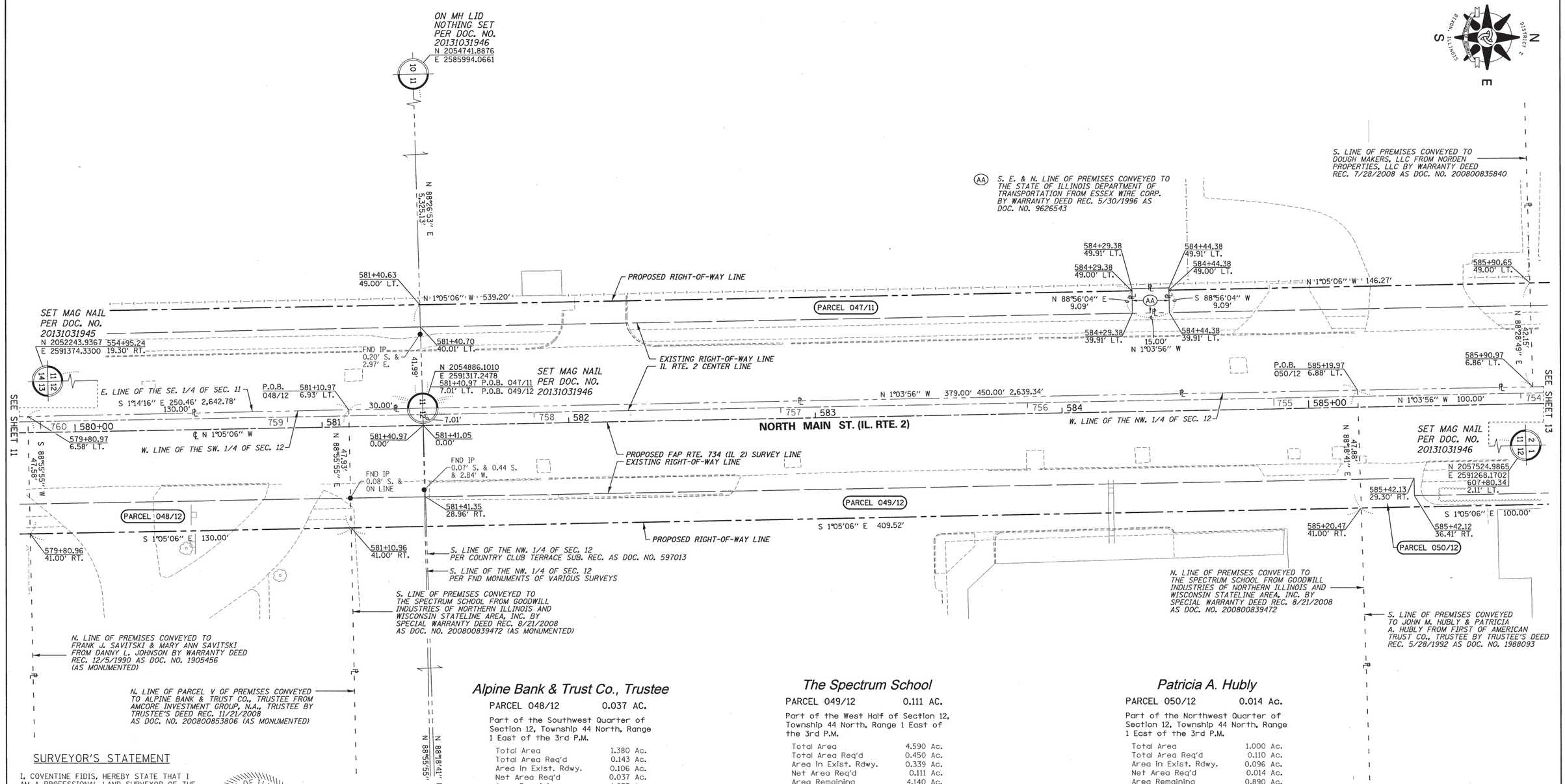

Alpine Bank & Trust Co., Trustee

PARCEL 048/12 0.037 AC.

Part of the Southwest Quarter of Section 12, Township 44 North, Range 1 East of the 3rd P.M.

Total Area	1.380 Ac.
Total Area Req'd	0.143 Ac.
Area in Exist. Rdwy.	0.106 Ac.
Net Area Req'd	0.037 Ac.
Area Remaining	1.237 Ac.

The Spectrum School

PARCEL 049/12 0.111 AC.

Part of the West Half of Section 12, Township 44 North, Range 1 East of the 3rd P.M.

Total Area	4.590 Ac.
Total Area Req'd	0.450 Ac.
Area in Exist. Rdwy.	0.339 Ac.
Net Area Req'd	0.111 Ac.
Area Remaining	4.140 Ac.

Patricia A. Hubly

PARCEL 050/12 0.014 Ac.

Part of the Northwest Quarter of Section 12, Township 44 North, Range 1 East of the 3rd P.M.

Total Area	1.000 Ac.
Total Area Req'd	0.110 Ac.
Area in Exist. Rdwy.	0.096 Ac.
Net Area Req'd	0.014 Ac.
Area Remaining	0.890 Ac.

SURVEYOR'S STATEMENT

I, COVENTINE FIDIS, HEREBY STATE THAT I AM A PROFESSIONAL LAND SURVEYOR OF THE STATE OF ILLINOIS; THAT THE SURVEY OF PROPOSED FAP ROUTE 734 WAS MADE BY ME OR UNDER MY DIRECT SUPERVISION; THAT THE LAND CORNER TIES AS SHOWN HEREON, ARE A TRUE AND CORRECT REPRESENTATION OF SAID SURVEY; AND THAT THE PLAT IS IN ACCORDANCE WITH THE LAND ACQUISITION POLICIES AND PROCEDURES MANUAL, OR THE DEPARTMENT'S DISTRICT POLICIES.

DATED THIS 31st DAY OF MARCH, 2014

STATE OF ILLINOIS COVENTINE FIDIS 35-2159 DIXON, ILL. PROFESSIONAL LAND SURVEYOR

COVENTINE FIDIS - ILLINOIS PROFESSIONAL LAND SURVEYOR NO. 35-2159
MY LICENSE EXPIRES 11/30/14

Notes: BEARINGS BASED ON SURVEY CONTROL DATA AS PROVIDED BY IDOT.

PROJECT DATUM IS NAD83(97) ILLINOIS STATE PLANE COORDINATES, WEST ZONE.
GROUND DISTANCE = THE PROJECT COMBINATION FACTOR OF 1.000009398 X GRID DISTANCE.
ALL BEARINGS AND DISTANCES SHOWN HEREON ARE BASED ON "GRID COORDINATES".

AMERICAN SURVEYING & ENGINEERING, P.C.
841 N. Galena Ave. Dixon, IL 61021
815-288-6231
ILLINOIS PROFESSIONAL DESIGN FIRM NO. 184-003192
ASE JOB # 112119

FILE NAME = D264C21-sht-rowplat12.dgn	USER NAME =	DESIGNED - GB	REVISED -	ILLINOIS DEPARTMENT OF TRANSPORTATION RIGHT-OF-WAY PLAT	FAP RTE 734 (IL 2)	LAND SECTION 11 & 12	COUNTY WINNEBAGO JOB# R-92-002-10
DRAWER 48 FOLDER 4		DRAWN - CH	REVISED -		SEC 78R-2	T 44 N, R 1 E OF 3RD P.M.	PROJECT# Sheet 591 of 926
	PLOT SCALE = 1"=20'	CHECKED - CF	REVISED -		SCALE: 1" = 20'	SHEET NO. 12	STA 579+80 TO STA 585+90 CONTRACT NO. 64C21
	PLOT DATE = 3/31/2014	DATE - -	REVISED -				

APR 0 1 2014

Township 44 North, Range 1 East of the 3rd P.M.

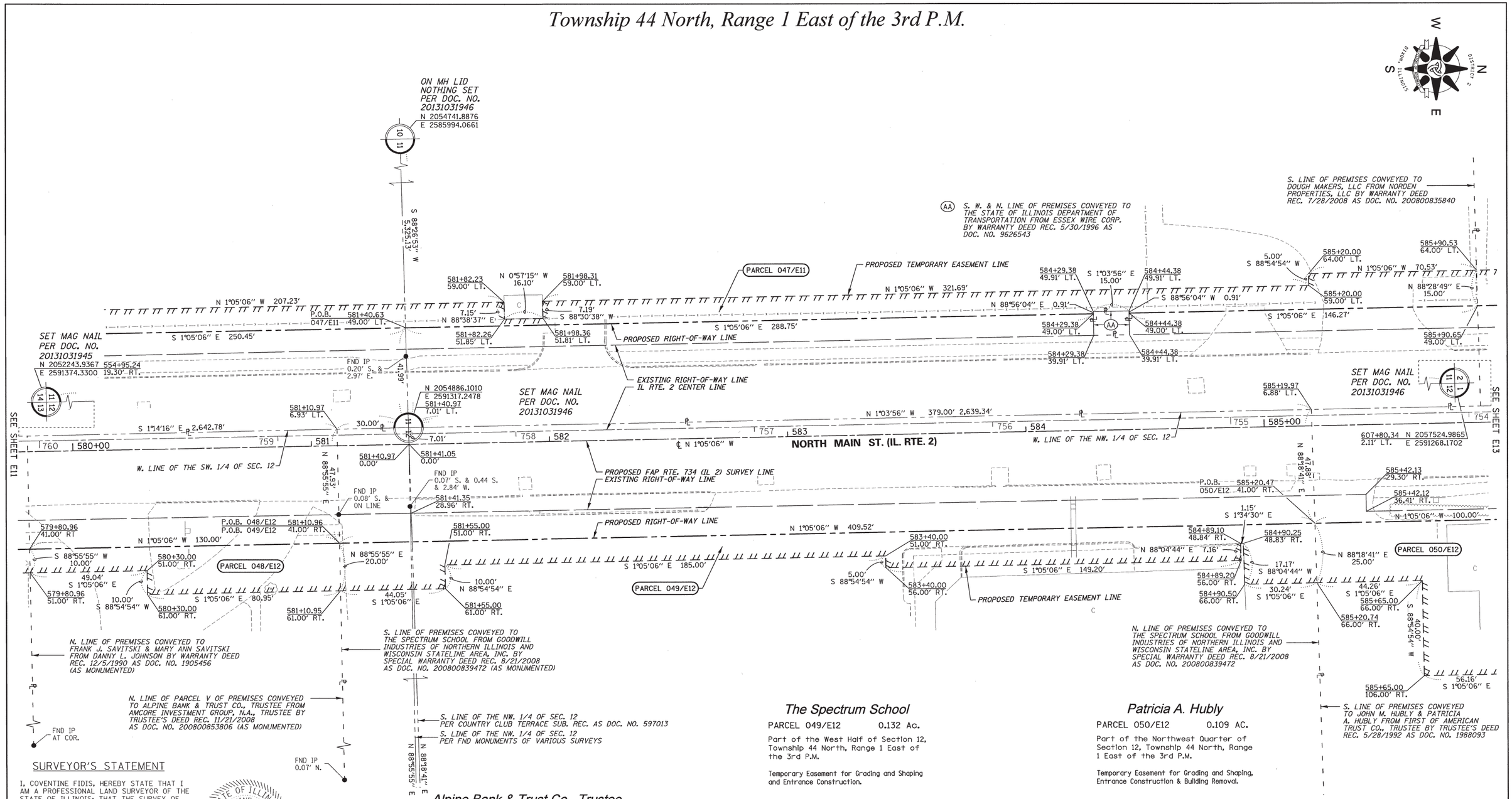

The Spectrum School

PARCEL 049/E12 0.132 Ac.

Part of the West Half of Section 12, Township 44 North, Range 1 East of the 3rd P.M.

Temporary Easement for Grading and Shaping and Entrance Construction.

Patricia A. Hubly

PARCEL 050/E12 0.109 AC.

Part of the Northwest Quarter of Section 12, Township 44 North, Range 1 East of the 3rd P.M.

Temporary Easement for Grading and Shaping, Entrance Construction & Building Removal.

Alpine Bank & Trust Co., Trustee

PARCEL 048/E12 0.048 Ac.

Part of the Southwest Quarter of Section 12, Township 44 North, Range 1 East of the 3rd P.M.

Temporary Easement for Grading and Shaping and Entrance Construction.

SURVEYOR'S STATEMENT

I, COVENTINE FIDIS, HEREBY STATE THAT I AM A PROFESSIONAL LAND SURVEYOR OF THE STATE OF ILLINOIS; THAT THE SURVEY OF PROPOSED FAP ROUTE 734 WAS MADE BY ME OR UNDER MY DIRECT SUPERVISION; THAT THE LAND CORNER TIES AS SHOWN HEREON, ARE A TRUE AND CORRECT REPRESENTATION OF SAID SURVEY; AND THAT THE PLAT IS IN ACCORDANCE WITH THE LAND ACQUISITION POLICIES AND PROCEDURES MANUAL, OR THE DEPARTMENT'S DISTRICT POLICIES.

DATED THIS 31st DAY OF MARCH, 2014

STATE OF ILLINOIS COVENTINE FIDIS 35-2159 DIXON, ILL. PROFESSIONAL LAND SURVEYOR

COVENTINE FIDIS - ILLINOIS PROFESSIONAL LAND SURVEYOR NO. 35-2159
MY LICENSE EXPIRES 11/30/14

Notes: BEARINGS BASED ON SURVEY CONTROL DATA AS PROVIDED BY IDOT.

PROJECT DATUM IS NAD83(97) ILLINOIS STATE PLANE COORDINATES, WEST ZONE.
GROUND DISTANCE = THE PROJECT COMBINATION FACTOR OF 1.000009398 X GRID DISTANCE.
ALL BEARINGS AND DISTANCES SHOWN HEREON ARE BASED ON "GRID COORDINATES".

AMERICAN SURVEYING & ENGINEERING, P.C.
841 N. Galena Ave. Dixon, IL 61021
815-288-6231
ILLINOIS PROFESSIONAL DESIGN FIRM NO. 184-003192
ASE JOB # 112119

FILE NAME = D264C21-sht-rowplat12E.dgn	USER NAME =	DESIGNED - GB	REVISED -	ILLINOIS DEPARTMENT OF TRANSPORTATION EASEMENT PLAT	FAP RTE 734 (IL 2)	LAND SECTION 11 & 12	COUNTY WINNEBAGO JOB# R-92-002-10
DRAWER 48 FOLDER 4		DRAWN - CH	REVISED -		SEC 78R-2	T 44 N, R 1 E OF 3RD P.M.	PROJECT# Sheet 592 of 926
	PLOT SCALE = 1"=20'	CHECKED - CF	REVISED -		SCALE: 1" = 20'	SHEET NO. E12	STA 579+80 TO STA 585+90 CONTRACT NO. 64C21
	PLOT DATE = 3/31/2014	DATE - 8/16/2013	REVISED -				

APR 0 1 2014

Township 44 North, Range 1 East of the 3rd P.M.

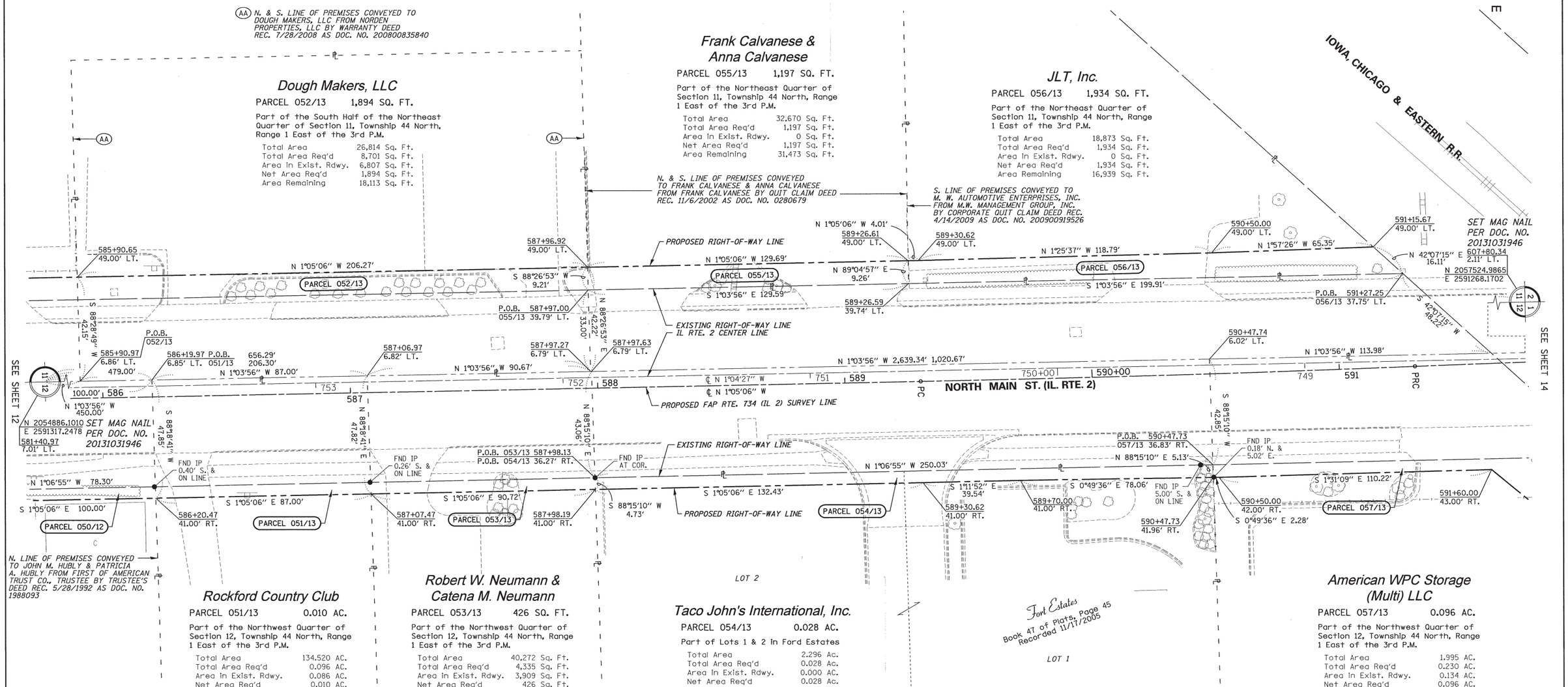

SURVEYOR'S STATEMENT

I, COVENTINE FIDIS, HEREBY STATE THAT I AM A PROFESSIONAL LAND SURVEYOR OF THE STATE OF ILLINOIS; THAT THE SURVEY OF PROPOSED FAP ROUTE 734 WAS MADE BY ME OR UNDER MY DIRECT SUPERVISION; THAT THE LAND CORNER TIES AS SHOWN HEREON, ARE A TRUE AND CORRECT REPRESENTATION OF SAID SURVEY; AND THAT THE PLAT IS IN ACCORDANCE WITH THE LAND ACQUISITION POLICIES AND PROCEDURES MANUAL, OR THE DEPARTMENT'S DISTRICT POLICIES.

DATED THIS 31st DAY OF MARCH, 2014

STATE OF ILLINOIS COVENTINE FIDIS 35-2159 DIXON, ILL. PROFESSIONAL LAND SURVEYOR

COVENTINE FIDIS - ILLINOIS PROFESSIONAL LAND SURVEYOR NO. 35-2159
MY LICENSE EXPIRES 11/30/14

Notes: BEARINGS BASED ON SURVEY CONTROL DATA AS PROVIDED BY IDOT.

PROJECT DATUM IS NAD83(97) ILLINOIS STATE PLANE COORDINATES, WEST ZONE.
GROUND DISTANCE = THE PROJECT COMBINATION FACTOR OF 1.000009398 X GRID DISTANCE.
ALL BEARINGS AND DISTANCES SHOWN HEREON ARE BASED ON "GRID COORDINATES".

AMERICAN SURVEYING & ENGINEERING, P.C.
841 N. Galena Ave. Dixon, IL 61021
815-288-6231
ILLINOIS PROFESSIONAL DESIGN FIRM NO. 184-003192
ASE JOB # 112119

FILE NAME = D264C21-sht-rowplat13.dgn	USER NAME =	DESIGNED - GB	REVISED -	ILLINOIS DEPARTMENT OF TRANSPORTATION RIGHT-OF-WAY PLAT	FAP RTE 734 (IL 2)	LAND SECTION 11 & 12	COUNTY WINNEBAGO JOB# R-92-002-10
DRAWER 48 FOLDER 4		DRAWN - CH	REVISED -		SEC 78R-2	T 44 N, R 1 E OF 3RD P.M.	PROJECT# Sheet 593 of 926
	PLOT SCALE = 1"=20'	CHECKED - CF	REVISED -		SCALE: 1" = 20'	SHEET NO. 13	STA 585+90 TO STA 591+60 CONTRACT NO. 64C21
	PLOT DATE = 3/31/2014	DATE - 9/03/13	REVISED -				

APR 0 1 2014

Township 44 North, Range 1 East of the 3rd P.M.

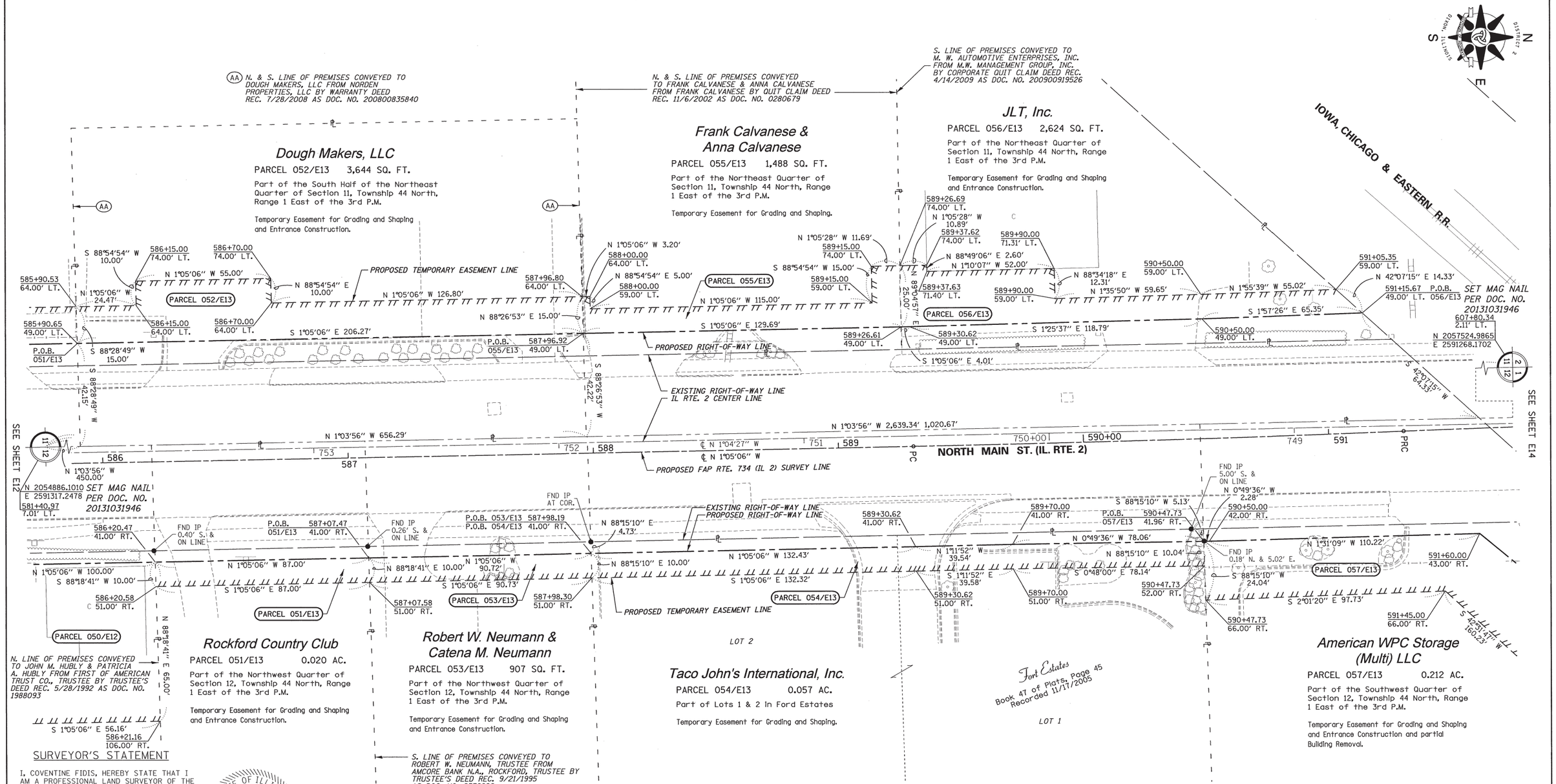

PROPOSED
FAP RTE 734
CURVE DATA
PI STA. = 590+30.62
Δ = 1° 08′ 45″ (LT)
D = 0°34′23″
R = 10,000.00′
T = 100.00′
L = 200.00′
E = 0.50′
P.C. STA = 589+30.62
P.R.C. STA = 591+30.62

SURVEYOR'S STATEMENT

I, COVENTINE FIDIS, HEREBY STATE THAT I AM A PROFESSIONAL LAND SURVEYOR OF THE STATE OF ILLINOIS; THAT THE SURVEY OF PROPOSED FAP ROUTE 734 WAS MADE BY ME OR UNDER MY DIRECT SUPERVISION; THAT THE LAND CORNER TIES AS SHOWN HEREON, ARE A TRUE AND CORRECT REPRESENTATION OF SAID SURVEY; AND THAT THE PLAT IS IN ACCORDANCE WITH THE LAND ACQUISITION POLICIES AND PROCEDURES MANUAL, OR THE DEPARTMENT'S DISTRICT POLICIES.

DATED THIS 31st DAY OF MARCH, 2014

STATE OF ILLINOIS · COVENTINE FIDIS · 35-2159 · DIXON, ILL. · PROFESSIONAL LAND SURVEYOR

COVENTINE FIDIS - ILLINOIS PROFESSIONAL
LAND SURVEYOR NO. 35-2159
MY LICENSE EXPIRES 11/30/14

Notes: BEARINGS BASED ON SURVEY CONTROL DATA AS PROVIDED BY IDOT.

PROJECT DATUM IS NAD83(97) ILLINOIS STATE PLANE COORDINATES, WEST ZONE.
GROUND DISTANCE = THE PROJECT COMBINATION FACTOR OF 1.000009398 X GRID DISTANCE.
ALL BEARINGS AND DISTANCES SHOWN HEREON ARE BASED ON "GRID COORDINATES".

AMERICAN
SURVEYING & ENGINEERING, P.C.
841 N. Galena Ave. Dixon, IL 61021
815-288-6231
ILLINOIS PROFESSIONAL DESIGN FIRM NO. 184-003192
ASE JOB # 112119

FILE NAME = D264C21-sht-rowplat13E.dgn	USER NAME =	DESIGNED - GB	REVISED -	ILLINOIS DEPARTMENT OF TRANSPORTATION EASEMENT PLAT	FAP RTE 734 (IL 2)	LAND SECTION 11 & 12	COUNTY WINNEBAGO JOB# R-92-002-10
DRAWER 48 FOLDER 4		DRAWN - CH	REVISED -		SEC 78R-2	T 44 N, R 1 E OF 3RD P.M.	PROJECT# Sheet 594 of 926
	PLOT SCALE = 1"=20'	CHECKED - CF	REVISED -		SCALE: 1" = 20'	SHEET NO. E13	STA 585+90 TO STA 591+60 CONTRACT NO. 64C21
	PLOT DATE = 3/31/2014	DATE - -	REVISED -				

APR 0 1 2014

Township 44 North, Range 1 East of the 3rd P.M.

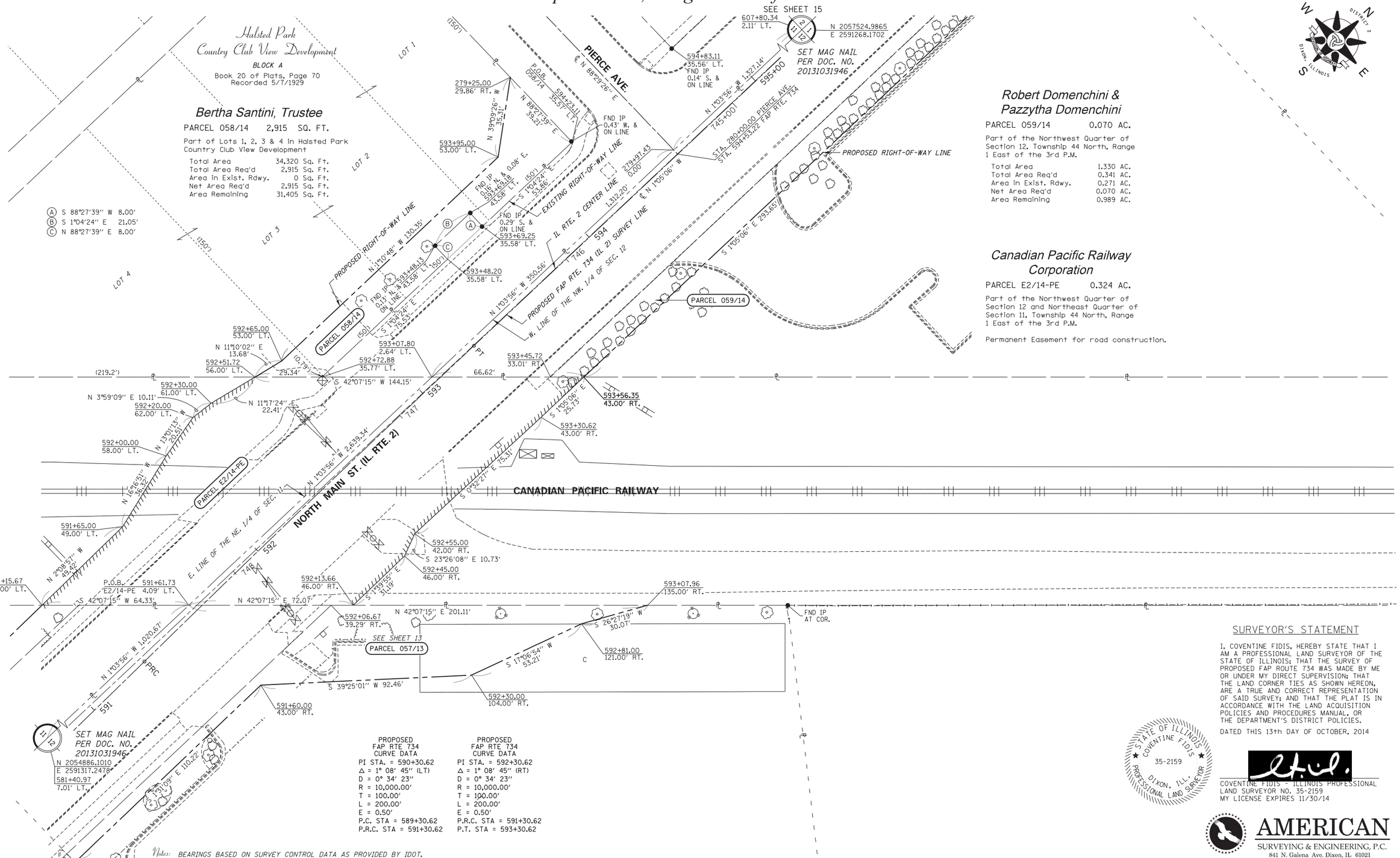

PROPOSED FAP RTE 734 CURVE DATA	PROPOSED FAP RTE 734 CURVE DATA
PI STA. = 590+30.62	PI STA. = 592+30.62
Δ = 1° 08′ 45″ (LT)	Δ = 1° 08′ 45″ (RT)
D = 0° 34′ 23″	D = 0° 34′ 23″
R = 10,000.00′	R = 10,000.00′
T = 100.00′	T = 100.00′
L = 200.00′	L = 200.00′
E = 0.50′	E = 0.50′
P.C. STA = 589+30.62	P.R.C. STA = 591+30.62
P.R.C. STA = 591+30.62	P.T. STA = 593+30.62

Notes: BEARINGS BASED ON SURVEY CONTROL DATA AS PROVIDED BY IDOT.

PROJECT DATUM IS NAD83(97) ILLINOIS STATE PLANE COORDINATES, WEST ZONE.
GROUND DISTANCE = THE PROJECT COMBINATION FACTOR OF 1.000009398 X GRID DISTANCE.
ALL BEARINGS AND DISTANCES SHOWN HEREON ARE BASED ON "GRID COORDINATES".

SURVEYOR'S STATEMENT

I, COVENTINE FIDIS, HEREBY STATE THAT I AM A PROFESSIONAL LAND SURVEYOR OF THE STATE OF ILLINOIS; THAT THE SURVEY OF PROPOSED FAP ROUTE 734 WAS MADE BY ME OR UNDER MY DIRECT SUPERVISION; THAT THE LAND CORNER TIES AS SHOWN HEREON, ARE A TRUE AND CORRECT REPRESENTATION OF SAID SURVEY; AND THAT THE PLAT IS IN ACCORDANCE WITH THE LAND ACQUISITION POLICIES AND PROCEDURES MANUAL, OR THE DEPARTMENT'S DISTRICT POLICIES.

DATED THIS 13th DAY OF OCTOBER, 2014

STATE OF ILLINOIS ★ COVENTINE FIDIS ★ 35-2159 DIXON, ILL. PROFESSIONAL LAND SURVEYOR

COVENTINE FIDIS - ILLINOIS PROFESSIONAL LAND SURVEYOR NO. 35-2159
MY LICENSE EXPIRES 11/30/14

AMERICAN
SURVEYING & ENGINEERING, P.C.
841 N. Galena Ave. Dixon, IL 61021
815-288-6231
ILLINOIS PROFESSIONAL DESIGN FIRM NO. 184-003192
ASE JOB # 112119

FILE NAME = D264C21-sht-rowplat14.dgn	USER NAME =	DESIGNED - GB	REVISED -	ILLINOIS DEPARTMENT OF TRANSPORTATION RIGHT-OF-WAY PLAT	FAP RTE 734 (IL 2)	LAND SECTION 11 & 12	COUNTY WINNEBAGO JOB# R-92-002-10
DRAWER 48 FOLDER 4		DRAWN - CH	REVISED -		SEC 78R-2	T 44 N, R 1 E OF 3RD P.M.	PROJECT# Sheet 595 of 926
	PLOT SCALE = 1"=20'	CHECKED - CF	REVISED -		SCALE: 1" = 20'	SHEET NO. 14	STA 591+00 TO STA 595+60 CONTRACT NO. 64C21
	PLOT DATE = 10/13/2014	DATE - 8/26/13	REVISED -				

Township 44 North, Range 1 East of the 3rd P.M.

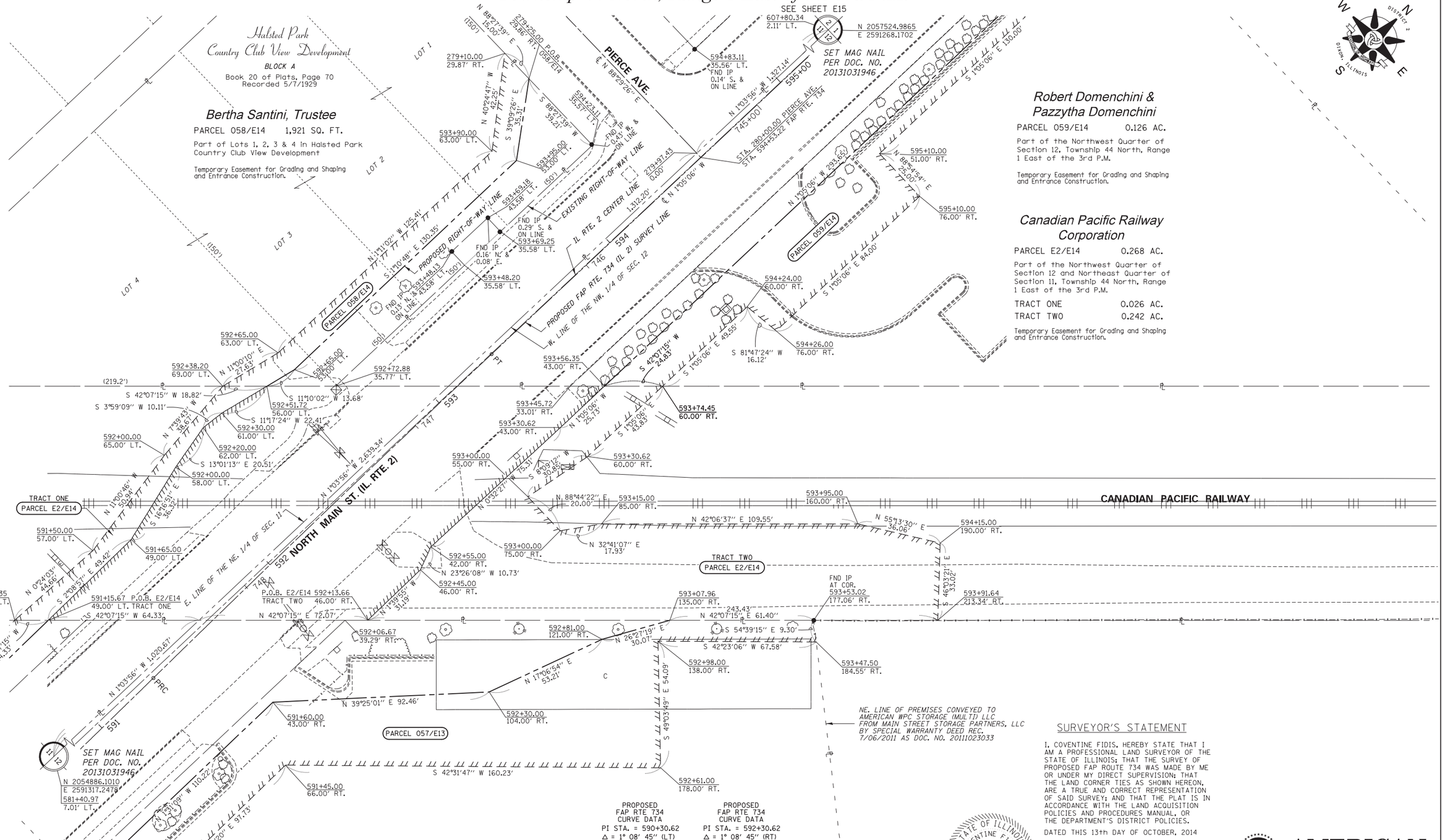

PROPOSED
FAP RTE 734
CURVE DATA

PI STA. = 590+30.62
Δ = 1° 08′ 45″ (LT)
D = 0° 34′ 23″
R = 10,000.00′
T = 100.00′
L = 200.00′
E = 0.50′
P.C. STA = 589+30.62
P.R.C. STA = 591+30.62

PROPOSED
FAP RTE 734
CURVE DATA

PI STA. = 592+30.62
Δ = 1° 08′ 45″ (RT)
D = 0° 34′ 23″
R = 10,000.00′
T = 100.00′
L = 200.00′
E = 0.50′
P.R.C. STA = 591+30.62
P.T. STA = 593+30.62

Note: BEARINGS BASED ON SURVEY CONTROL DATA AS PROVIDED BY IDOT.

PROJECT DATUM IS NAD83(97) ILLINOIS STATE PLANE COORDINATES, WEST ZONE.
GROUND DISTANCE = THE PROJECT COMBINATION FACTOR OF 1.000009398 X GRID DISTANCE.
ALL BEARINGS AND DISTANCES SHOWN HEREON ARE BASED ON "GRID COORDINATES".

SURVEYOR'S STATEMENT

I, COVENTINE FIDIS, HEREBY STATE THAT I AM A PROFESSIONAL LAND SURVEYOR OF THE STATE OF ILLINOIS; THAT THE SURVEY OF PROPOSED FAP ROUTE 734 WAS MADE BY ME OR UNDER MY DIRECT SUPERVISION; THAT THE LAND CORNER TIES AS SHOWN HEREON, ARE A TRUE AND CORRECT REPRESENTATION OF SAID SURVEY; AND THAT THE PLAT IS IN ACCORDANCE WITH THE LAND ACQUISITION POLICIES AND PROCEDURES MANUAL, OR THE DEPARTMENT'S DISTRICT POLICIES.

DATED THIS 13th DAY OF OCTOBER, 2014

STATE OF ILLINOIS
COVENTINE FIDIS
35-2159
PROFESSIONAL LAND SURVEYOR
DIXON, ILL.

COVENTINE FIDIS, PROFESSIONAL
LAND SURVEYOR NO. 35-2159
MY LICENSE EXPIRES 11/30/14

AMERICAN
SURVEYING & ENGINEERING, P.C.
841 N. Galena Ave. Dixon, IL 61021
815-288-6231
ILLINOIS PROFESSIONAL DESIGN
FIRM NO. 184-003192
ASE JOB # 112119

FILE NAME = D264C21-sht-rowplat14E.dgn	USER NAME =	DESIGNED - GB	REVISED -	ILLINOIS DEPARTMENT OF TRANSPORTATION EASEMENT PLAT	FAP RTE 734 (IL 2)	LAND SECTION 11 & 12	COUNTY WINNEBAGO JOB# R-92-002-10
DRAWER 48 FOLDER 4		DRAWN - CH	REVISED -		SEC 78R-2	T 44 N, R 1 E OF 3RD P.M.	PROJECT# Sheet 596 of 926
	PLOT SCALE = 1'=20'	CHECKED - CF	REVISED -		SCALE: 1" = 20'	SHEET NO. E14	STA 591+00 TO STA 595+60 CONTRACT NO. 64C21
	PLOT DATE = 10/13/2014	DATE - 8/5/2013	REVISED -				

Township 44 North, Range 1 East of the 3rd P.M.

Eugene H. Smith & Alan F. Smith

PARCEL 060/15 1,146 SQ. FT.

Part of Lots 10 & 11 in Block 7 in Halsted Park Subdivision.

Total Area	7,500 Sq. Ft.
Total Area Req'd	1,146 Sq. Ft.
Area in Exist. Rdwy.	0 Sq. Ft.
Net Area Req'd	1,146 Sq. Ft.
Area Remaining	6,354 Sq. Ft.

Raymond C. Streit

PARCEL 061/15 2,183 SQ. FT.

Part of Lots 5, 6, 7, 8 & 9 in Block 7 in Halsted Park Subdivision.

Total Area	18,750 Sq. Ft.
Total Area Req'd	2,183 Sq. Ft.
Area in Exist. Rdwy.	0 Sq. Ft.
Net Area Req'd	2,183 Sq. Ft.
Area Remaining	16,567 Sq. Ft.

Joseph T. Geraghty, III & Jeanette M. Jess, Trustees

PARCEL 062/15 2,186 SQ. FT.

Part of Lots 2, 3, & 4 in Block 7 in Halsted Park Subdivision.

Total Area	18,750 Sq. Ft.
Total Area Req'd	2,186 Sq. Ft.
Area in Exist. Rdwy.	0 Sq. Ft.
Net Area Req'd	2,186 Sq. Ft.
Area Remaining	16,564 Sq. Ft.

Nancy Kelly & Angelisa Morales

PARCEL 063/15 941 SQ. FT.

Part of Lot 1 in Block 7 in Halsted Park Subdivision.

Total Area	7,500 Sq. Ft.
Total Area Req'd	941 Sq. Ft.
Area in Exist. Rdwy.	0 Sq. Ft.
Net Area Req'd	941 Sq. Ft.
Area Remaining	6,559 Sq. Ft.

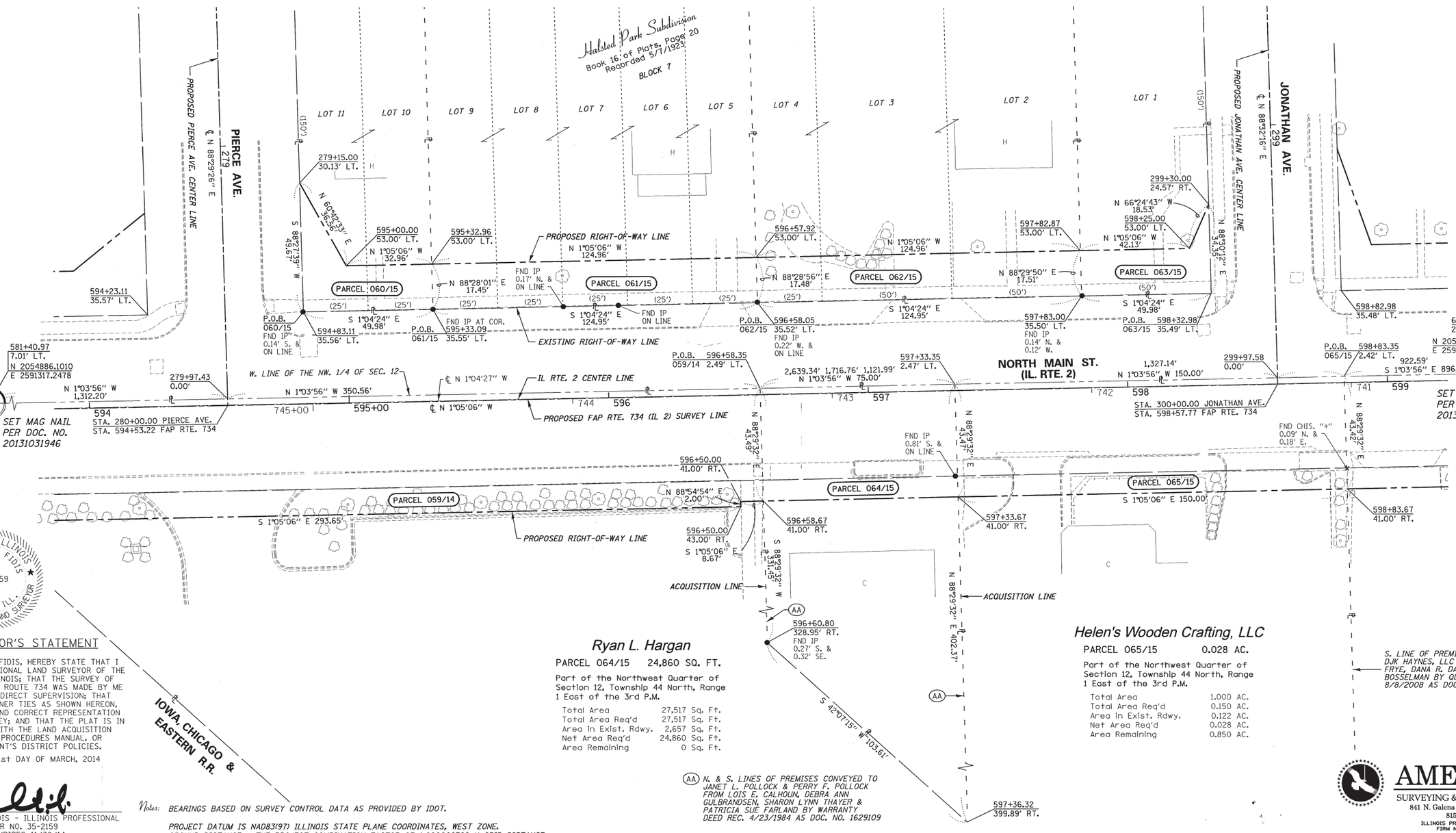

STATE OF ILLINOIS
COVENTINE FIDIS
35-2159
DIXON, ILL.
PROFESSIONAL LAND SURVEYOR

SURVEYOR'S STATEMENT

I, COVENTINE FIDIS, HEREBY STATE THAT I AM A PROFESSIONAL LAND SURVEYOR OF THE STATE OF ILLINOIS; THAT THE SURVEY OF PROPOSED FAP ROUTE 734 WAS MADE BY ME OR UNDER MY DIRECT SUPERVISION; THAT THE LAND CORNER TIES AS SHOWN HEREON, ARE A TRUE AND CORRECT REPRESENTATION OF SAID SURVEY; AND THAT THE PLAT IS IN ACCORDANCE WITH THE LAND ACQUISITION POLICIES AND PROCEDURES MANUAL, OR THE DEPARTMENT'S DISTRICT POLICIES.

DATED THIS 31st DAY OF MARCH, 2014

COVENTINE FIDIS - ILLINOIS PROFESSIONAL LAND SURVEYOR NO. 35-2159
MY LICENSE EXPIRES 11/30/14

Notes: BEARINGS BASED ON SURVEY CONTROL DATA AS PROVIDED BY IDOT.

PROJECT DATUM IS NAD83(97) ILLINOIS STATE PLANE COORDINATES, WEST ZONE.
GROUND DISTANCE = THE PROJECT COMBINATION FACTOR OF 1.000009398 X GRID DISTANCE.
ALL BEARINGS AND DISTANCES SHOWN HEREON ARE BASED ON "GRID COORDINATES".

AMERICAN
SURVEYING & ENGINEERING, P.C.
841 N. Galena Ave. Dixon, IL 61021
815-288-6231
ILLINOIS PROFESSIONAL DESIGN FIRM NO. 184-003192
ASE JOB # 112119

FILE NAME = D264C21-sht-rowplat15.dgn	USER NAME =	DESIGNED - GB	REVISED -	ILLINOIS DEPARTMENT OF TRANSPORTATION RIGHT-OF-WAY PLAT	FAP RTE 734 (IL 2)	LAND SECTION 11 & 12	COUNTY WINNEBAGO JOB# R-92-002-10
DRAWER 48 FOLDER 4		DRAWN - CH	REVISED -		SEC 78R-2	T 44 N, R 1 E OF 3RD P.M.	PROJECT# Sheet 597 of 926
	PLOT SCALE = 1"=20'	CHECKED - CF	REVISED -		SCALE: 1" = 20'	SHEET NO. 15	STA 594+00 TO STA 599+00 CONTRACT NO. 64C21
	PLOT DATE = 3/31/2014	DATE - 8/6/2013	REVISED -				

APR 01 2014

Township 44 North, Range 1 East of the 3rd P.M.

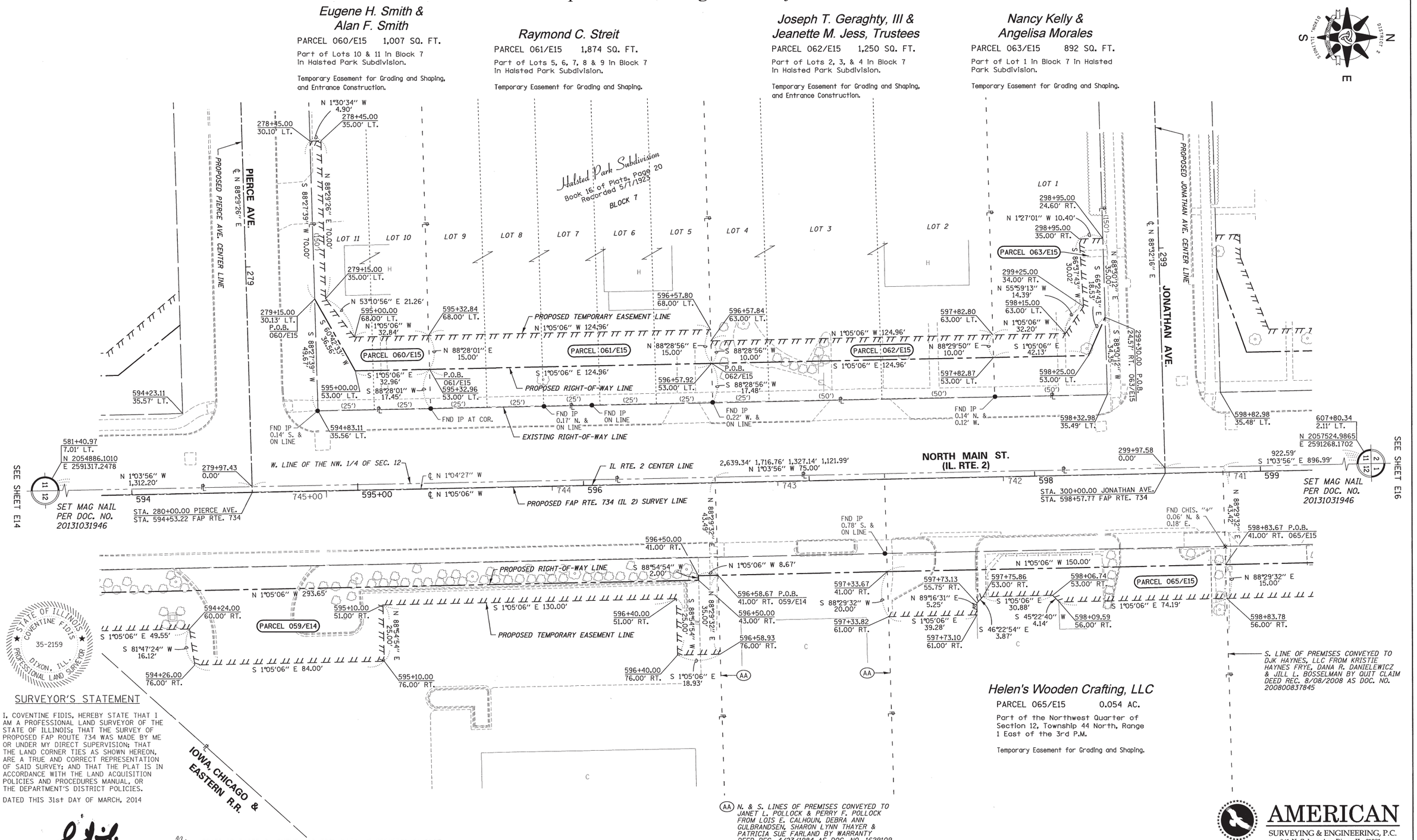

SURVEYOR'S STATEMENT

I, COVENTINE FIDIS, HEREBY STATE THAT I AM A PROFESSIONAL LAND SURVEYOR OF THE STATE OF ILLINOIS; THAT THE SURVEY OF PROPOSED FAP ROUTE 734 WAS MADE BY ME OR UNDER MY DIRECT SUPERVISION; THAT THE LAND CORNER TIES AS SHOWN HEREON, ARE A TRUE AND CORRECT REPRESENTATION OF SAID SURVEY; AND THAT THE PLAT IS IN ACCORDANCE WITH THE LAND ACQUISITION POLICIES AND PROCEDURES MANUAL, OR THE DEPARTMENT'S DISTRICT POLICIES.

DATED THIS 31st DAY OF MARCH, 2014

COVENTINE FIDIS - ILLINOIS PROFESSIONAL LAND SURVEYOR NO. 35-2159
MY LICENSE EXPIRES 11/30/14

Notes: BEARINGS BASED ON SURVEY CONTROL DATA AS PROVIDED BY IDOT.

PROJECT DATUM IS NAD83(97) ILLINOIS STATE PLANE COORDINATES, WEST ZONE.
GROUND DISTANCE = THE PROJECT COMBINATION FACTOR OF 1.000009398 X GRID DISTANCE.
ALL BEARINGS AND DISTANCES SHOWN HEREON ARE BASED ON "GRID COORDINATES".

AMERICAN SURVEYING & ENGINEERING, P.C.
841 N. Galena Ave. Dixon, IL 61021
815-288-6231
ILLINOIS PROFESSIONAL DESIGN FIRM NO. 184-003192
ASE JOB # 112119

FILE NAME = D264C21-sht-rowplat15E.dgn	USER NAME =	DESIGNED - GB	REVISED -	ILLINOIS DEPARTMENT OF TRANSPORTATION EASEMENT PLAT	FAP RTE 734 (IL 2)	LAND SECTION 11 & 12	COUNTY WINNEBAGO JOB# R-92-002-10
DRAWER 48 FOLDER 4		DRAWN - CH	REVISED -		SEC 78R-2	T 44 N, R 1 E OF 3RD P.M.	PROJECT# Sheet 598 of 926
	PLOT SCALE = 1"=20'	CHECKED - CF	REVISED -		SCALE: 1" = 20'	SHEET NO. E15	STA 594+00 TO STA 599+00 CONTRACT NO. 64C21
	PLOT DATE = 3/31/2014	DATE - 8/7/2013	REVISED -				

APR 0 1 2014

Township 44 North, Range 1 East of the 3rd P.M.

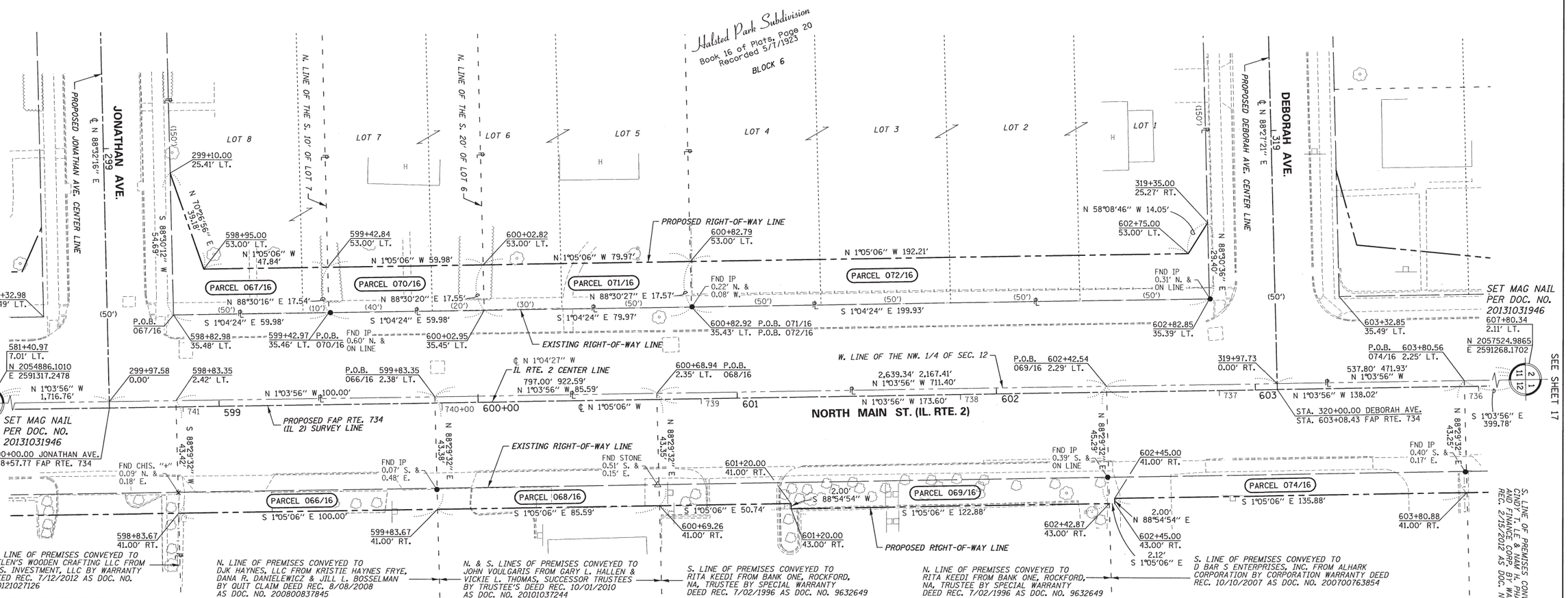

Plank Road, LLC, Assignee

PARCEL 067/16 1,277 SQ. FT.

Part of Lots 7 & 8 in Block 6 in Halsted Park Subdivision.

Total Area	9,000 Sq. Ft.
Total Area Req'd	1,277 Sq. Ft.
Area in Exist. Rdwy.	0 Sq. Ft.
Net Area Req'd	1,277 Sq. Ft.
Area Remaining	7,723 Sq. Ft.

Douglas A. Johnson

PARCEL 070/16 1,052 SQ. FT.

Part of Lots 6 & 7 in Block 6 in Halsted Park Subdivision.

Total Area	9,000 Sq. Ft.
Total Area Req'd	1,052 Sq. Ft.
Area in Exist. Rdwy.	0 Sq. Ft.
Net Area Req'd	1,052 Sq. Ft.
Area Remaining	7,948 Sq. Ft.

Edmundo Ruiz

PARCEL 071/16 1,404 SQ. FT.

Part of Lots 5 & 6 in Block 6 in Halsted Park Subdivision.

Total Area	12,000 Sq. Ft.
Total Area Req'd	1,404 Sq. Ft.
Area in Exist. Rdwy.	0 Sq. Ft.
Net Area Req'd	1,404 Sq. Ft.
Area Remaining	10,596 Sq. Ft.

David E. Sapp & Sandra D. Nicklos

PARCEL 072/16 3,562 SQ. FT.

Part of Lots 1, 2, 3 & 4 in Block 6 in Halsted Park Subdivision.

Total Area	30,000 Sq. Ft.
Total Area Req'd	3,562 Sq. Ft.
Area in Exist. Rdwy.	0 Sq. Ft.
Net Area Req'd	3,562 Sq. Ft.
Area Remaining	26,438 Sq. Ft.

DJK Haynes, LLC

PARCEL 066/16 810 SQ. FT.

Part of the Northwest Quater of Section 12, Township 44 North, Range 1 East of the 3rd P.M.

Total Area	33,300 Sq. Ft.
Total Area Req'd	4,340 Sq. Ft.
Area in Exist. Rdwy.	3,530 Sq. Ft.
Net Area Req'd	810 Sq. Ft.
Area Remaining	28,960 Sq. Ft.

John Voulgaris

PARCEL 068/16 695 SQ. FT.

Part of the Northwest Quater of Section 12, Township 44 North, Range 1 East of the 3rd P.M.

Total Area	28,248 Sq. Ft.
Total Area Req'd	3,712 Sq. Ft.
Area in Exist. Rdwy.	3,017 Sq. Ft.
Net Area Req'd	695 Sq. Ft.
Area Remaining	24,536 Sq. Ft.

Rita Keedi

PARCEL 069/16 0.038 AC.

Part of the Northwest Quater of Section 12, Township 44 North, Range 1 East of the 3rd P.M.

Total Area	1.500 Ac.
Total Area Req'd	0.178 Ac.
Area in Exist. Rdwy.	0.140 Ac.
Net Area Req'd	0.038 Ac.
Area Remaining	1.322 Ac.

D Bar S Enterprises, Inc.

PARCEL 074/16 0.026 AC.

Part of the Northwest Quater of Section 12, Township 44 North, Range 1 East of the 3rd P.M.

Total Area	1.096 Ac.
Total Area Req'd	0.137 Ac.
Area in Exist. Rdwy.	0.111 Ac.
Net Area Req'd	0.026 Ac.
Area Remaining	0.959 Ac.

SURVEYOR'S STATEMENT

I, COVENTINE FIDIS, HEREBY STATE THAT I AM A PROFESSIONAL LAND SURVEYOR OF THE STATE OF ILLINOIS; THAT THE SURVEY OF PROPOSED FAP ROUTE 734 WAS MADE BY ME OR UNDER MY DIRECT SUPERVISION; THAT THE LAND CORNER TIES AS SHOWN HEREON, ARE A TRUE AND CORRECT REPRESENTATION OF SAID SURVEY; AND THAT THE PLAT IS IN ACCORDANCE WITH THE LAND ACQUISITION POLICIES AND PROCEDURES MANUAL, OR THE DEPARTMENT'S DISTRICT POLICIES.

DATED THIS 19th DAY OF JUNE, 2014

STATE OF ILLINOIS · COVENTINE FIDIS · 35-2159 · DIXON, ILL. · PROFESSIONAL LAND SURVEYOR

COVENTINE FIDIS - ILLINOIS PROFESSIONAL LAND SURVEYOR NO. 35-2159
MY LICENSE EXPIRES 11/30/14

Notes: BEARINGS BASED ON SURVEY CONTROL DATA AS PROVIDED BY IDOT.

PROJECT DATUM IS NAD83(97) ILLINOIS STATE PLANE COORDINATES, WEST ZONE.
GROUND DISTANCE = THE PROJECT COMBINATION FACTOR OF 1.000009398 X GRID DISTANCE.
ALL BEARINGS AND DISTANCES SHOWN HEREON ARE BASED ON "GRID COORDINATES".

AMERICAN SURVEYING & ENGINEERING, P.C.
841 N. Galena Ave. Dixon, IL 61021
815-288-6231
ILLINOIS PROFESSIONAL DESIGN FIRM NO. 184-003192
ASE JOB # 112119

FILE NAME = D264C21-sht-rowplat16.dgn	USER NAME =	DESIGNED - GB	REVISED -
DRAWER 48 FOLDER 4		DRAWN - CH	REVISED -
	PLOT SCALE = 1"=20'	CHECKED - CF	REVISED -
	PLOT DATE = 9/12/2014	DATE - 8/15/2013	REVISED -

ILLINOIS DEPARTMENT OF TRANSPORTATION
RIGHT-OF-WAY PLAT

FAP RTE 734 (IL 2)	LAND SECTION 11 & 12	COUNTY WINNEBAGO	JOB# R-92-002-10
SEC 78R-2	T 44 N, R 1 E OF 3RD P.M.	PROJECT#	Sheet 599 of 926
SCALE: 1" = 20'	SHEET NO. 16	STA 599+00 TO STA 603+80	CONTRACT NO. 64C21

SEP 15 2014

Township 44 North, Range 1 East of the 3rd P.M.

Ⓐ 15.00′ N 88°29′32″ E
Ⓑ 15.00′ S 88°29′32″ W
Ⓒ 15.00′ S 88°30′12″ W
Ⓓ 27.77′ N 1°05′06″ W
Ⓔ 5.00′ S 88°30′16″ W
Ⓕ 10.00′ N 1°05′06″ W
Ⓖ 15.00′ N 88°30′16″ E
Ⓗ 15.00′ N 88°29′32″ E
Ⓘ 3.04′ S 87°54′02″ W

Plank Road, LLC, Assignee
PARCEL 067/E16 1,059 SQ. FT.
Part of Lots 7 & 8 in Block 6 in Halsted Park Subdivision.
Temporary Easement for Grading and Shaping.

Douglas A. Johnson
PARCEL 070/E16 900 SQ. FT.
Part of Lots 6 & 7 in Block 6 in Halsted Park Subdivision.
Temporary Easement for Grading and Shaping.

Edmundo Ruiz
PARCEL 071/E16 949 SQ. FT.
Part of Lots 5 & 6 in Block 6 in Halsted Park Subdivision.
Temporary Easement for Grading and Shaping.

David E. Sapp & Sandra D. Nicklos
PARCEL 072/E16 2,273 SQ. FT.
Part of Lots 1, 2, 3 & 4 in Block 6 in Halsted Park Subdivision.
Temporary Easement for Grading and Shaping.

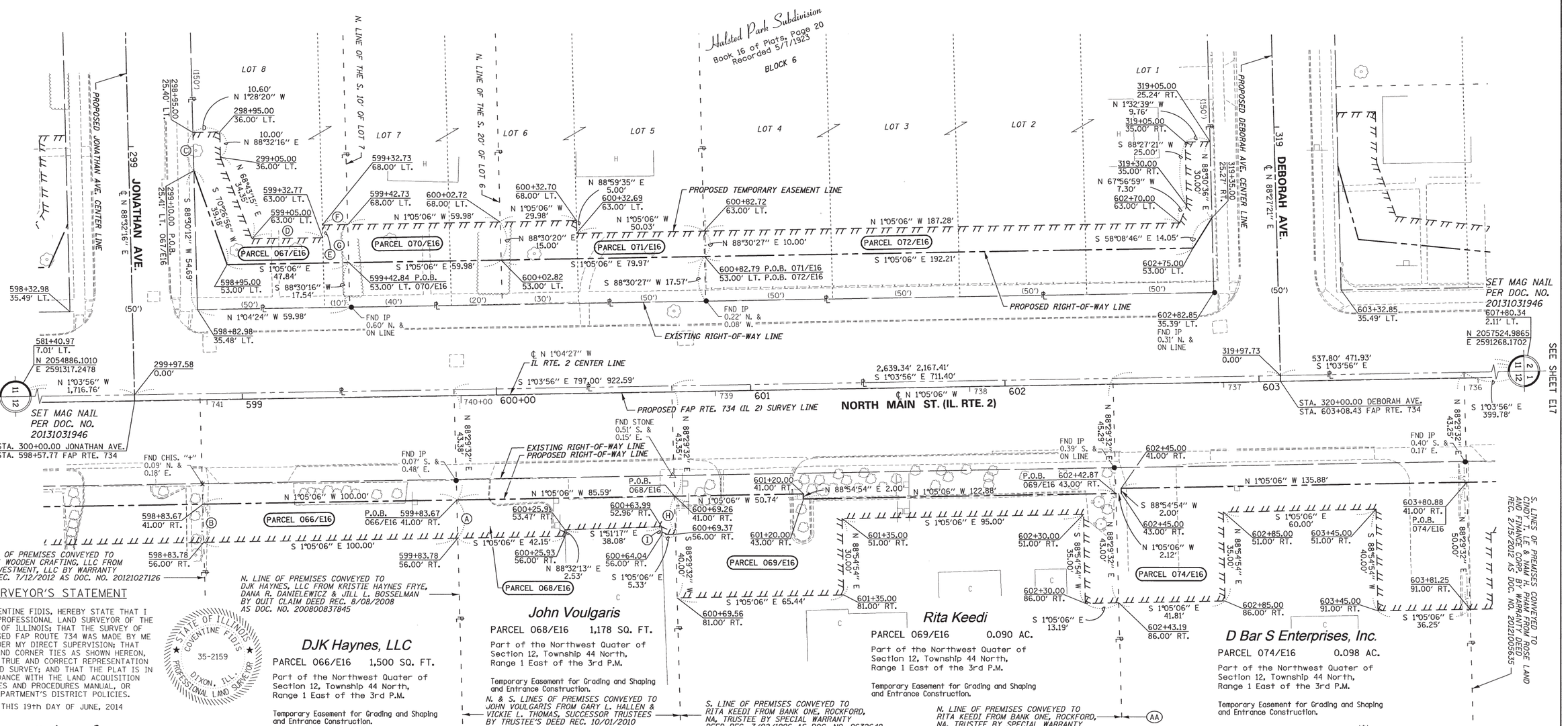

SURVEYOR'S STATEMENT

I, COVENTINE FIDIS, HEREBY STATE THAT I AM A PROFESSIONAL LAND SURVEYOR OF THE STATE OF ILLINOIS; THAT THE SURVEY OF PROPOSED FAP ROUTE 734 WAS MADE BY ME OR UNDER MY DIRECT SUPERVISION; THAT THE LAND CORNER TIES AS SHOWN HEREON, ARE A TRUE AND CORRECT REPRESENTATION OF SAID SURVEY; AND THAT THE PLAT IS IN ACCORDANCE WITH THE LAND ACQUISITION POLICIES AND PROCEDURES MANUAL, OR THE DEPARTMENT'S DISTRICT POLICIES.

DATED THIS 19th DAY OF JUNE, 2014

STATE OF ILLINOIS · COVENTINE FIDIS · 35-2159 · DIXON, ILL. · PROFESSIONAL LAND SURVEYOR

COVENTINE FIDIS - ILLINOIS PROFESSIONAL LAND SURVEYOR NO. 35-2159
MY LICENSE EXPIRES 11/30/14

Notes: BEARINGS BASED ON SURVEY CONTROL DATA AS PROVIDED BY IDOT.
PROJECT DATUM IS NAD83(97) ILLINOIS STATE PLANE COORDINATES, WEST ZONE.
GROUND DISTANCE = THE PROJECT COMBINATION FACTOR OF 1.000009398 X GRID DISTANCE.
ALL BEARINGS AND DISTANCES SHOWN HEREON ARE BASED ON "GRID COORDINATES".

AMERICAN SURVEYING & ENGINEERING, P.C.
841 N. Galena Ave. Dixon, IL 61021
815-288-6231
ILLINOIS PROFESSIONAL DESIGN FIRM NO. 184-003192
ASE JOB # 112119

FILE NAME = D264C21-sht-rowplat16E.dgn	USER NAME =	DESIGNED - GB	REVISED -	ILLINOIS DEPARTMENT OF TRANSPORTATION EASEMENT PLAT	FAP RTE 734 (IL 2)	LAND SECTION 11 & 12	COUNTY WINNEBAGO JOB# R-92-002-10
DRAWER 48 FOLDER 4		DRAWN - CH	REVISED -		SEC 78R-2	T 44 N, R 1 E OF 3RD P.M.	PROJECT# Sheet 600 of 926
	PLOT SCALE = 1″=20′	CHECKED - CF	REVISED -		SCALE: 1″ = 20′	SHEET NO. E16	STA 599+00 TO STA 603+80 CONTRACT NO. 64C21
	PLOT DATE = -	DATE - -	REVISED -				

SEP 15 2014