F.A.U. ROUTE NO.	SECTION	COUNTY	TOTAL SHEETS	SHEET NO.
2552	*	DUPAGE	53	356
FED. ROAD DIST. NO.		ILLINOIS	FED.	

SHEET NO. - 42

50 - SHEETS

* 00-00114-00-PV CONTRACT NO. 63024

When cantilever forming brackets are used, the work shall be done according to Article 503.06 (b) of the Standard Specifications, except as modified below and in the details shown on this sheet.

The finishing machine rails shall be placed on the top flange of the exterior beams.

The beams or girders, supporting cantilever forming brackets, shall be tied together at 4 foot intervals.

For Standard construction, or Stage Construction the Hardwood bracing materials shall be placed as shown between webs of beams in each bay.

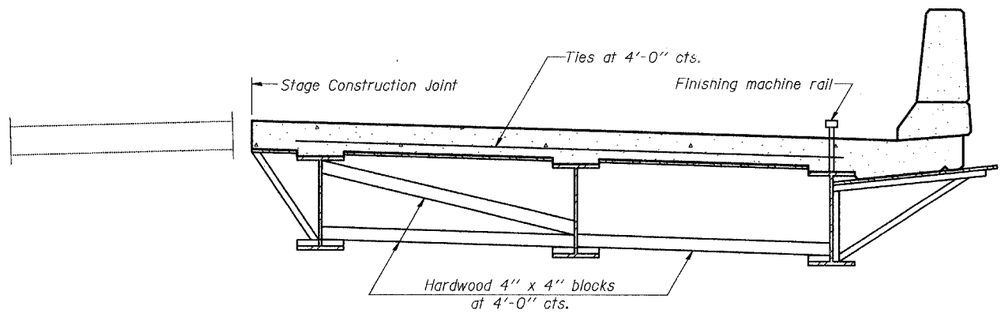

FORM BRACES FOR
STAGE CONSTRUCTION

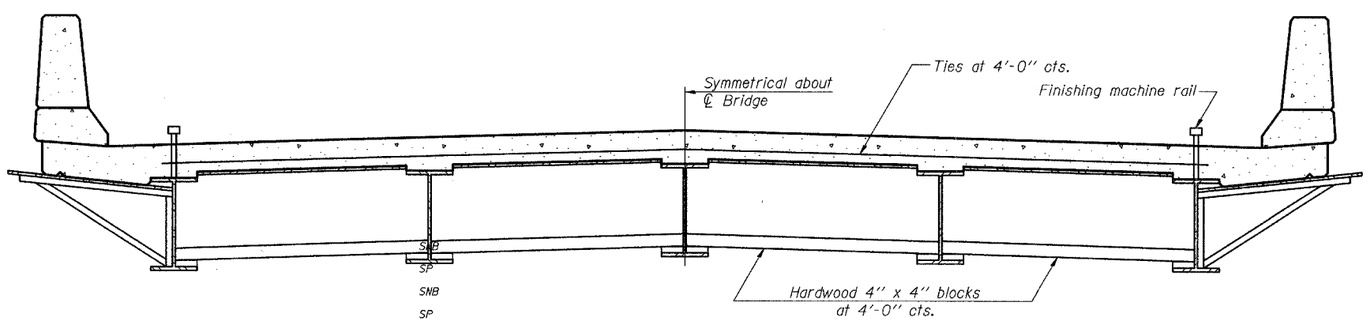

FORM BRACES FOR
STANDARD CONSTRUCTION

TY·LIN INTERNATIONAL

DESIGNED	PL
CHECKED	SP
DRAWN	PL
CHECKED	SP

REVISIONS	
NAME	DATE

CANTILEVER FORMING BRACKETS

75th STREET OVER THE
WEST BRANCH OF THE DUPAGE RIVER
FAP 369
SECTION 00-00114-00-PV STA. 151+38.03
DUPAGE COUNTY
S.N. 022-3118