F.A.U. ROUTE NO.	SECTION	COUNTY	TOTAL SHEETS	SHEET NO.
2552	•	DUPAGE	563	402
FED. ROAD DIST. NO.		ILLINOIS	FED. AID PROJECT-	

SHEET NO. - 5
13 - SHEETS

• 00-00114-00-PV CONTRACT NO. 63024

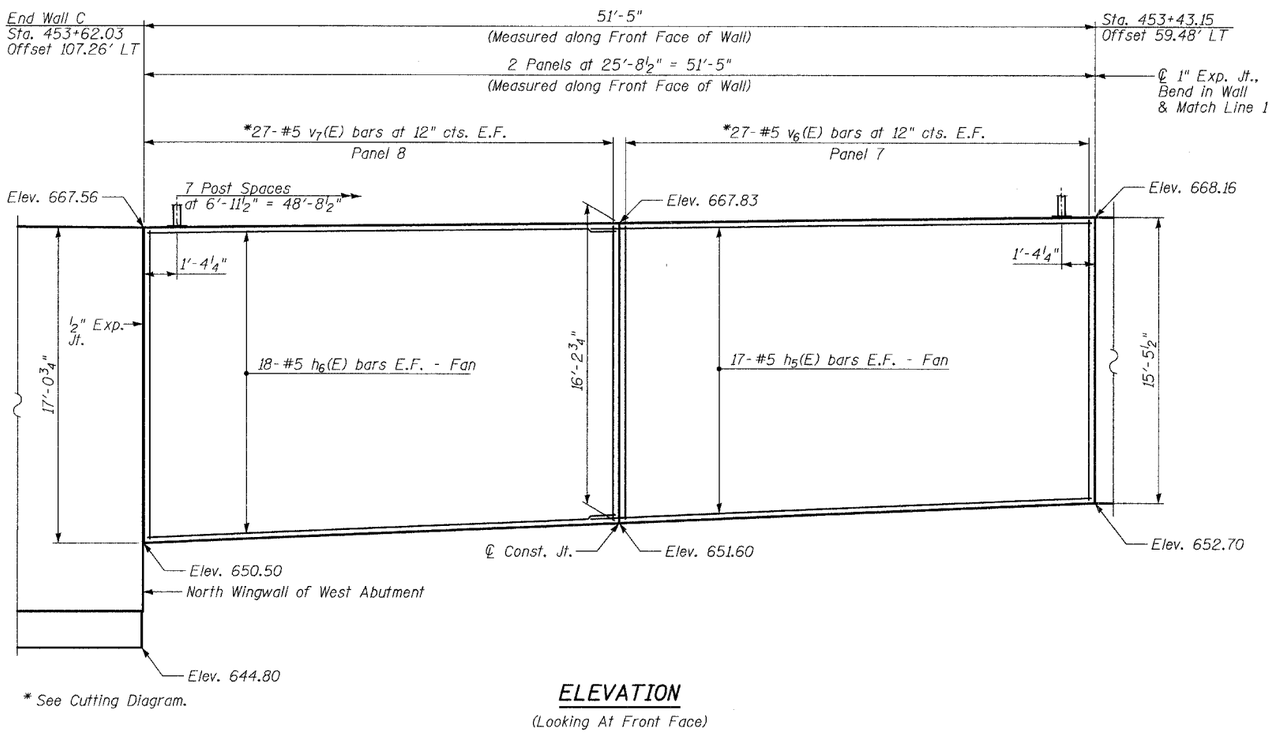

* See Cutting Diagram.

ELEVATION

(Looking At Front Face)

BAR TABLE SCHEDULE

Bar	No. of Sets Req'd	No. of Bars Per Set	A	B	C
v(E)	1	29	4'-3"	8'-2"	12'-5"
v_1(E)	1	29	8'-2"	11'-9"	19'-11"
v_2(E)	1	29	11'-9"	15'-4"	27'-1"
v_3(E)	1	27	16'-2"	13'-11"	30'-1"
v_4(E)	1	27	13'-11"	15'-2"	29'-1"
v_6(E)	1	27	15'-2"	15'-11"	31'-1"
v_7(E)	1	27	15'-11"	16'-9"	32'-8"

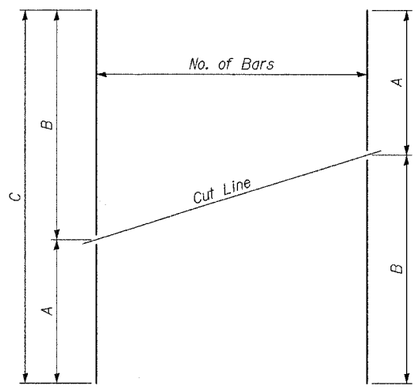

SERIES OF BAR CUTTING DIAGRAM

See table for dimensions.
Make all cuts normal to bar axis

WALL C
BILL OF MATERIAL

Bar	No.	Size	Length	Shape
h(E)	86	#5	28'-10"	
h_1(E)	26	#5	30'-3"	
h_2(E)	32	#5	27'-9"	
h_3(E)	32	#5	26'-2"	
h_4(E)	16	#5	3'-0"	
h_5(E)	34	#5	27'-11"	
h_6(E)	36	#5	25'-4"	
h_7(E)	4	#6	11'-4"	
v(E)	29	#4	12'-5"	
v_1(E)	29	#4	19'-11"	
v_2(E)	29	#4	27'-1"	
v_3(E)	27	#5	30'-1"	
v_4(E)	27	#5	29'-1"	
v_5(E)	54	#5	15'-1"	
v_6(E)	27	#5	31'-1"	
v_7(E)	27	#5	32'-8"	
Structure Excavation			CU YD	359
* Rock Excavation for Structures			CU YD	3
Concrete Structures			CU YD	121
Protective Coat			SQ YD	83
Form Liner Textured Surface			SQ YD	288
Stud Shear Connectors			EACH	304
Untreated Timber Lagging			SQ FT	2,078
Reinforcement Bars, Epoxy Coated			LB	12,730
Furnishing Soldier Piles (HP Section)			FT	128
Furnishing Soldier Piles (W Section)			FT	321
Geocomposite Wall Drain			SQ YD	231
Pipe Underdrains for Structures, 4"			FT	228
Drilling and Setting Soldier Piles (in Soil)			CU FT	1,792
Drilling and Setting Soldier Piles (in Rock)			CU FT	963
Parapet Railing, Special			FT	216
Anti-Graffiti Coating			SQ FT	2,592

* Applicable at locations where rock excavation is necessary to place underdrains and concrete facing.

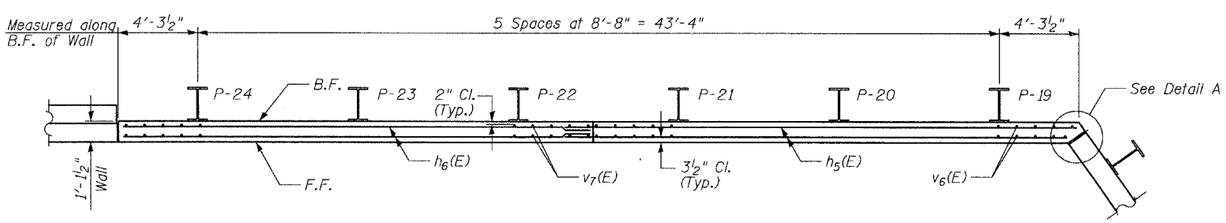

PLAN

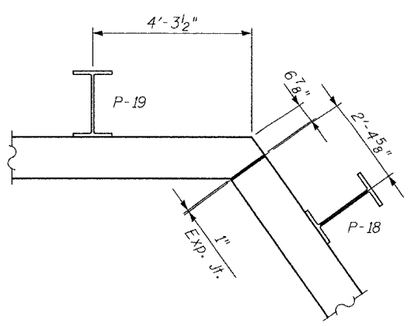

DETAIL A

NOTES:

1. B.F. denotes Back Face.
2. E.F. denotes Each Face.
3. F.F. denotes Front Face.
4. Work this sheet with Sheets 3 & 4 of 13.
5. Pile spacing measured along back face of wall.
6. Offsets are measured from the ℄ NB Washington St. to the front face of wall.
7. See Sheet 8 of 13 for limits of architectural finish.
8. See Sheet 11 of 13 for railing details.

LAP SPLICES

Bar	Lap
#5	2'-2"

TYLIN INTERNATIONAL

DESIGNED -	TB
CHECKED -	SP
DRAWN -	TB
CHECKED -	SP

REVISIONS	
NAME	DATE

WALL C
PLAN & ELEVATION
STA. 453+43.15 TO STA. 453+62.03

WASHINGTON - 75TH STREET
F.A.U. ROUTE 2552
SECTION 00-00114-00-PV
DUPAGE COUNTY

\75wallcore3.dgn 4/10/2008 1:15:15 PM